MegaDrive

Intelligent Drive Solutions

Wersja PL EN version

Katalog motoreduktorów i przekładni
serii **MDR, MDF, MDK i MDS**

Catalog of gearmotors and gear units
MDR, MDF, MDK i MDS *series*

MegaDrive
Intelligent Drive Solutions

O MegaDrive

MegaDrive jest polską firmą, oferującą kompleksowe rozwiązania w zakresie techniki napędowej dedykowanej dla przemysłu i nie tylko.

Oferuje indywidualnie dopasowywane do oczekiwań odbiorców rozwiązania techniczne, zachowując przy tym krótki czas realizacji dostaw. Korzystając z wieloletniego doświadczenia techników realizuje profesjonalny serwis gwarancyjny oraz pogwarancyjny.

MegaDrive dostarcza tylko wysokiej jakości produkty oparte na sprawdzonych podzespołach kwalifikowanych producentów.

Szeroko zaopatrzony magazyn podzespołów oraz wyrobów gotowych jest podstawą krótkiego czasu realizacji zamówień, dużej elastyczności oferty oraz szerokiej gamy dostępnych wariantów.

About MegaDrive

MegaDrive is a Polish company offering comprehensive solutions in the field of drive transmission technology.

We offer individual tailored technical solutions to our customers at the same time maintaining a short delivery time. We base our strength on many years of experience in serving our customers. We provide professional warranty and post-warranty service.

MegaDrive delivers only high quality products based on verified components from authorized manufacturers.

An extensive warehouse of components and finished products set the foundation for short delivery time and high flexibility of the offer and a wide range of available variants.

SPIS TREŚCI

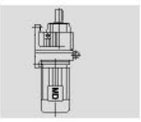
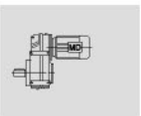
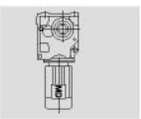
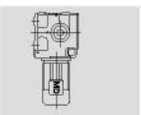

TABLE OF CONTENTS

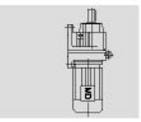
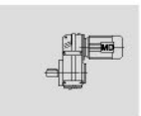
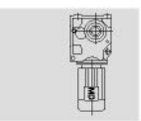
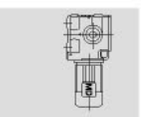

1. Zdjęcia produktów
1. Product pictures

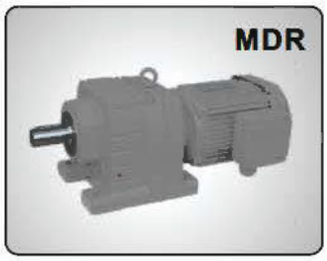

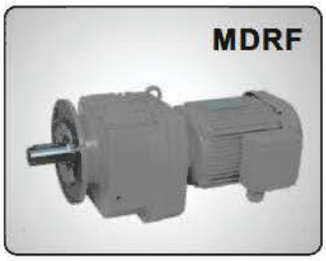

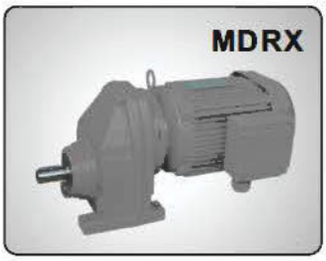

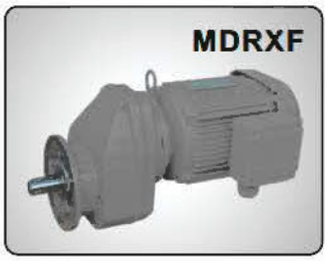

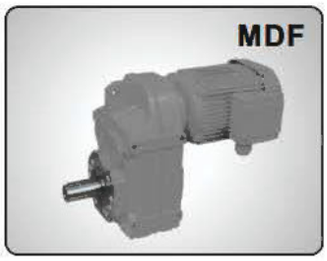

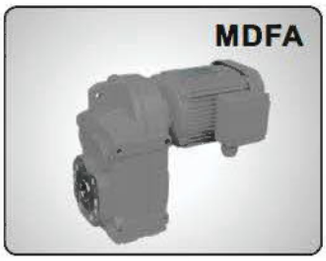

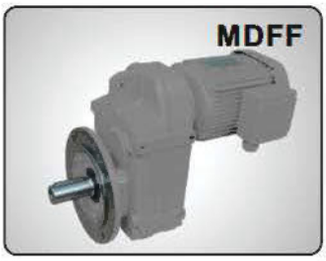

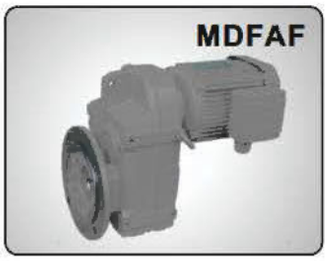

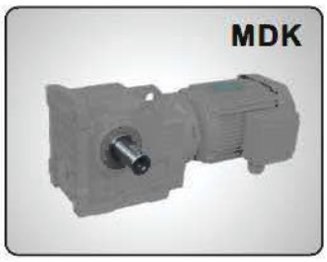

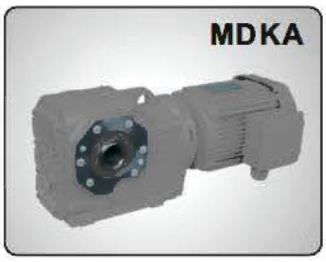

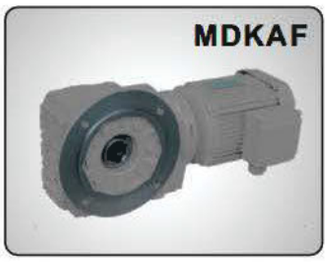

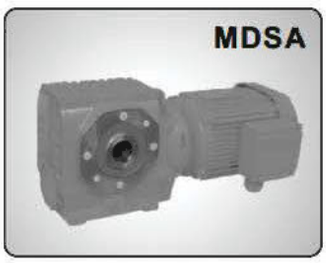

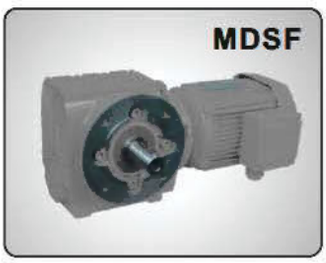

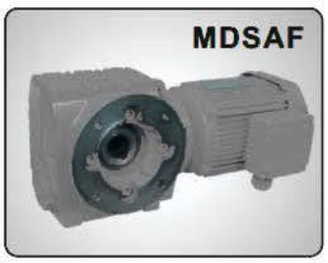

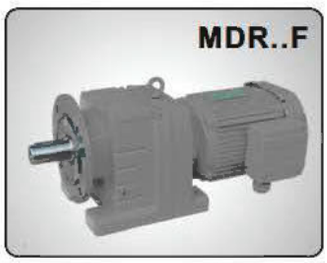

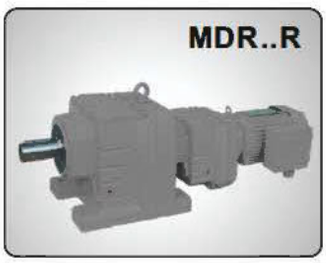

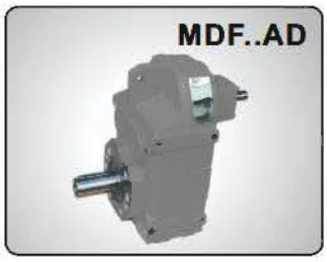

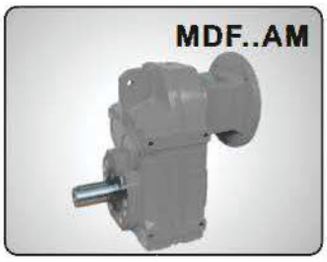

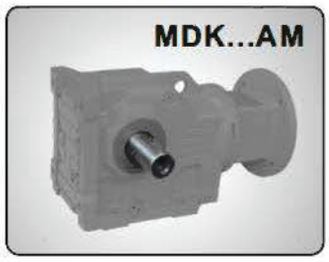

2. Opis produktów

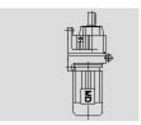

Produkty katalogowe

Niniejsze opracowanie przedstawia katalog standardowych wykonań przekładni i motoreduktorów modułowych będących w ofercie MegaDrive. Produkty te posiadają zgodność wymiarową z najpopularniejszymi standardami wymiarów przyłączeniowych napędów w nowoczesnym przemyśle.

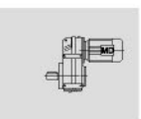

Przekładnie walcowe MDR

Przekładnie tej serii to klasyczne rozwiązanie napędu osiowego, oferujące optymalny stosunek momentu obrotowego do masy własnej. Dzięki niewielkim rozmiarom i wysokiej sprawności idealnie sprawdzą się w każdej aplikacji.

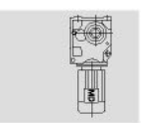

MegaDrive oferuje 6 wielkości mechanicznych przekładni jednostopniowych o oznaczeniu MDRX oraz 15 wielkości dwu- i trójstopniowych o oznaczeniu MDR. Zakres momentu obrotowego od 70 Nm do aż 50000 Nm jest niezwykle rzadko spotykany na rynku w podobnej serii. Imponujący jest zakres przełożeń od i=1,3 do i=29180.

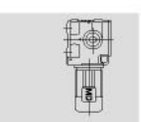

Opcjonalne mocowania korpusu łapowe, kołnierzowe, łapowo-kołnierzowe, lub wykonanie z przedłużoną piastą wzmocnionego łożyskowania wału wyjściowego pozwalają na uniwersalne zastosowania w budowie maszyn.

Przekładnie walcowe płaskie MDF

Przekładnie i motoreduktory płaskie serii MDF stanowią bardzo wydajne i kompaktowe rozwiązanie napędu o przesuniętych osiach, charakteryzujące się szerokim zakresem momentu obrotowego od 200 Nm do 50000 Nm. Przekładnie zaprojektowane głównie jako jednostki do zawieszenia na wale są niezwykle proste w instalacji, a dzięki swoim małym gabarytom doskonale nadają się do wielu aplikacji, również w mocowaniu łapowym i kołnierzowym.

Przekładnie walcowo-stożkowe MDK

Motoreduktory i przekładnie walcowo–stożkowe serii MDK stanowią najsprawniejsze rozwiązanie kątowego przeniesienia napędu. Spełniają większość wymagań konstrukcyjnych w zakresie mocy do 200 kW przy maksymalnym momencie obrotowym wyjściowym wynoszącym do 50,000 Nm. Konstrukcja przekładni gwarantuje przenoszenie przez ich wały wysokich obciążeń osiowych i promieniowych dzięki czemu doskonale sprawdzają się w zastosowaniach w przemyśle ciężkim. Przekładnie te charakteryzują się długą żywotnością i łatwością w konserwacji.

Przekładnie walcowo-ślimakowe MDS

Przekładnie i motoreduktory w 7 wielkościach, do przenoszenia dużych przeciążeń eksploatacyjnych. Charakteryzują się niską emisją hałasu. Zastosowanie wejściowego przełożenia walcowego przekłada się na wyższą sprawność w stosunku do innych przekładni ślimakowych z porównywalnym przełożeniem. Montaż w wielu opcjach.

Rozwiązania motoreduktorów

Motoreduktory na bazie przekładni modułowych wykonywane są w wersji łączonej z silnikami uniwersalnymi IEC oraz z silnikami zintegrowanymi.

Przy pierwszym rozwiązaniu szeroka gama dostępnych silników znormalizowanych pozwala na optymalne dobranie energooszczędnego motoreduktora do niemalże każdego zastosowania. MegaDrive posiada w ofercie silniki według każdej obowiązującej klasy sprawności, zgodnie z IEC 60034: IE1, IE2, Premium IE3, jak również silniki klasy Super Premium IE4. Jest to odpowiedź firmy na rozwój międzynarodowej polityki proekologicznej. Ponadto posiada bogatą ofertę silników z hamulcem, niezależnym chłodzeniem, enkoderem jak i każdym innym wymaganym wyposażeniem. Oferta silników trójfazowych MegaDrive jest konkurencyjna cenowo a zarazem spełniająca wymagania najważniejszych obowiązujących globalnie standardów.

Motoreduktory z silnikami zintegrowanymi są zaprojektowane i zoptymalizowane pod kątem wymiarów. Sprawdzają się szczególnie przy konstrukcjach z bardzo ograniczonym miejscem montażu.

2. Product description

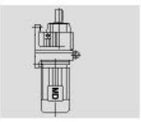

Catalog products

This catalog presents standard versions of modular gearboxes and gearmotors in the MegaDrive offer. The products are in line with the most popular connection dimensions standards in modern industry.

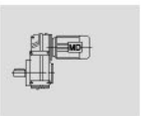

MDR helical gear units

The MDR series is classic solution of coaxial drive offering the optimal torque to weight ratio. Thanks to their small size and high efficiency, they are ideal for any application.

MegaDrive offer 6 sizes of single-stage gearboxes in designation MDRX and 15 two-stage and three-stage in designation MDR. The torque range from 70 Nm up to 50,000 Nm is extremely rare on the market in similar series. Impressive the gear unit ratio from i=1.3 to i=29180.

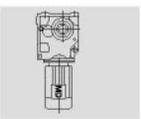

The optional mounting foot, flange, foot-flange, or version with extended hub with reinforced bearing on the output shaft give universal application for the machines.

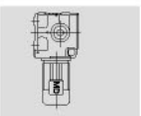

MDF parallel shaft helical gear unit

MDF series gearboxes are a very efficient and compact drive solution with offset axes, with a wide torque range from 200 Nm to 50,000 Nm. These gearboxes are designed mainly as a shaft mounting unit which makes it extremely easy to install and thanks to its small overall dimensions they are perfectly suitable for many applications also in flange and foot mounting.

Helical-bevel gears of the MDK series

MDK gearboxes are the most efficient solution for angular drive transfer. They meet most design requirements in the power range up to 200 kW with a maximum output torque of up to 50,000 Nm. The design of the transmission guarantees that their shafts can carry high axial and radial loads due to which they are perfectly suited for heavy duty industry applications. These gearboxes are characterized by long life and easy maintenance.

MDS helical-worm gear units

These gearboxes come in 7 sizes, all for the purpose of carrying heavy operating overloads. They are characterized by low noise emission. The use of an input helical ratio contributes to a higher efficiency compared to other worm gears with a comparable transmission ratio. Installations are possible in many options.

Motoreducers solutions

Our modular gearboxes are made to be either combined with an IEC universal motor or with one of our integrated motors.

In the first solution a wide range of available standard motors allows for an optimal selection of an energy-saving geared motor for almost every application. MegaDrive offers motors in each applicable efficiency class in accordance with IEC 60034: IE1, IE2, Premium IE3, as well as Super Premium IE4 motors. This is our response to the development of international pro-ecological policy. In addition, we have a wide range of motors with brakes, independent cooling, encoders and any other required equipment. The offer of three-phase MegaDrive motors is competitively priced and at the same time it meets the requirements of all the most important global standards.

Motoreducers with integrated motors are designed and optimized for smaller dimensions. They are particularly suitable for applications with a very limited assembly space.

Work with a Polish company

3. Opis ogólny

3. Model notes

3.1. Oznaczenia jednostek

3.1. Type designations

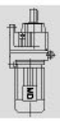

MD R F 67 II DS 80 S 4 / BE / HF / TF / 128.97 / M1 / 180°

1 2 3 4 5 6 7 8 9 10 11 12 13 14 15

1 Kod producenta
MD - MegaDrive Sp. z o.o.

2 Seria
R - przekładnia walcowa prosta

3 Wersja mocowania
[-] - montaż łapowy
F - montaż kołnierzowy
..F - montaż łapowo-kołnierzowy
M - montaż kołnierzowy z przedłużoną piastą łożyska
X - jednostopn. wersja na łapach
XF - jednostopniowa wersja z kołnierzem B5

4 Wielkość przekładni
67 - wielkość 67

5 Wielkość kołnierza
I lub [-] - kołnierz standardowy rozmiar I
II - kołnierz rozmiar II
III - kołnierz rozmiar III

6 Typ silnika
DS - silnik zintegrowany trójfazowy asynchroniczny, klasa sprawności IE2
AM - adapter przyłączeniowy do silnika IEC[1)]

7 Wielkość silnika
80 - wielkość mechaniczna silnika

8 Długość stojana
S, M, L

9 Liczba biegunów
4 - 4 bieguny silnika

10 Hamulec
[-] - brak hamulca silnika
BE - z hamulcem silnika

11 Luzownik hamulca
[-] - bez luzownika
HF - luzownik z opcją blokowania
HR - luzownik samoczynnie powracający

12 Ochrona termiczna
[-] - brak termistora
TF - termistor typu PTC
TH - czujnik bimetalowy

13 Przełożenie
128.97 - przełożenie 128.97

14 Pozycja montażu
M1 - pozycja montażu M1

15 Pozycja skrzynki zaciskowej
[-] - pozycja skrzynki 0°
180° - pozycja skrzynki 180°

[1)] W przypadku motoreduktora z silnikiem IEC oznaczenia symboli od poz. 7 powyżej mogą występować inne, w zależności od rodzaju zastosowanego silnika IEC.

MD R F 67 II DS 80 S 4 / BE / HF / TF / 128.97 / M1 / 180°

1 2 3 4 5 6 7 8 9 10 11 12 13 14 15

1 Enterprise code
MD - MegaDrive Sp. z o.o.

2 Product code
R - Helical gearmotor

3 Installation type
[-] - foot-mounted
F - flange-mounted
..F - foot and flange-mounted
M - flange mounted with extended bearing housing
X - single-stage foot-mounted
XF - single-stage flange-mounted

4 Gear unit size
67 - gear unit size 67

5 Flange size
I or [-] - standard flange size I
II - flange size II
III - flange size III

6 Electric motor
DS - three phase integrated asynchronous motor IE2 class
AM - input adapter IEC[1)]

7 Motor frame size
80 - motor center height

8 Stator length
S, M, L

9 Number of poles
4 - 4 poles

10 Brake
[-] - no brakes
BE - brakes

11 Brake release
[-] - no brake release
HF - screw release (lock in the brake release position)
HR - handle release (automatic braking position)

12 Thermal protection
[-] - no thermistor
TF - thermistor protection (PTC)
TH - thermistor protection (bimetal switch)

13 Ratio
128.97 - ratio 128.97

14 Mounting position
M1 - mounting position M1

15 Terminal box position
[-] - terminal box position is 0°
180° - terminal box position is 180°

[1)] In case of IEC gearmotor, descriptions from 7. up can be different, depend on electric motor IEC.

MD F A 67 / G DS 80 S 4 / BE / HF / TF / 109.04 / M1 / 180°

1 2 3 4 5 6 7 8 9 10 11 12 13 14 15

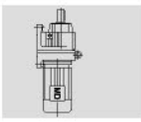
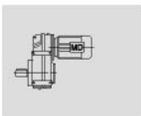
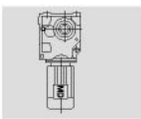
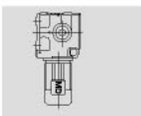

1 Kod producenta
MD - MegaDrive Sp. z o.o.

2 Seria
F - przekładnia płaska

3 Wersja mocowania
[-] - montaż łapowy
F - montaż kołnierzowy
A - wał drążony z rowkiem wpustowym
AF - wał drążony z rowkiem wpustowym i kołnierz

4 Wielkość przekładni
67 - wielkość 67

5 Ramię reakcyjne
[-] - brak ramienia reakcyjn.
G - z ramieniem reakcyjnym

6 Typ silnika
DS - silnik zintegrowany trójfazowy asynchroniczny, klasa sprawności IE2
AM - adapter przyłączeniowy do silnika IEC[1)]

7 Wielkość silnika
80 - wielkość mechaniczna silnika

8 Długość stojana
S, M, L

9 Liczba biegunów
4 - 4 bieguny silnika

10 Hamulec
[-] - brak hamulca silnika
BE - z hamulcem silnika

11 Luzownik hamulca
[-] - bez luzownika
HF - luzownik z opcją blokowania
HR - luzownik samoczynnie powracający

12 Ochrona termiczna
[-] - brak termistora
TF - termistor typu PTC
TH - czujnik bimetalowy

13 Przełożenie
109.04 - przełożenie 109.04

14 Pozycja montażu
M1 - pozycja montażu M1

15 Pozycja skrzynki zaciskowej
[-] - pozycja skrzynki 0°
180° - pozycja skrzynki 180°

[1)] W przypadku motoreduktora z silnikiem IEC oznaczenia symboli od poz. 7 powyżej mogą występować inne, w zależności od rodzaju zastosowanego silnika IEC.

MD F A 67 / G DS 80 S 4 / BE / HF / TF / 109.04 / M1 / 180°

1 2 3 4 5 6 7 8 9 10 11 12 13 14 15

1 *Enterprise code*
MD - MegaDrive Sp. z o.o.

2 *Product code*
F - Parallel shaft helical gearmotor

3 *Installation type*
[-] - foot-mounted
F - flange-mounted
A - hollow shaft mounted
AF - flange-mounted with hollow shaft

4 *Gear unit size*
67 - gear unit size 67

5 *Torque arm*
[-] - no torque arm
G - torque arm

6 *Electric motor*
DS - three phase integrated asynchronous motor IE2 class
AM - input adapter IEC[1)]

7 *Frame size*
80 - motor center height

8 *Stator length*
S, M, L

9 *Number of poles*
4 - 4 poles

10 *Brake*
[-] - no brakes
BE - brakes

11 *Brake release*
[-] - no brake release
HF - screw release (lock in the brake release position)
HR - handle release (automatic braking position)

12 *Thermal protection*
[-] - no thermistor
TF - thermistor protection (PTC)
TH - thermistor protection (bimetal switch)

13 *Ratio*
109.04 - ratio 109.04

14 *Mounting position*
M1 - mounting position M1

15 *Terminal box position*
[-] - terminal box position is 0°
180° - terminal box position is 180°

[1)] In case of IEC gearmotor, descriptions from 7. up can be different, depend on electric motor IEC.

MD K A 67 / T DS 80 S 4 / BE / HF / TF / 108.03 / B / M1 / 180°

1 2 3 4 5 6 7 8 9 10 11 12 13 14 15 16

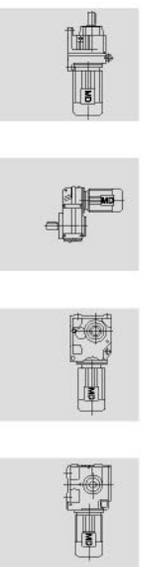

1 Kod producenta
MD - MegaDrive Sp. z o.o.

2 Seria
K - przekładnia walcowo-stożkowa

3 Wersja mocowania
[-] - montaż łapowy
F - montaż kołnierzowy
A - wał drążony z rowkiem wpustowym
AF - wał drążony z rowkiem wpustowym i kołnierz

4 Wielkość przekładni
67 - wielkość 67

5 Ramię reakcyjne
[-] - brak ramienia reakcyjn.
T - z ramieniem reakcyjnym

6 Typ silnika
DS - silnik zintegrowany trójfazowy asynchroniczny, klasa sprawności IE2
AM - adapter przyłączeniowy do silnika IEC[1)]

7 Wielkość silnika
80 - wielkość mechaniczna silnika

8 Długość stojana
S, M, L

9 Liczba biegunów
4 - 4 bieguny silnika

10 Hamulec
[-] - brak hamulca silnika
BE - z hamulcem silnika

11 Luzownik hamulca
[-] - bez luzownika
HF - luzownik z opcją blokowania
HR - luzownik samoczynnie powracający

12 Ochrona termiczna
[-] - brak termistora
TF - termistor typu PTC
TH - czujnik bimetalowy

13 Przełożenie
108.03 - przełożenie 108.03

14 Pozycja wału wyjściowego
A - wał strona A
B - wał strona B
AB - wał strona A i B

15 Pozycja montażu
M1 - pozycja montażu M1

16 Pozycja skrzynki zaciskowej
[-] - pozycja skrzynki 0°
180° - pozycja skrzynki 180°

[1)] W przypadku motoreduktora z silnikiem IEC oznaczenia symboli od poz. 7 powyżej mogą występować inne, w zależności od rodzaju zastosowanego silnika IEC.

MD K A 67 / T DS 80 S 4 / BE / HF / TF / 108.03 / B / M1 / 180°

1 2 3 4 5 6 7 8 9 10 11 12 13 14 15 16

1 *Enterprise code*
MD - MegaDrive Sp. z o.o.

2 *Product code*
K - Helical-bevel gearmotor

3 *Installation type*
[-] - foot-mounted
F - flange-mounted
A - hollow shaft mounted
AF - flange-mounted with hollow shaft

4 *Gear unit size*
67 - gear unit size 67

5 *Torque arm*
[-] - no torque arm
T - torque arm

6 *Electric motor*
DS - three phase integrated asynchronous motor IE2 class
AM - input adapter IEC[1)]

7 *Frame size*
80 - motor center height

8 *Stator length*
S, M, L

9 *Number of poles*
4 - 4 poles

10 *Brake*
[-] - no brakes
BE - brakes

11 *Brake release*
[-] - no brake release
HF - screw release (lock in the brake release position)
HR - handle release (automatic braking position)

12 *Thermal protection*
[-] - no thermistor
TF - thermistor protection (PTC)
TH - thermistor protection (bimetal switch)

13 *Ratio*
108.03 - ratio 108.03

14 *Position of the output shaft*
A - shaft with A
B - shaft with B
AB - shaft with A+B

15 *Mounting position*
M1 - mounting position M1

16 *Terminal box position*
[-] - terminal box position is 0°
180° - terminal box position is 180°

[1)] In case of IEC gearmotor, descriptions from 7. up can be different, depend on electric motor IEC.

MD S A 67 / T DS 80 S 4 / BE / HF / TF / 106.75 / d45 / B / M1 / 180°

1 2 3 4 5 6 7 8 9 10 11 12 13 14 15 16 17

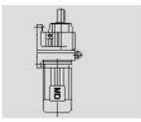
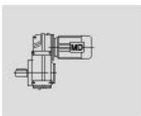
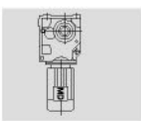
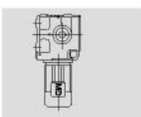

1 Kod producenta
MD - MegaDrive Sp. z o.o.

2 Seria
S - przekładnia walcowo-ślimakowa

3 Wersja mocowania
[-] - montaż łapowy
F - montaż kołnierzowy
A - wał drążony z rowkiem wpustowym
AF - wał drążony z rowkiem wpustowym i kołnierz

4 Wielkość przekładni
67 - wielkość 67

5 Ramię reakcyjne
[-] - brak ramienia reakcyjn.
T - z ramieniem reakcyjnym

6 Typ silnika
DS - silnik zintegrowany trójfazowy asynchroniczny, klasa sprawności IE2
AM - adapter przyłączeniowy do silnika IEC[1)]

7 Wielkość silnika
80 - wielkość mechaniczna silnika

8 Długość stojana
S, M, L

9 Liczba biegunów
4 - 4 bieguny silnika

10 Hamulec
[-] - brak hamulca silnika
BE - z hamulcem silnika

11 Luzownik hamulca
[-] - bez luzownika
HF - luzownik z opcją blokowania
HR - luzownik samoczynnie powracający

12 Ochrona termiczna
[-] - brak termistora
TF - termistor typu PTC
TH - czujnik bimetalowy

13 Przełożenie
106.75 - przełożenie 106.75

14 Średnica wału drążonego
d45 - średnica wału drążonego wynosi 45mm

15 Pozycja wału wyjściowego
A - wał strona A
B - wał strona B
AB - wał strona A i B

16 Pozycja montażu
M1 - pozycja montażu M1

17 Pozycja skrzynki zaciskowej
[-] - pozycja skrzynki 0°
180° - pozycja skrzynki 180°

[1)] W przypadku motoreduktora z silnikiem IEC oznaczenia symboli od poz. 7 powyżej mogą występować inne, w zależności od rodzaju zastosowanego silnika IEC.

MD S A 67 / T DS 80 S 4 / BE / HF / TF / 106.75 / d45 / B / M1 / 180°

1 2 3 4 5 6 7 8 9 10 11 12 13 14 15 16 17

1 *Enterprise code*
MD - MegaDrive Sp. z o.o.

2 *Product code*
S - Helical-worm gearmotor

3 *Installation type*
[-] - foot-mounted
F - flange-mounted
A - hollow shaft mounted
AF - flange-mounted with hollow shaft

4 *Gear unit size*
67 - gear unit size 67

5 *Torque arm*
[-] - no torque arm
T - torque arm

6 *Electric motor*
DS - three phase integrated asynchronous motor IE2 class
AM - input adapter IEC[1)]

7 *Frame size*
80 - motor center height

8 *Stator length*
S, M, L

9 *Number of poles*
4 - 4 poles

10 *Brake*
[-] - no brakes
BE - brakes

11 *Brake release*
[-] - no brake release
HF - screw release (lock in the brake release position)
HR - handle release (automatic braking position)

12 *Thermal protection*
[-] - no thermistor
TF - thermistor protection (PTC)
TH - thermistor protection (bimetal switch)

13 *Ratio*
106.75 - ratio 106.75

14 *Hollow shaft diameter*
d45 - hollow shaft diameter is 45 mm

15 *Position of the output shaft*
A - shaft with A
B - shaft with B
AB - shaft with A+B

16 *Mounting position*
M1 - mounting position M1

17 *Terminal box position*
[-] - terminal box position is 0°
180° - terminal box position is 180°

[1)] In case of IEC gearmotor, descriptions from 7. up can be different, depend on electric motor IEC.

3.2. Typy motoreduktorów
3.2. Type of gearmotors

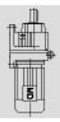

Motoreduktory serii MDR/F/K/S
MDR/F/K/S series gearmotors

W tabeli poniżej zostały ujęte dostępne typy motoreduktorów wraz z wersjami mocowania.

There are the types of helical (R), parallel shaft helical (F), helical-bevel (K) and helical-worm (S) gearmotors that we can supply. See installation types below.

Wersja mocowania *Installation type*	Typ motoreduktora *(gearmotor type)*			
	MDR	MDF	MDK	MDS
Montaż łapowy *foot mounted*	•	•	•	•
Montaż kołnierzowy *B5 flange mounted*	•	•	•	•
Montaż łapowo-kołnierzowy *foot and B5 flange mounted*	• 2)	•	• 3)	—
Montaż na wale drążonym z rowkiem wpustowym *hollow shaft with key mounted*	—	•	• 1)	• 1)
Montaż na wale drążonym z pierścieniem zaciskowym *hollow shaft with shrink disk mounted*	—	•	• 1)	• 1)
Montaż na wale drążonym z wielowypustem *splined hollow shaft mounted*	—	•	• 1)	—
Montaż na wale drążonym z pierścieniem zaciskowym + łapy *hollow shaft with shrink disk + foot mounted*	—	•	•	—
Montaż na wale drążonym z rowkiem wpustowym + łapy *hollow shaft with key + foot mounted*	—	•	•	—
Montaż na wale drążonym z wielowypustem + łapy *splined hollow shaft + foot mounted*	—	•	•	—
Montaż na wale drążonym z rowkiem wpustowym + kołnierz B5 (AF) *hollow shaft with key + B5 flange mounted (AF)*	—	•	•	•
Montaż na wale drążonym z pierścieniem zaciskowym + kołnierz B5 (HF) *hollow shaft with shrink disk + B5 flange mounted (HF)*	—	•	•	•
Montaż na wale drążonym z wielowypustem + kołnierz B5 (VF) *splined hollow shaft + B5 flange mounted (VF)*	—	•	•	—
Montaż na wale drążonym z rowkiem wpustowym + kołnierz B14 (AZ) *hollow shaft with key + B14 flange mounted (AZ)*	—	•	•	•
Montaż na wale drążonym z pierścieniem zaciskowym + kołnierz B14 (HZ) *hollow shaft with shrink disk + B14 flange-mounted (HZ)*	—	•	•	•
Montaż na wale drążonym z wielowypustem + kołnierz B14 (VZ) *splined hollow shaft + B14 flange mounted (VZ)*	—	•	•	—

- • standardowa jednostka
- - nie występuje
- 1) możliwość użycia z ramieniem reakcyjnym
- 2) występuje tylko w wielkościach MDR17-MDR87
- 3) występuje tylko w wielkościach MDK127-MDK157

- *• the normal type*
- *- not available*
- *1) possibility to use the torque arm*
- *2) only used by MDR17-MDR87*
- *3) only used by MDK127-MDK157*

Motoreduktory wielostopniowe
Multi-stage gearmotors

Używanie podwójnych przekładni lub motoreduktorów pozwala na uzyskanie szczególnie niskich prędkości obrotowych na wyjściu przekładni. Rozwiązanie to polega na montażu od strony wejściowej przekładni lub motoreduktora zębatego, jako dodatkowej przekładni. W tym przypadku istotne jest ograniczenie mocy silnika, zgodnie z maksymalnym dopuszczalnym momentem obrotowym na wyjściu przekładni.

You can achieve particularly low output speed by using multi-stage gear units or multi stage gearmotors. This method involves mounting a helical gear unit on the input end as a second gear unit. It may be necessary to limit the motor power to match the maximum permitted output torque of the gear unit.

Przekładnie i motoreduktory MDRM
MDRM gear units & gearmotors

Seria MDRM oznacza specjalną wersję motoreduktorów zębatych walcowych z przedłużoną piastą łożyskową na wyjściu przekładni. Ich konstrukcja zapewnia wytrzymałość na duże siły poprzeczne i osiowe oraz momenty zginające, dlatego znajdują idealne zastosowanie w mieszadłach. Pozostałe dane techniczne są takie same, jak w przypadku standardowych motoreduktorów zębatych walcowych. Dodatkowe wskazówki dotyczące projektowania znajdują się w rozdziale "Projektowanie przy użyciu przekładni MDRM" (strona 28).

MDRM gear units and gearmotors are a special type of helical gear units with an extended output bearing hub. They were designed especially for agitating applications and allow for high overhung and axial loads and bending moments. Other data are the same as for standard helical gear unit (gearmotor). You can find special project planning notes for MDRM gear units in the chapter "Project planning procedure for MDRM gear units" (page 29).

Silniki z hamulcem
Brake motors

Na życzenie, silniki i motoreduktory MegaDrive mogą być dostarczone z wbudowanym mechanicznym hamulcem. Jest to elektromagnetyczny hamulec tarczowy wzbudzany prądem stałym, który zwalniany jest elektrycznie, a hamowanie następuje na skutek docisku sprężynowego. Hamulec jest skonstruowany w taki sposób, że hamowanie następuje automatycznie w przypadku wykrycia przerwy w dostawie prądu, spełniając tym podstawowe wymogi bezpieczeństwa. Hamulec może być także zwalniany ręcznie przy wyposażeniu w ręczny luzownik (z opcją blokowania, bądź samoczynnie powracający). Sterowanie hamulca odbywa się poprzez urządzenie sterujące, znajdujące sie w skrzynce przyłączeniowej silnika lub w szafie rozdzielczej.

On request, MD motors and gearmotors can be supplied with an integrated mechanical brake. The MD brake is an electromagnetic disk brake with a DC coil which is released electrically and braked using spring force. The design principle means the brake is applied if the power fails. This means it complies with fundamental safety requirements. The MD brake can also be released mechanically if fitted with manual brake release. For this purpose, either a hand lever or a setscrew can be locked. The brake is activated by a brake control system which is in the wiring switch cabinet.

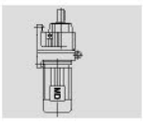

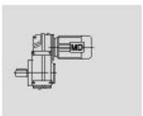

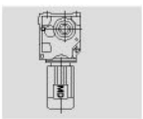

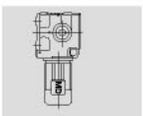

3.3. Oznaczenia wersji przekładni i opcje
3.3. Designs and options for gear units

Seria MDR - przekładnie walcowe proste
MDR series - helical gear units

MDR...	Montaż łapowy *Foot-mounted*
MDRF..	Montaż kołnierzowy *Flange-mounted*
MDR..F	Montaż łapowo-kołnierzowy *Foot and flange-mounted*
MDRM..	Montaż kołnierzowy z przedłużoną piastą łożyska *Flange-mounted with extended bearing housing*
MDRX..	Jednostopniowa wersja na łapach *Single-stage foot-mounted*
MDRXF..	Jednostopniowa wersja z kołnierzem B5 *Single-stage B5 flange-mounted*

Seria MDF - przekładnie płaskie
MDF series - parallel shaft helical gear units

MDF...	Wał wyjściowy z wpustem, montaż łapowy *Output shaft with key, foot-mounted*
MDFA..B	Wał drążony z rowkiem wpustowym, montaż łapowy *Hollow shaft with key, foot-mounted*
MDFH..B	Wał drążony z pierścieniem zaciskowym, montaż łapowy *Hollow shaft with shrink disk, foot-mounted*
MDFV..B	Wał drążony z wielowypustem, montaż łapowy *Splined hollow shaft, foot-mounted*
MDFF..	Wał pełny z wpustem, kołnierz B5 *Solid shaft, B5 flange-mounted*
MDFAF..	Wał drążony z rowkiem wpustowym, kołnierz B5 *Hollow shaft with key, B5 flange-mounted*
MDFHF..	Wał drążony z pierścieniem zaciskowym, kołnierz B5 *Hollow shaft with shrink disk, B5 flange-mounted*
MDFVF..	Wał drążony z wielowypustem, kołnierz B5 *Splined hollow shaft, B5 flange-mounted*
MDFA..	Wał drążony z rowkiem wpustowym *Hollow shaft with key*
MDFH..	Wał drążony z pierścieniem zaciskowym *Hollow shaft with shrink disk*

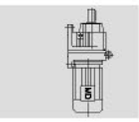

MDFV...	Wał drążony z wielowypustem *Splined hollow shaft*
MDFAZ..	Wał drążony z rowkiem wpustowym, kołnierz B14 *Hollow shaft with key, B14 flange-mounted*
MDFHZ..	Wał drążony z pierścieniem zaciskowym, kołnierz B14 *Hollow shaft with shrink disk, B14 flange-mounted*
MDFVZ..	Wał drążony z wielowypustem, kołnierz B14 *Splined hollow shaft, B14 flange-mounted*

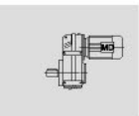

Seria MDK - przekładnie walcowo-stożkowe
MDK series - helical-bevel gear units

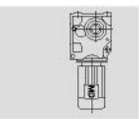

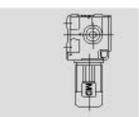

MDK...	Wał wyjściowy z wpustem, montaż łapowy *Output shaft with key, foot-mounted*
MDKA..B	Wał drążony z rowkiem wpustowym, montaż łapowy *Hollow shaft with key, foot-mounted*
MDKH..B	Wał drążony z pierścieniem zaciskowym, montaż łapowy *Hollow shaft with shrink disk, foot-mounted*
MDKV..B	Wał drążony z wielowypustem, montaż łapowy *Splined hollow shaft, foot-mounted*
MDKF..	Wał wyjściowy z wpustem, kołnierz B5 Output *shaft with key, B5 flange-mounted*
MDKAF..	Wał drążony z rowkiem wpustowym, kołnierz B5 *Hollow shaft with key, B5 flange-mounted*
MDKHF..	Wał drążony z pierścieniem zaciskowym, kołnierz B5 *Hollow shaft with shrink disk, B5 flange-mounted*
MDKVF..	Wał drążony z wielowypustem, kołnierz B5 *Splined hollow shaft, B5 flange-mounted*
MDKA..	Wał drążony z rowkiem wpustowym *Hollow shaft with key*
MDKH..	Wał drążony z pierścieniem zaciskowym *Hollow shaft with shrink disk*
MDKV..	Wał drążony z wielowypustem *Splined hollow shaft*
MDKAZ..	Wał drążony z rowkiem wpustowym, kołnierz B14 *Hollow shaft with key, B14 flange-mounted*
MDKHZ..	Wał drążony z pierścieniem zaciskowym, kołnierz B14 *Hollow shaft with shrink disk, B14 flange-mounted*
MDKVZ..	Wał drążony z wielowypustem, kołnierz B14 *Splined hollow shaft, B14 flange-mounted*

Seria MDS - przekładnie walcowo-ślimakowe
MDS series - helical-worm gear units

MDS...	Wał wyjściowy z wpustem, montaż łapowy *Output shaft with key, foot-mounted*
MDSF..	Wał wyjściowy z wpustem, kołnierz B5 Output *shaft with key, B5 flange-mounted*
MDSAF..	Wał drążony z rowkiem wpustowym, kołnierz B5 *Hollow shaft with key, B5 flange-mounted*
MDSHF..	Wał drążony z pierścieniem zaciskowym, kołnierz B5 *Hollow shaft with shrink disk, B5 flange-mounted*
MDSA..	Wał drążony z rowkiem wpustowym *Hollow shaft with key*
MDSH..	Wał drążony z pierścieniem zaciskowym *Hollow shaft with shrink disk*
MDSAZ..	Wał drążony z rowkiem wpustowym, kołnierz B14 *Hollow shaft with key, B14 flange-mounted*
MDSHZ..	Wał drążony z pierścieniem zaciskowym, kołnierz B14 *Hollow shaft with shrink disk, B14 flange-mounted*

3.4. Oznaczenia wersji silników elektrycznych i opcje

3.4. Design and options for AC motors

Opcje dla silników
Motor options

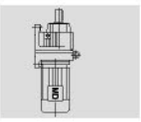

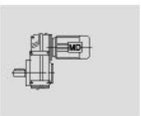

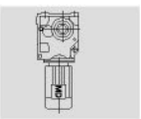

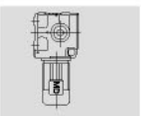

DS	Silnik zintegrowany trójfazowy asynchroniczny, klasa sprawności IE2 *Three phase integrated asynchronous motor IE2 class*
AM	Adapter przyłączeniowy do silnika IEC *Input adapter IEC*
BE	Hamulec *Brake*
../HF	Luzownik z opcją blokowania *Screw release (lock in the brake release position)*
../HR	Luzownik samoczynnie powracający *Handle release (automatic braking position)*
/RS	Backstop *Backstop*
/TF	Czujnik temperatury (termistor lub rezystor PTC) *Temperature sensor (PTC thermistor or PTC resistor)*
/TH	Termostat (czujnik bimetalowy) *Thermostat (bimetallic switch)*
/U	Brak wentylatora *Non-ventilated (without fan)*
/V	Obce chłodzenie *Forced cooling fan*
/Z	Ciężki wentylator *Additional inertia (flywheel fan)*
/C	Daszek ochronny *Protection canopy for fan guard*

Enkodery
Encoders

/AV1Y	Enkoder absolutny z wałem pełnym. Sygnał SSI + sin/cos. Napięcie zasilania $24V_{DC}$ *Absolute encoder with solid shaft. SSI and sin/cos signals and $24V_{DC}$ supply*
/ES..T	Enkoder inkrementalny z wałem drążonym. Sygnał TTL (RS-422). Napięcie zasilania $5V_{DC}$ *Encoder with hollow shaft. TTL (RS-422) signals and $5V_{DC}$ supply*
/ES..S	Enkoder inkrementalny z wałem drążonym. Sygnał sin/cos. Napięcie zasilania $24V_{DC}$ *Encoder with hollow shaft. Sin/cos signals and $24V_{DC}$ supply*
/ES..R	Enkoder inkrementalny z wałem drążonym. Sygnał TTL (RS-422). Napięcie zasilania $24V_{DC}$ *Encoder with hollow shaft. TTL (RS-422) signals and $24V_{DC}$ supply*
/ES..C	Enkoder inkrementalny z wałem drążonym. Sygnał HTL. Napięcie zasilania $24V_{DC}$ *Encoder with hollow shaft. HTL signals and $24V_{DC}$ supply*
/EV..T	Enkoder inkrementalny z wałem pełnym. Sygnał TTL (RS-422). Napięcie zasilania $5V_{DC}$ *Encoder with solid shaft. TTL (RS-422) signals and $5V_{DC}$ supply*
/EV..S	Enkoder inkrementalny z wałem pełnym. Sygnał sin/cos. Napięcie zasilania $24V_{DC}$ *Encoder with solid shaft. Sin/cos signals and $24V_{DC}$ supply*
/EV..R	Enkoder inkrementalny z wałem pełnym. Sygnał TTL (RS-422). Napięcie zasilania $24V_{DC}$ *Encoder with solid shaft. TTL (RS-422) signals and $24V_{DC}$ supply*
/EV..C	Enkoder inkrementalny z wałem pełnym. Sygnał HTL. Napięcie zasilania $24V_{DC}$ *Encoder with solid shaft. HTL signals and $24V_{DC}$ supply*

Opcje urządzeń montażowych enkodera do silników AC
Mounting device for encoders on AC motor option

ES..A	...z wałem drążonym *...with hollow shaft*
EV1A	...z wałem pełnym *...with solid shaft*

4. Procedura doboru
4. Project planning for drives
4.1. Oznaczenia parametrów doboru
4.1. Drive and gear unit selection data

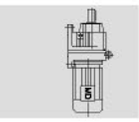
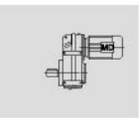
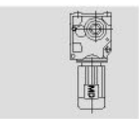
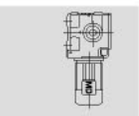

W celu jednoznacznego dobrania motoreduktora należy określić poniższe parametry.
Certain data of the application have to be provided to being able to precisely specify the components for your drive.

Oznaczenie *Designation*	Znaczenie *Meaning*	Jednostka *Unit*
n_{amin}	Minimalna wyjściowa prędkość obrotowa *Minimum output speed*	[rpm]
n_{amax}	Maksymalna wyjściowa prędkość obrotowa *Maximum output speed*	[rpm]
P_a at n_{amin}	Moc wyjściowa przy minimalnej prędkości wyjściowej *Output power at minimum output speed*	[kW]
P_a at n_{amax}	Moc wyjściowa przy maksymalnej prędkości wyjściowej *Output power at minimum output speed*	[kW]
M_a at n_{amin}	Moment wyjściowy przy min. prędkości wyjściowej *Output power at minimum output speed*	[Nm]
M_a at n_{amax}	Moment wyjściowy przy max. prędkości wyjściowej *Output power at minimum output speed*	[Nm]
F_R	Siła promieniowa na wale wyjściowym. Oznacza siłę umiejscowioną w środku długości czopa. W przypadku innej pozycji należy określić punkt jej umiejscowienia uwzględniając kierunek obrotów wału. *Overhung load on output shaft. Assumes force application is in the center of the shaft end. If not, please specify the exact application point indicating the application angle and direction of rotation of the shaft for a check calcucation.*	[N]
F_A	Siła osiowa (wciskająca i ciągnąca) na wale wyjściowym *Axial load (tension and compression) on the output shaft*	[N]
J_{load}	Moment bezwładności masy napędzanej *Mass moment of inertia to be driven*	[10^{-4}kg m^2]
MD R/F/K/S M1-M6	Wymagany typ przekładni oraz pozycja montażu *Required gear unit type and mounting position*	–
IP..	Wymagany stopień ochrony *Required degree of protection*	–
ϑ_{amb}	Temperatura otoczenia *Ambient temperature*	[C]
H	Wysokość ustawienia napędu *Installation altitude*	[m n.p.m.] *[m a.s.l]*
S.., ..% cdf	Rodzaj pracy, alternatywnie dokładny cykl pracy pod obciążeniem *Duty type and cyclic duration factor (cdf), alternatively, exact load cycle can be specified*	–
Z	Częstotliwość rozruchów, alternatywnie dokładny cykl pracy *Starting frequency, alternatively, exact load cycle can be specified*	[1/h]
f_{line}	Częstotliwość napięcia zasilania *Line frequency*	[Hz]
V_{mot} V_{brake}	Napięcie znamionowe zasilania *Operating voltage of motor and brake*	[V]
M_B	Wymagany moment hamowania *Required braking torque*	[Nm]

4.2. Kolejność procedury doboru
4.2. Project planning sequence

Następująca tabela pokazuje kolejność czynności w procedurze doboru.
The following flowchart displays a project planning procedure for a drive.

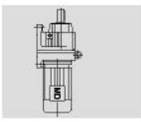
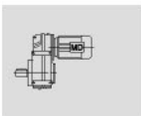
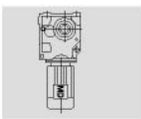
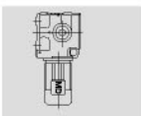

Konieczne informacje o napędzanej maszynie • Dane techniczne i warunki pracy • Dokładność zatrzymania • Prędkość wyjściowa • Starty, przyspieszanie i zwalnianie • Określenie cyklu pracy	***Necessary information on the machine to be driven*** • *Technical data and ambient conditions* • *Stopping accuracy* • *Output speed* • *Start-up acceleration and deceleration* • *Calculation of the cycling duration*
Obliczenie istotnych danych aplikacji • Statyczna, dynamiczna i prądnicowa moc • Prędkości obrotowe • Momenty obrotowe • Czas pracy	***Calculation of the relevant application data*** • *Static, dynamic and regenerative power* • *Speeds* • *Torque* • *Cycling duration*
Dobór przekładni • Ustalenie wielkości, przełożenia i wersji przekładni • Sprawdzenie dokładności pozycjonowania • Sprawdzenie obciążenia przekładni ($M_{amax} \geq M_{a(t)}$)	***Gear unit selection*** • *Definition of gear unit size, ratio and type* • *Check for positioning accuracy* • *Check for gear unit load ability ($M_{amax} \geq M_{a(t)}$)*
Dobór systemu kontroli zależnie od: • Dokładności pozycjonowania • Zakresu prędkości • Sposobu kontroli	***Control system selection depending on*** • *Positioning accuracy* • *Speed range* • *Control mode*
Praca z falownikiem • Falownik sterowany napięciem z/bez regulacji prędkości • Falownik wektorowy sterowany napięciem z/bez regulacji prędkości • Falownik wektorowy sterowany prądem	***Inverter operation mode*** • *Voltage-controlled inverter with/without speed control* • *Voltage-controlled, flux vector-controlled inverter with/without speed control (VFC)* • *Current-controlled, flux vector-controlled inverter (CFC)*
Dobór silnika • Maksymalny moment obrotowy • W napędach dynamicznych: rzeczywisty moment obrotowy przy średniej prędkości obrotowej • Maksymalna prędkość obrotowa • W napędach dynamicznych: krzywe momentu obrotowego • Obciążenie termiczne (zakres nastaw, czas pracy) • Dobór właściwego enkodera • Wyposażenie silnika (hamulec, złącze wtykowe, kontrola TF itd.)	***Motor selection*** • *Maximum torque* • *In dynamic drives: effective torque at medium speed* • *Maximum speed* • *In dynamic drives: torque curves* • *Thermal loading (setting range, cycling duration factor)* • *Selection of the correct encoder* • *Motor equipment (brake, plug connection, TF temperature sensor monitoring, etc.)*
Dobór falownika • Przyporządkowanie silnik-falownik • Moc nominalna i szczytowa w przypadku falowników sterowanych napięciem • Prąd nominalny i szczytowy w przypadku falowników sterowanych prądem	***Inverter selection*** • *Motor/inverter assignment* • *Continuous power and peak power in voltage-controlled inverters* • *Continuous current and peak current in current-controlled inverters*
Dobór opornika hamulcowego • Na podstawie obliczonej mocy zwrotnej oraz czasu pracy	***Selecting the braking resistor*** • *Based on the calculated regenerative power and cdf*
Opcje • Układy przeciwzakłóceniowe • Obsługa/komunikacja • Dodatkowe funkcje	***Options*** • *EMC measures* • *Operation/communication board* • *Additional functions*
Sprawdzić, czy wszystkie wymogi zostały spełnione	***Check to see if all requirements have been met***

4.3. Sprawność przekładni
4.3. Efficiency of gear units

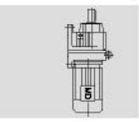

Podstawowe informacje
General information

Sprawność przekładni uwarunkowana jest przede wszystkim tarciem międzyzębnym i w łożyskach. Sprawność statyczna podczas rozruchu jest zawsze niższa, niż podczas pracy. Dotyczy to przede wszystkim przekładni walcowo-ślimakowych.

The efficiency of gear units is mainly determined by the gearing, mash and bearing friction. Please note that the starting efficiency of a gear unit is always less than its efficiency at operating speed. This fact is especially obvious in helical-worm right-angle geared motors.

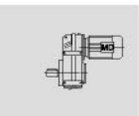

Seria MDR/F/K
MDR/F/K gear units

Sprawność przekładni walcowych, płaskich i walcowo-stożkowych związana jest z ilością stopni przełożenia i wynosi od 94% (3 stopnie) do 98% (1 stopień).

The gearing efficiency of helical, parallel-shaft and helical-bevel gear units , according to the number of gear is in the range from 94% (3-step) till 98% (1-step).

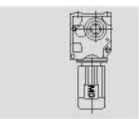

Seria MDS
MDS gear units

Przełożenie walcowo-ślimakowe charakteryzuje się większą powierzchnią tarcia. W związku z tym te przekładnie mogą mieć większe straty, niż serie MDR/F/K. Inne parametry wpływające na sprawność:
• przełożenie
• prędkość wejściowa
• temperatura przekładni
Przekładnie walcowo-ślimakowe MDS posiadają większą sprawność, niż przekładnie tylko ślimakowe. Mogą osiągać η<0.5 przy dużych przełożeniach.

The gearing in helical-worm gear units produces a high proportion of sliding friction. As a result, these gear units may have higher gearing losses than MDR/F/K gear units and thus be less efficient. Other factors influencing efficiency:
• gear ratio of the helical-worm gear unit
• input speed
• gear unit temperature
Helical-worm MDS series are helical gear/worm combinations that are significantly more efficient than standard worm gear units.
The efficiency may reach η < 0.5 if the helical-worm gear stage has a very high gear ratio.

Faza docierania
Runing-in phase

Powierzchnie zębów nowej przekładni walcowo-ślimakowej nie są kompletnie gładkie. Tarcie jest większe, sprawność jest mniejsza. Ten efekt jest bardziej widoczny wraz ze wzrostem przełożenia. Podczas fazy docierania, nominalna sprawność przekładni jest obniżona o podane niżej wartości:

The tooth flanks of new helical-worm gear units are not yet completely smooth. That fact makes for a greater friction angle and less efficiency than during later operation. This effect intensfies with increasing gear ratio.During the running-in phase, the nominal efficiency of the gear is reduced by the relevant value from the following table:

	Przekładnia walcowo-ślimakowa *(helical-worm gearbox)*	
	Strata sprawności *(η-reduction)*	Zakres przełożeń *(i-range)*
1 start	ok. 12% *(approx.12%)*	ok. 50-280 *(approx. 50-280)*
2 start	ok. 6% *(approx.6%)*	ok. 20-75 *(approx. 20-75)*
3 start	ok. 3% *(approx.3%)*	ok. 20-90 *(approx. 20-90)*
-	-	-
5 start	ok. 3% *(approx.3%)*	ok. 6-25 *(approx. 6-25)*
6 start	ok. 2% *(approx.2%)*	ok. 7-25 *(approx. 7-25)*

Faza docierania przeciętnie trwa 24-48 godzin. Przekładnie walcowo-ślimakowe (seria MDS) osiągają nominalną sprawność, gdy zostaną spełnione następujące warunki:
• Praca ustalona
• Ustalona temperatura pracy
• Zastosowany rekomendowany olej
• Praca w zakresie nominalnego obciążenia

The running-in phase normally lasts 24-48 hours. Helical-worm gear units (MDS series) achieve their normal efficiency values when the following conditions have been met:
• The gear unit has been run in completely
• The gear unit has reached nominal operating temperature
• The recommended lubricant has been filled in
• The gear unit is working in the nominal load range

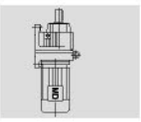

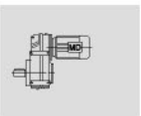

Straty związane z zanurzeniem w środku smarnym
Churning losses

W głównych pozycjach montażu, pierwszy stopień przełożenia jest zanurzony w oleju. W przekładniach większych rozmiarów i przy większych prędkościach obrotowych stopnia wejściowego, ma to znaczny wpływ na straty. W takich przypadkach prosimy o kontakt z biurem technicznym MegaDrive. Jeśli to możliwe, należy stosować przekładnie serii MDR/K/S w pozycji pracy M1.

In certain gear units mounting positions , the first reduction stage is completely immersed in the lubricant. For larger gear unit sizes and high circumferential velocities of the input stage, this gives rise to churning losses constituting a factor, which cannot be ignored. Please contact MegaDrive if you wish to use gear units of this type.
If possible, use the mounting position M1 for MDR/K/S gear units in order to keep the churning losses in low.

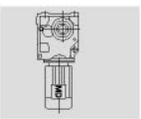

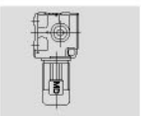

4.4. Współczynnik bezpieczeństwa (I)
4.4. Service factor (I)

Wyznaczanie współczynika bezpieczeństwa
Determining the service factor

Współczynnik bezpieczeństwa f_B uwzględnia z wystarczającą dokładnością oddziaływanie maszyny roboczej na przekładnię. Obliczanie współczynnika bezpieczeństwa zależne jest od codziennego czasu pracy oraz częstości włączeń. W zależności od współczynnika przyspieszenia masy uwzględniono trzy tryby pracy. Właściwy współczynnik bezpieczeństwa dla danego zastosowania przedstawiono poniżej. Na podstawie niniejszego diagramu, współczynnik bezpieczeństwa musi być mniejszy lub równy współczynnikowi bezpieczeństwa znajdującemu się w tabelach doboru.

The effect of the driven machine on the gear unit is taken into account to a sufficient level of accuracy using the service factor f_B. The service factor is determined by the daily operating time and the starting frequency. Three load classifications are also considered depending on the mass acceleration factor. You can determine the service factor applicable to your application in the following figure. The service factor determined using this diagram must be smaller than or equal to the service factor as given in the selection tables.

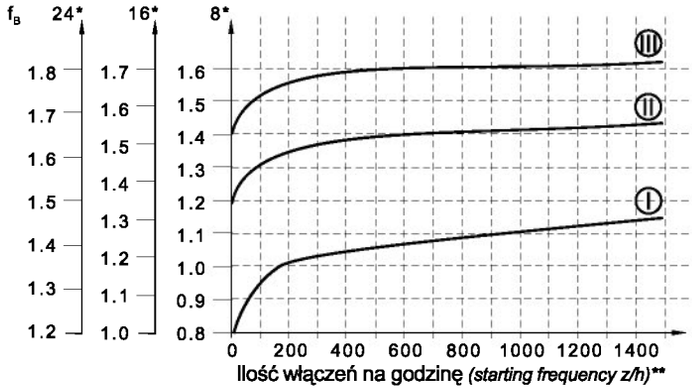

*Codzienny czas pracy w godzinach
** Daily operating time in hours*
**Do włączeń zalicza się wszystkie rozruchy i hamowania, a także przełączenia z niskich na wysokie prędkości obrotowe i na odwrót
**The cycles include all starting and braking procedures as well as changes from low to high speed and vice versa

Tryb pracy
Load classification

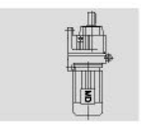

Rozróżnia się trzy, następujące tryby pracy:

Ⓘ Równomierny, dopuszczalny współczynnik przyspieszenia masy ≤ 0,2
Ⓘⓘ Nierównomierny, dopuszczalny współczynnik przyspieszenia masy ≤ 3
Ⓘⓘⓘ Silnie nierównomierny, dopuszczalny współczynnik przyspieszenia masy ≤ 10

Three load classifications are differentiated:

Ⓘ Uniform, approved mass acceleration factor ≤ 0,2
Ⓘⓘ Non-uniform, approved mass acceleration factor ≤ 3
Ⓘⓘⓘ Non-uniform, approved mass acceleration factor ≤ 10

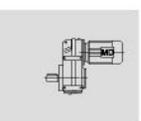

Współczynnik przyspieszenia masy
Mass acceleration factor

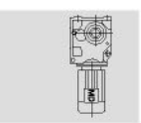

Współczynnik przyspieszenia masy oblicza się w następujący sposób:

$$\textbf{Współ. przyspiesz. masy} = \frac{\textbf{Wszystkie zewnętrzne momenty bezwładności masy}}{\textbf{Moment bezwładności masy po stronie silnika}}$$

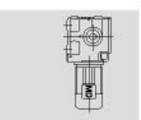

"Wszystkie zewnętrzne momenty bezwładności masy" odnoszą się do momentów bezwładności masy maszyny i przekładni, zredukowanych do prędkości obrotowej silnika. Redukcję do prędkości obrotowej silnika oblicza się za pomocą nastepującego wzoru:

$$J_X = J \cdot \left(\frac{n}{n_M}\right)^2$$

Gdzie:
J_X - moment bezwładności masy zredukowany do wału silnika
J - moment bezwładności masy w odniesieniu do prędkości obrotowej na wyjściu przekładni
n - prędkość obrotowa na wyjściu przekładni
n_M - prędkość obrotowa silnika

"Moment bezwładności masy po stronie silnika" odnosi się do momentu bezwładności masy silnika, hamulca (jeżeli silnik jest w niego wyposażony) oraz ciężkiego wentylatora (wentylator Z).
W przypadku dużych współczynników przyspieszenia masy (>10), dużego luzu w elementach przełożenia lub dużych sił poprzecznych, mogą wystapić współczynniki eksploatacyjne f_B > 1,8. Jeśli wystąpi taki przypadek, prosimy o kontakt z naszym biurem technicznym.

The mass acceleration factor is calculated as follows:

$$\textbf{Mass acceleration factor} = \frac{\textbf{All external mass moments of inertia}}{\textbf{Mass moments of inertia at the motor end}}$$

"All external mass moments of inertia" are the mass moments of inertia of the driven machine and the gear unit, scaled down to the motor speed. The calculation for scaling down to the motor speed is performed using the following formula:

$$J_X = J \cdot \left(\frac{n}{n_M}\right)^2$$

Where:
J_X - reduced mass moment of inertia on the motor shaft
J - mass moment of inertia with reference to the output speed of the gear unit
n - output speed of the gear unit
n_M - motor speed

"Mass moment of inertia at the motor end" is the mass oment of inertia of the motor and, if installed, the brake and the flywheel fan (Z fan).
Service factors f_B > 1,8 may occur with large mass acceleration factors (>10), high levels of backlash in the transmission elements or large overhung loads. Please contact our technical department in this case.

Współczynnik bezpieczeństwa f_B
Service factor f_B

Ustalenie maksymalnego, dopuszczonego momentu obrotowego M_{amax} oraz jego pochodnej $f_B=M_{amax}/M_a$ (współczynnik bezpieczeństwa) nie jest ustandaryzowane i w znacznej mierze zależy od producenta. Przekładnie serii MDR/F/K/S już przy współczynniku f_B=1 oferują wysoki stopień bezpieczeństwa i niezawodności, jeżeli chodzi o wytrzymałość zmęczeniową (za wyjątkiem zużycia ślimacznicy w przekładniach serii MDS). Współczynnik bezpieczeństwa nie może być porównywany do danych innych producentów przekładni. W przypadku jakichkolwiek wątpliwości, zachęcamy do kontaktu z naszym biurem technicznym, w celu otrzymania bardziej szczegółowych informacji na temat danego rozwiązania.

The method for determining the maximum approved continuous torque M_{amax} and then deriving the service factor $f_B=M_{amax}/M_a$ is not defined in a standard and varies greatly from manufacturer to manufacturer. With the service factor f_B=1, drives afford an extremely high level of safety and reliability in the fatiguestrength range (exception: wearing of the worm wheel in helical-worm gear units). Under a certain circumstances, the service factor may not be comparable to the information given details for your specific drive. Please contact our technical department to get the special drive equipments' document in detail.

Przykład
Example

Przy współczynniku przyspieszenia masy 2,5 (tryb pracy II), 14-tu godzinach codziennego czasu pracy (należy odczytać wartość przy 16h/d) i 300-tu włączeniach na godzinę, otrzymamy, zgodnie z wykresem na s. 19, współczynnik bezpieczeństwa f_B=1,51. Zgodnie z tabelami doboru, wybrany motoreduktor musi cechować się wartością f_B równą lub większą 1,51.

Mass acceleration factor is 2,5 (load classification II), 14 hours/day operating time (check the figure at 16h/d) and 300 cycles/hourproduce a service factor f_B=1,51. as shown in the figure on the page 19. According to the selection table, the selected gearmotor must have a f_B value 1,51 or greater.

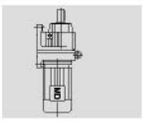

Przekładnie walcowo-ślimakowe
Helical-worm gear units

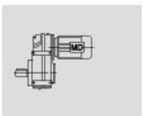

W przypadku przekładni walcowo-ślimakowych (seria MDS), konieczne jest, oprócz współczynnika bezpieczeństwa f_B, uwzględnienie dwóch pozostałych współczynników:

- f_{B1} - współczynnik bezpieczeństwa wynikający z temperatury otoczenia
- f_{B2} - współczynnik bezpieczeństwa wynikający z czasu pracy

Współczynniki te można obliczyć za pomocą poniższych diagramów. W przypadku f_{B1} uwzględniany jest dany tryb pracy tak samo, jak w przypadku f_B. W przypadku pracy poniżej -20°C (f_{B1}), należy skontaktować się z MegaDrive Sp. z o.o.

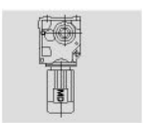

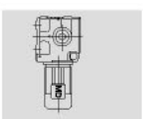

Two further service factors have to be taken into account in addition to the service factor f_B shown on the diagram below. They are:

- *f_{B1} - service factor from the ambient temperature*
- *f_{B2} - service factor from the cyclic duration factor*

Additional service factyors f_{B1} and f_{B2} can be determined by referring to the diagrams below. For the f_{B1}, it is possible to define load classification in the same way as for f_B. Please contact MegaDrive Sp. z o.o. in case of temperatures below -20°C (f_{B1}).

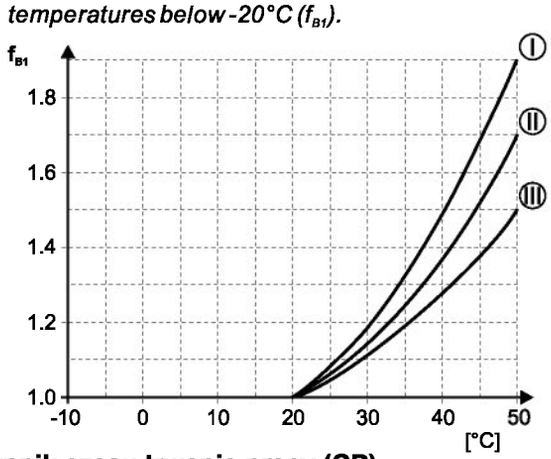

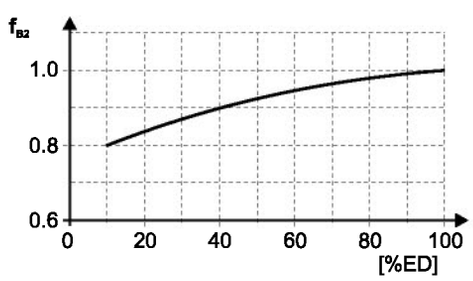

Współczynnik czasu trwania pracy (CP)
Cycling duration factor (CDF)

$$\text{CP } (CDF)\ [\%] = \frac{\text{Czas obciążenia w min/h } (\textit{time under load in min/h})}{60} \times 100$$

f_B całkowite
Total service factor

Całkowity współczynnik bezpieczeństwa dla przekładni walcowo-ślimakowych można obliczyć za pomocą następującego wzoru:

A total service factor for helical-worm gear units is calculated as follows:

$$f_{B(tot)} = f_B \times f_{B1} \times f_{B2}$$

Przykład
Example

Motoreduktor z poprzedniego przykładu jest motoreduktorem ślimakowym o f_B = **1,51**.Temperatura otoczenia wynosi 40°C (f_{B1}=**1,38**; przy trybie pracy II). Czas obciążenia = 40 min/h (CP=66,67%; f_{B2}=**0,95**). Całkowity współczynnik bezpieczeństwa wynosi $f_{B(tot)}$ = **1,51 x 1,38 x 0,95 = 1,98**

Zgodnie z tabelami doboru, współczynnik bezpieczeństwa wybranego motoreduktora musi wynosić **≥1,98.**

*Gearmotor from the previous example is a helical-worm unit with a service factor f_B = **1,51**. Ambient temperature is 40°C (f_{B1}=**1,38**; load classification II), time under load = 40 min/h (CDF=66,67%; f_{B2}=**0,95**). The total service factor is equal to: $f_{B(tot)}$ = **1,51 x 1,38 x 0,95 = 1,98***

*According to the selection tables, the selected helical-worm gearmotor's service factor must be **≥1,98.***

4.5. Współczynnik bezpieczeństwa (II)

4.5. Service factor (II)

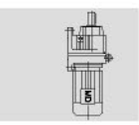

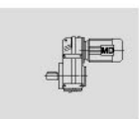

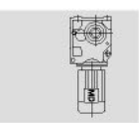

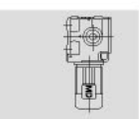

Doboru przekładni dokonuje się poprzez porównanie rzeczywistych obciążeń z katalogowymi danymi znamionowymi, które bazują na standardowym zestawie warunków obciążenia, natomiast rzeczywiste warunki obciążenia różnią się zależnie od rodzaju aplikacji. Współczynniki przeciążalności używane są zatem do obliczania obciążenia zastępczego w celu porównania z katalogowymi danymi znamionowymi.

Mechaniczne dane znamionowe określają trwałość i/lub wytrzymałość przy założeniu, że jednostka pracuje w sposób ciągły przez 10 godz./dzień w warunkach równomiernego obciążenia.

Katalogowe dane znamionowe dopuszczają 100% przeciążalności przy rozruchu, hamowaniu lub przeciążenie chwilowe podczas pracy przez okres do 10 godzin dziennie.

Wybrana jednostka posiada zatem katalogowe dane znamionowe równe przynajmniej połowie maksymalnego dopuszczalnego przeciążenia.

Mechaniczny współczynnik przeciążalności f_{B2} (Tabela 2.) jest używany do modyfikowania rzeczywistego obciążenia w zależności od dziennego czasu pracy i rodzaju obciążenia.

Charakterystyki obciążenia dla szerokiego zakresu zastosowań są wyszczególnione w Tabeli 1. Są używane do określania odpowiedniego współczynnika przeciążalności f_{B2} z Tabeli 2.

Jeśli możliwe jest obliczenie lub dokładne oszacowanie przeciążeń, zamiast współczynnika f_{B2} należy stosować rzeczywiste wartości obciążeń.

W przypadku jednostek poddawanych częstym przeciążeniom podczas zatrzymywania/rozruchu z częstotliwością przekraczającą 10 razy/dzień, należy pomnożyć współczynnik f_{B2} przez współczynnik f_{B3} z Tabeli 3.

W przypadku zastosowań, w których jednostki pracują w wyjątkowo zapylonych lub wilgotnych środowiskach, doboru jednostki należy dokonać po konsultacjach z MegaDrive.

Gear unit selection is made by comparing actual loads with catalogue ratings. Catalogue ratings are based on a standard set of loading conditions, whereas actual load conditions vary according to type of application. Service factors are therefore used to calculate an equivalent load to compare with catalogue ratings.

Mechanical ratings measure capacity in terms of life and/or strength, assuming 10 hrs/day continuous running under uniform load conditions.

Catalogue ratings allow 100% overload at starting, braking or momentarily during operation up to 10 hours per day.

The unit selected must therefore have a catalogue rating at least equal to half maximum overload.

Mechanical service factor f_{B2} (Table 2) is used to modify the actual load according to daily operating time, and type of loading.

Load characteristics for a wide range of applications are detailed in Table 1, which are used in deciding the appropriateMechanical service factor f_{B2} (Table 2).

If overloads can be calculated, or accurately assessed, actual loads should be used instead of f_{B2}.

For units subjected to frequent stop/starts overloads in excess of 10 times/day multiply factor f_{B2} x Factor f_{B3} (Table 3).

For applications where units are to operate in extremely dusty or moist/humid atmospheres unit selection should be referred to MegaDrive.

Tabela 1. Współczynnik f_{B1} dla napędzanej maszyny
Table 1. Factor f_{B1} for driven machine

Przemysł *Industry*	Napędzana maszyna *Driven machine*	Dzienny czas eksploat. (*Day work duration*)		
		≤ 0.5h	0.5h ~ 10h	≥ 10h
Oczyszczalnie ścieków *Waste water treatment*	Zagęszczacze - napęd centralny *(Thickeners - central drive)*	-	-	1.2
	Prasy filtracyjne *(Fitter presses)*	1.0	1.3	1.5
	Flokulatory *(Flocculation apparatus)*	0.8	1.0	1.3
	Napowietrzacze *(Aerators)*	-	1.8	2.0
	Zgarniacze *(Raking equipment)*	1.0	1.2	1.3
	Kombinowane wzdłużne i obrot. grabie *(Combined longitudinal and rotary rakes)*	1.0	1.3	1.5
	Zagęszczacze wstępne *(Pre-thickeners)*	-	1.1	1.3
	Pompy śrubowe *(Screw pumps)*	-	1.3	1.5
	Turbiny wodne *(Water turbines)*	-	-	2.0
	Pompy odśrodkowe *(Centrifugal pumps)*	1.0	1.2	1.3
	Pompy jednotłokowe *(1 piston positive-displacement pumps)*	1.3	1.4	1.8
	Pompy wielotłokowe *(>1 piston positive-displacement pumps)*	1.2	1.4	1.5
Pogłębiarki *Dredges*	Przenośniki kubełkowe *(Bucket conveyors)*	-	1.6	1.6
	Urządzenia baryłkowe *(Dumpling devices)*	-	1.3	1.5
	Napędy jazdy gąsiennic *(Caterpillar traveling gears)*	1.2	1.6	1.8
	Koła czerpakowe *(Bucket wheel excavators as pick-up)*	-	1.7	1.7
	Koła czerp. mater. nietypowych *(Bucket wheel excavators for primitive materials)*	-	2.2	2.2
	Głowice tnące *(Cutter heads)*	-	2.2	2.2
	Przekładnie trawersów *(Traversing gears)*	-	1.4	1.8
Dźwigi *Cranes*	Napędy obrotu *(Slewing gears)*	2.5	2.5	3.0
	Przekładnie żurawii *(Luffing gears)*	2.5	2.5	3.0
	Napędy jazdy *(Travelling gears)*	2.5	3.0	3.0
	Wciągniki *(Hoisting gears)*	2.5	2.5	3.0
	Obrót żurawii *(Derricking jib cranes)*	2.5	2.5	3.0

Przemysł *Industry*	Napędzana maszyna *Driven machine*	Dzienny czas eksploat. (*Day work duration*)		
		≤ 0.5h	0.5h ~ 10h	≥ 10h
Przemysł chemiczny ***Chemical industry***	Ekstrudery *(Extruders)*	-	-	1.6
	Mieszalniki mas*(Dough mills)*	-	1.8	1.8
	Kalandry gumy *(Rubber calenders)*	-	1.5	1.5
	Bębny chłodzące *(Coolind drums)*	-	1.3	1.4
	Mieszalniki mediów jednorodnych *(Mixers for uniform media)*	1.0	1.3	1.4
	Mieszalniki mediów niejednorodnych *(Mixers for non-uniform media)*	1.4	1.6	1.7
	Mieszaln. mediów o stałej gęstości *(Agitators for media with uniform density)*	1.0	1.3	1.5
	Mieszaln. mediów o zmiennej gęst. *(Agitators for media with non-uniform density)*	1.2	1.4	1.6
	Miesz. mediów z absorp. gazów *(Agitators for media with uniform gas absorption)*	1.4	1.6	1.8
	Opiekacze *(Toasters)*	1.0	1.3	1.5
	Wirówki *(Centrifuges)*	1.0	1.2	1.3
Przemysł stalowy ***Metal mills***	Wypychacze wlewek *(Ingot pushers)*	1.0	1.2	1.2
	Zwijarki drutu *(Winding machines)*	-	1.6	1.6
	Transport łoży chłodzących *(Cooling bed transfer frames)*	-	1.5	1.5
	Prostownice *(Roller straighteners)*	-	1.6	1.6
	Stoły rolkowe pracy ciągłej *(Roller tables continuous)*	-	1.5	1.5
	Stoły rolkowe pracy przerywanej *(Roller tables intermittent)*	-	2.0	2.0
	Stoły rolkowe nawrotne *(Roller tables reversing tube mills)*	-	1.8	1.8
	Nożyce pracy ciągłej *(Shears continuous)*	-	1.5	1.5
	Nożyce korbowe *(Shears crank type)*	1.0	1.0	1.0
	Kierownice odlewów ciągłych *(Continuous casting drivers)*	-	1.4	1.4
	Nawrotne młyny *(Reversing blooming mills)*		2.5	2.5
Przenośniki ***Conveyors***	Przenośniki kubełkowe *(Bucket conveyors)*		1.2	1.5
	Wciągarki napinające *(Hauling winches)*	1.4	1.6	1.6
	Wciągarki podnoszące *(Hoists)*		1.5	1.8
	Przenośniki taśmowe <150kW *(Belt conveyors <150kW)*	1.0	1.2	1.3
	Przenośniki taśmowe ≥150kW *(Belt conveyors ≥150kW)*	1.1	1.3	1.5
	Windy towarowe *(Goods lifts)*	-	1.2	1.5
	Windy osobowe *(Passenger lifts)*	-	1.5	1.8
	Podajniki płytowe *(Apron conveyors)*	-	1.2	1.5
	Wznoszące *(Escalators)*		1.2	1.4
	Napędy jazdy szynowe *(Rail travelling gears)*	-	1.5	-
Wieże chłodn. ***Cooling towers***	Wentylatory wyciągowe *(Cooling tower fans)*	-	-	2.0
	Wentylatory tłoczące *(Blowers - axial and radial)*	-	1.4	1.5
Cukrownictwo ***Cane and beet sugar produc--tion***	Noże do cięcia trzciny cukrowej *(Cane knives)*	-	-	1.7
	Młyny *(Cane mills)*	-	-	1.7
	Siekanie buraka *(Beet cossettes macerators)*	-	-	1.2
	Wyciskanie *(Extraction plants, mechanical refrigerators, juice boilers)*	-	-	1.4
	Myjki buraka *(Sugar beet washing machines)*	-	-	1.5
	Siekanie buraka *(Sugar beet cutters)*	-	-	1.5
Papiernie ***Paper machines***	Inne aplikacje *(Of all-kind*)*	-	1.8	2.0
	Mieszanie pulpy *(Pulper drives)*	2.0	2.0	2.0
Nawijarki ***Cableways***	Nawijanie materiałów *(Material ropeways)*	-	1.3	1.4
	Nawijanie lin *(To/From system aerial ropeways)*	-	1.6	1.8
	Wyciągi *(T-barlifts)*	-	1.3	1.4
	Przewijanie ciągłe *(Continuous ropeways)*	-	1.4	1.6
Przemysł cementowy ***Cement industry***	Mieszalniki betonu *(Concrete mixers)*	-	1.5	1.5
	Łamacze *(Breakers)*	-	1.2	1.4
	Piece obrotowe *(Rotary kilns)*	-	-	2.0
	Młyny obrotowe *(Tube mills)*	-	-	2.0
	Separatory *(Separators)*	-	1.6	1.6
	Kruszarki walcowe *(Roll crushers)*	-	-	2.0
Kompresory ***Compressors***	Sprężarki tłokowe *(Reciprocating compressors)*	-	1.8	1.9
	Sprężarki odśrodkowe *(Centrifugal compressors)*	-	1.4	1.5

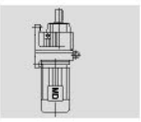

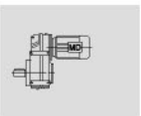

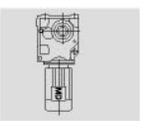

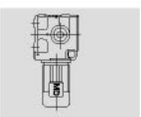

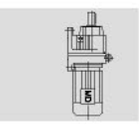

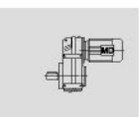

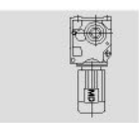

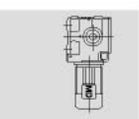

Tabela 2. Mechaniczny współczynnik przeciążalności (f_{B2})
Table 2. Mechanical service factor (f_{B2})

Źródło napędu *Prime mover*	Czas eksploat. (h/dzień) *Durat. of service (hrs per day)*	Klasyfikacja obciążeń-napędzana maszyna *(Load classification-driven machine)*		
		Współcz. jednorodnego przysp, masy ≤ 0.2 *Uniform mass acceler. factor ≤ 0.2*	Współcz. umiarkowanego przysp, masy ≤ 3 *Moderate mass acceler. factor ≤ 3*	Współcz. dużego przysp, masy ≤ 10 *Heavy mass acceler. factor ≤ 10*
Silnik elektr./silnik hydraul./turbina parowa *Electric or hydraulic motor, steam turbine*	< 3	0.80	1.00	1.50
	3~10	1.00	1.25	1.75
	> 10	1.25	1.50	2.00
Wielocylindrowy silnik spalinowy *Multi-cylinder internal combustion engine*	< 3	1.00	1.25	1.75
	3~10	1.25	1.50	2.00
	> 10	1.50	1.75	2.25
Jednocylindrowy silnik spalinowy *Single cylinder internal combustion engine*	< 3	1.25	1.50	2.00
	3~10	1.50	1.75	2.25
	> 10	1.75	2.00	2.50

$$\textbf{Współczynnik przyspieszenia masy} = \frac{\textbf{wszystkie zewnętrzne momenty bezwładności}^{1)}}{\textbf{moment bezwładności silnika napędowego}}$$

$$\textbf{\textit{Mass acceleration factor}} = \frac{\textbf{\textit{all external moments of inertia}}^{1)}}{\textbf{\textit{moment of inertia of driving motor}}}$$

[1)] obliczane w odniesieniu do wału silnika
[1)] *calculated with reference to the motor speed*

Tabela 3. Współczynnik związany z liczbą uruchomień (f_{B3})
Table 3. Number of starts factor (f_{B3})

Liczba uruchomień/zatrzymań na godzinę [2)] *Start/stops per hour [2)]*	Współczynnik f_{B3} *Factor f_{B3}*
< 10	1.00
10 ~ 100	1.15
100 ~ 500	1.25

[2)] wartości pośrednie uzyskuje się poprzez interpolację liniową
[2)] *intermediate values are obtained by linear interpolation*

4.6. Siły poprzeczne i osiowe
4.6. Overhung and axial loads

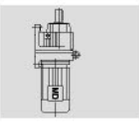
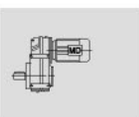
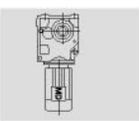
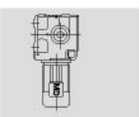

Obliczanie siły poprzecznej
Determining overhung load

Podczas obliczania powstającej siły poprzecznej należy wziąć pod uwagę, jaki element przenoszący będzie zamontowany do czopu końcowego wału. Dla różnych elementów przenoszących należy uwzględnić następujące współczynniki dodatkowe F_z

When determining the overhung load, the type of transmission element mounted on the shaft end must be considered. The transmission element factors F_z are listed as follows.

Element przenoszący *Transmission element*	Wsp. dodatkowy f_z *Transm. element factor f_z*	Uwagi *Comments*
Koła zębate *(gears)*	1.15	< 17 zębów *(< 17 teeth)*
Koła łańcuchowe gładkie *(chain sprockets)*	1.40	< 13 zębów *(< 13 teeth)*
Koła łańcuchowe gładkie *(chain sprockets)*	1.25	< 20 zębów *(< 20 teeth)*
Koła pasowe rowkowe wąskie *(narrow V-belt pulleys)*	1.75	wpływ naprężenia wstępnego *(pre-tensioning influence)*
Tarcze pasów płaskich *(flat belt pulleys)*	2.50	wpływ naprężenia wstępnego *(pre-tensioning influence)*
Tarcze pasów zębatych *(toothed belt pulleys)*	1.50	wpływ naprężenia wstępnego *(pre-tensioning influence)*

Następnym krokiem jest obliczenie obciążenia siłą poprzeczną wału silnika lub przekładni używając wzoru:
The overhung force load exerted on the motor or gear unit shaft is then calculated as follows:

$$F_R = \frac{M_d \times 2000}{d_0} \times f_z$$

Gdzie *(Where)*:
F_R - obciążenie siła poprzeczną (w N) *(overhung load in N)*
M_d - moment obrotowy (w Nm) *(torque in Nm)*
d_0 - średnica podziałowa zamontowanego elementu (w mm) *(PCD of the mounted transmission element in mm)*
f_z - współczynnik dodatkowy *(transmission element factor)*

Dopuszczalne siły poprzeczne
Permitted overhung load

Dopuszczalne siły poprzeczne są ustalane na podstawie nominalnej żywotności L_{10h} łożysk tocznych.
W przypadku szczególnych warunków eksploatacyjnych, na życzenie możliwe jest ustalenie dopuszczalnych sił poprzecznych na podstawie zmodyfikowanej żywotności L_{na}.
Dopuszczalne siły poprzeczne F_{Ra} dla wałów wyjściowych przekładni z łapami i wałem pełnym są podane w tabelach doboru. W przypadku innych wersji, prosimy o kontakt.

The basis for determining the permitted overhung load is a computation of the rated bearing service life L_{10h} of the anti-friction bearings.
For the special operating conditions, the permitted overhung loads can be determined by the modified service life L_{na} on request.
The permitted overhung loads F_{Ra} for the output shafts of foot-mounted gear units with a solid shaft are listed in the selection tables for geared motors. Please contact our company in case of other types.

Dane obowiązują przy przyłożeniu siły w środku czopa końcowego wału (w przekładniach kątowych należy patrzeć na napęd od strony A). W odniesieniu do kąta przyłożenia siły α i kierunku obrotu zostały przyjęte najbardziej niekorzystne warunki.

The data refer to the radial force applied to the center of the shaft end (in right-angle gear units as viewed onto the A-side output). The values for the force aplication angle α and direction of rotation are based on the worst case conditions.

Przekładnie serii MDK i MDS
MDK and MDS series gear units

Dopuszczalne jest jedynie 50% siły poprzecznej F_{Ra} zgodnie z tabelami doboru dla pozycji pracy M1 i montażu ściennego od strony czołowej dla przekładni serii MDK i MDS.

Only 50% of the F_{Ra} value specified in the selection tables is permitted in mounting position M1 with wall attachment on the front face for MDK and MDS gear units.

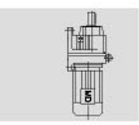

Informacje
Information

Motoreduktory walcowo-stożkowe MDR167~MDR187 w pozycjach pracy M1 do M4: dopuszczalne jest maksymalnie 50% podanej w tabelach doboru siły poprzecznej F_{Ra} w przypadku montażu przekładni w jakikolwiek sposób odbiegający od tego podanego w tabelach montażu w niniejszym katalogu.

Motoreduktory zębate czołowe w wersji z łapami i z kołnierzem (MDR..F): dopuszczalne jest maksymalnie 50% podanej w tabelach doboru siły poprzecznej F_{Ra} w przypadku montażu przekładni w jakikolwiek sposób odbiegający od tego podanego w tabelach montażu w niniejszym katalogu.

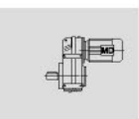

Helical-bevel geared motors MDR167~MDK187 in mounting positions M1 to M4: a maximum of 50% of the overhung load F_{Ra} specified in the selection tables is permitted in the case of gear unit mountings other than those shown in the mounting position sheets.

Foot and flange-mounted helical geared motors (MDR..F): a maximum of 50% of the overhung load F_{Ra} specified in the selection tables is permitted in the case of torque transmittion via the flange mounting.

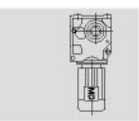

Większe dopuszczalne siły poprzeczne
Highher approved overhung loads

Jest dopuszczalne większe obciążenie wału wyjściowego poprzez zastosowanie wzmocnionych łożysk (szczególnie w przekładniach MDR, MDF i MDK). Dokładne uwzględnienie kąta przyłożenia siły α i kierunku obrotu może także pozwolić na większe obciążenie siłą poprzeczną. W takich przypadkach prosimy o kontakt z naszym biurem technicznym.

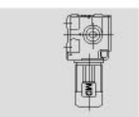

It is possible to achieve a higher overhung load by exactly considering the force application angle α and the direction of rotation. Besides that, higher output shaft loads are permitted if heavy duty bearings are installed (especially with MDR, MDF and MDK gear units). Please contact our company in this case.

Definicja przyłożenia siły
Definition of force application

Przyłożenie siły jest zdefiniowane zgodnie z poniższym rysunkiem:
Force application is defined according to the following diagram:

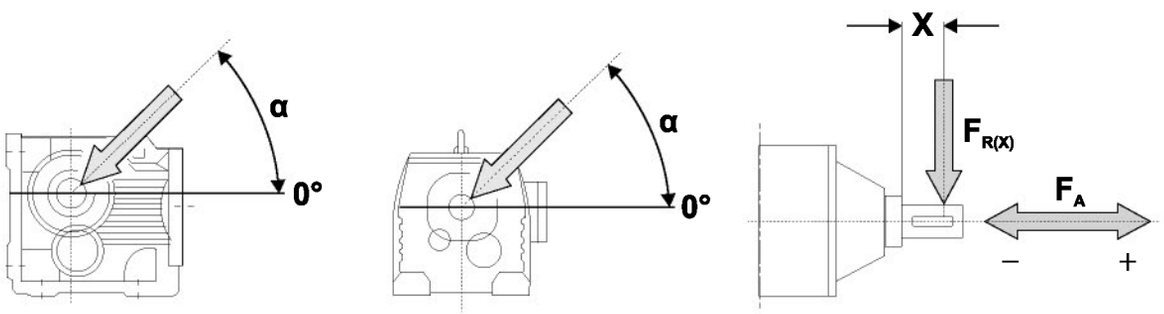

Gdzie *(Where)*:

$F_{R(X)}$ - dopuszczalna siła poprzeczna w miejscu X [w N]
(permitted overhung load at point X in N)

F_A - dopuszczalna siła osiowa [w N]
(permitted axial load in N)

α - kąt przyłożenia siły
(force application angle)

Dopuszczalne siły osiowe
Permitted axial forces

Jeżeli nie występuje obciążenie przez siłę poprzeczną, to jako siła osiowa F_A ("+" oznacza naprężenie rozciągające, a "-" naprężenie naciskające), dozwolone jest 50% siły poprzecznej zgodnie z tabelami doboru. Dotyczy to następujących motoreduktorów:

- Motoreduktory zębate walcowe (za wyjątkiem MDR..137.. ~ MDR..167..)
- Motoreduktory płaskie i walcowo-stożkowe z wałem pełnym (za wyjątkiem MDF97..)
- Motoreduktory ślimakowe z wałem pełnym

Prosimy o kontakt z MegaDrive w przypadku wszystkich pozostałych wersji przekładni oraz w sytuacji, w której dochodzi do znacznie silniejszych sił osiowych lub do obciążeń, które wynikają z połączenia siły poprzecznej i osiowej.

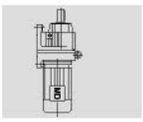

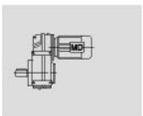

If there is no overhung load, then an axial load F_A (tension or compression) amounting to 50% of the overhung load given in the selection tables is permitted. This applies to the following geared motors:

- *Helical geared motors (except for MDR..137.. to MDR..167..)*
- *Parallel shaft and helical-bevel geared motors with solid shaft (except for MDF97..)*
- *Helical-worm geared motors with solid shaft*

Please contact MegaDrive for all other types of gear units and in the event of significantly greater axial loads or combinations of overhung load and axial load.

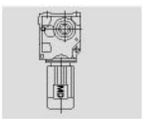

Siła poprzeczna w przypadku przyłożenia w innej pozycji, niż środek czopa
Overhung load conversion for off-center force application

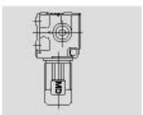

W sytuacji przyłożenia siły w innej pozycji, niż środek czopa końcowego wału, niezbędne jest obliczenie dopuszczalnych sił poprzecznych, zgodnie z tabelami doboru, według poniższych wzorów. Mniejsza z obu wartości $F_{R(XL)}$ (w zależności od żywotności łożysk) oraz $F_{R(XW)}$ (w zależności od wytrzymałości wału) stanowi dopuszczalną wartość siły poprzecznej w miejscu X. Należy pamiętać, że obliczenia dotyczą $M_{a\,max}$.

The permitted overhung loads given in the selection tables must be calculated using the following formulae in the event that force is not applied at the center of the shaft end. The smaller of the two values: $F_{R(XL)}$ (according to bearing life) and $F_{R(XW)}$ (according to shaft strength) is the approved value for the overhung load at point X. Note that the calculations apply to $M_{a\,max}$.

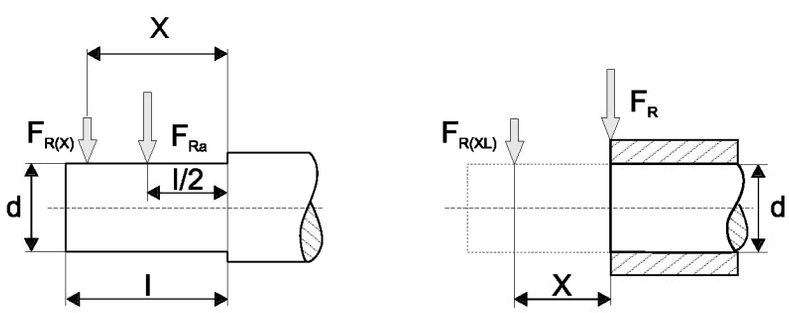

$F_{R(XL)}$ - w zależności od żywotności łożysk *(according to bearing life)*

$$F_{R(XL)} = F_{Ra} \cdot \frac{a}{b + X} \quad [N]$$

$F_{R(XW)}$ - w zależności od wytrzymałości wału *(according to shaft strength)*

$$F_{R(XW)} = \frac{c}{f + X} \quad [N]$$

Gdzie *(Where)*:

F_{Ra} - dopuszczalna siła poprzeczna (X= l/2) dla przekładni z łapami zgodnie z tabelą doboru [w N]
(permitted overhung load (X=l/2) for foot mounted gear units according to the selection tables [in N])

X - odległość od wieńca oporowego wału do miejsca przyłożenia siły [w mm]
(distance from the shaft shoulder to the force application point [in mm])

a,b,f - stałe przekładni do przeliczania siły poprzecznej [w mm]
(gear unit contstants for overhung load conversion [in mm])

c - stała przekładni do przeliczania siły poprzecznej [wNmm]
(gear unit contstant for overhung load conversion [in Nmm])

Stałe charakterystyczne dla przekładni do przeliczenia siły promieniowej
Gear unit constants for overhung load conversion

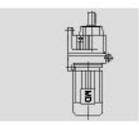
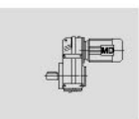
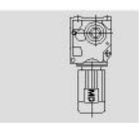
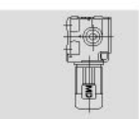

Typ przekładni *Gear unit type*	a [mm]	b [mm]	c [Nmm]	f [mm]	d [mm]	l [mm]
MDR17	88.5	68.5	6.527×10^{4}	17	20	40
MDR27	106.5	81.5	1.56×10^{5}	11.8	25	50
MDR37	118	93	1.24×10^{5}	0	25	50
MDR47	137	107	2.44×10^{5}	15	20	60
MDR57	147.5	112.5	3.77×10^{5}	18	35	70
MDR67	168.5	133.5	2.51×10^{5}	0	35	70
MDR77	173.7	133.7	3.97×10^{5}	0	40	80
MDR87	216.7	166.7	8.47×10^{5}	0	50	100
MDR97	255.5	195.5	1.19×10^{6}	0	60	120
MDR107	285.5	215.5	2.06×10^{6}	0	70	140
MDR137	343.5	258.5	6.14×10^{6}	30	90	170
MDR147	402	297	8.65×10^{6}	33	110	210
MDR167	450	345	1.26×10^{7}	0	120	210
MDR177	621.5	496.5	1.88×10^{7}	0	160	250
MDR187	720.5	560.5	3.04×10^{7}	0	190	320
MDRX57	43.5	23.5	1.51×10^{5}	34.2	20	40
MDRX67	52.5	27.5	2.42×10^{5}	39.7	25	50
MDRX77	60.5	30.5	1.95×10^{5}	0	30	60
MDRX87	73.5	33.5	7.69×10^{5}	48.9	40	80
MDRX97	86.5	36.5	1.43×10^{6}	53.9	50	100
MDRX107	102.5	42.5	2.47×10^{6}	62.3	60	120
MDF37	123.5	98.5	1.07×10^{5}	0	25	50
MDF47	153.5	123.5	1.78×10^{5}	0	30	60
MDF57	170.7	135.7	5.49×10^{5}	32	35	70
MDF67	181.3	141.3	4.12×10^{5}	0	40	80
MDF77	215.8	165.8	7.87×10^{5}	0	50	100
MDF87	263	203	1.19×10^{6}	0	60	120
MDF97	350	280	2.09×10^{6}	0	70	140
MDF107	373.5	288.5	4.23×10^{6}	0	90	170
MDF127	442.5	337.5	9.49×10^{6}	0	110	210
MDF157	512	407	1.05×10^{7}	0	120	210
MDF167	621.5	496.5	1.88×10^{7}	0	160	250
MDR37	123.5	98.5	1.41×10^{5}	0	25	50
MDR47	153.5	123.5	1.78×10^{5}	0	30	60
MDR57	169.7	134.7	6.8×10^{5}	31	35	70
MDR67	181.3	141.3	4.12×10^{5}	0	40	80
MDR77	215.8	165.8	7.69×10^{5}	0	50	100
MDR87	252	192	1.64×10^{6}	0	60	120
MDR97	319	249	2.8×10^{6}	0	70	140
MDR107	373.5	288.5	5.53×10^{6}	0	90	170
MDR127	443.5	338.5	8.31×10^{6}	0	110	210
MDR157	509	404	1.18×10^{7}	0	120	210
MDR167	621.5	496.5	1.88×10^{7}	0	160	250
MDR187	720.5	560.5	3.04×10^{7}	0	190	320
MDS37	118.5	98.5	6.0×10^{4}	0	20	40
MDS47	130	105	1.33×10^{5}	0	25	50
MDS57	150	120	2.14×10^{5}	0	30	60
MDS67	184	149	3.04×10^{5}	0	35	70
MDS77	224	179	5.26×10^{5}	0	45	90
MDS87	281.5	221.5	1.68×10^{6}	0	60	120
MDS97	326.3	256.3	2.54×10^{6}	0	70	140

Wartości dla wersji nie wymienionych są dostępne na życzenie.
Values for types not listed are available on request.

4.7. Projektowanie przy użyciu przekładni MDRM

Podczas projektowania motoreduktorów zębatych walcowych MDRM z przedłużoną piastą łożyska, należy koniecznie uwzględnić wyższe siły poprzeczne i osiowe, a także zwrócić uwagę na poniższy przebieg procesu projektowania:

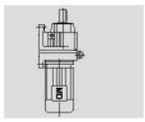

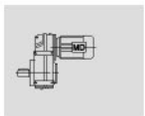

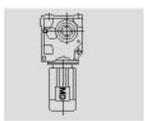

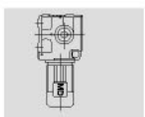

- **a** = przelicznik z tabeli danych
- **b** = przelicznik z tabeli danych
- **c_F** = stała przekładni z tabeli danych
- **F_a** = występująca siła osiowa w trakcie pracy
- **F_F** = stała przekładni z tabeli danych
- **F_R** = występująca siła poprzeczna w trakcie pracy
- **F_{Ra}**= dopuszczalna siła poprzeczna (x=1000mm) z tabeli danych
- **F_{XF}**= dopuszczalna siła poprzeczna przy obudowie (odporność kołnierza)
- **F_{XL}**= dopuszczalna siła poprzeczna w oparciu o żywotność łożysk
- **X** = odstep od miejsca przyłożenia siły do wieńca oporowego wału
- **M_a**= moment obrotowy wyjściowy
- **F_{Aa}**= dopuszczalna siła osiowa

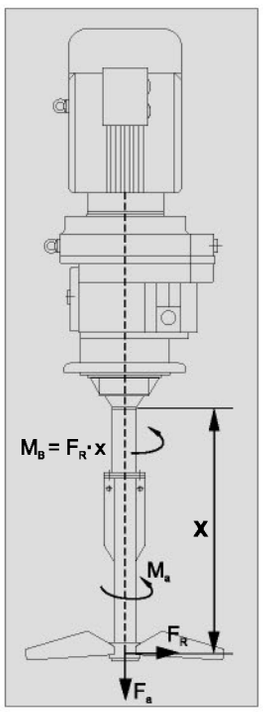

Rozpoczęcie planowania projektu

Ustalenie wymogów aplikacyjnych:
- Zakres mocy
- Moment obrotowy
- Wyjściowa prędkość obrotowa
- Siła poprzeczna (F_R) / siła osiowa (F_a)
- Ramię dźwigni (rozmiar x)

Wybór min. wymogów eksploatacyjnych, np.:
- f_{Bmin} = 1.5 dla $L_{10h} \geq$ 10.000 h
- f_{Bmin} = 2.0 dla $L_{10h} \geq$ 25.000 h

inne wymogi dostępne na życzenie

Wybór wielkości przekładni na podstawie min. współczynnika bezpieczeństwa:
$f_{Bmin} \leq f_{Bmin\ (przekładnia)}$

Sprawdzić siłę poprzeczną (łożysko/wał)?
$F_R \leq F_{XL} = F_{Ra} \cdot a/(x+b)$

nie → **Wybrać następną co do wielkości przekładnię**

tak ↓

wymiar x < 500 mm?

nie → **Sprawdzić siłę poprzeczną (kołnierz)?**
$F_R \leq F_{XF} = c_F/(F_F+x)$

nie → **Wybrać następną co do wielkości przekładnię**

tak ↓

Sprawdzić siłę osiową?
$F_a \leq F_{Aa}$

nie → **$(F_R \cdot x/F_{Aa}) < 100$**

nie → **Wybrać następną co do wielkości przekładnię**

tak → **$F_A / M_a > 3$**

tak → **Rozwiązanie specjalne na życzenie**

nie ↓

tak ↓

Sprawdzić wymiary skojarzone

Potrzebna wersja dodatkowa?

tak → **Ustalenia wymaganych wersji dodatkowych:**
- Podwójne uszczelnienie przekładni
- Wersja dry-well (wersja specjalna)
- System wykrywania nieszczelności (wersja specjalna)
- Smarowanie uzupełniające łożysk (wersja specjalna)

nie ↓

Zakończenie planowania projektu

4.7. Project planning procedure for MDRM gear units

You must take account of the higher overhung and axial loads when planning projects with MDRM helical gearmotors with an extended bearing housing. Please observe the following project planning procedure:

- a = conversion factor from data table
- b = conversion factor from data table
- c_F = gear unit constant from data table
- F_a = axial load during operation
- F_F = gear unit constant from data table
- F_R = overhung load during operation
- F_{Ra} = permissible overhung load (at x=1000mm) from data table
- F_{XF} = permissible overhung load on the housing (flange tensile strength)
- F_{XL} = permissible overhung load according to bearing service life
- X = distance between force application and shaft shoulder
- M_a = output torque
- F_{Aa} = permitted axial load

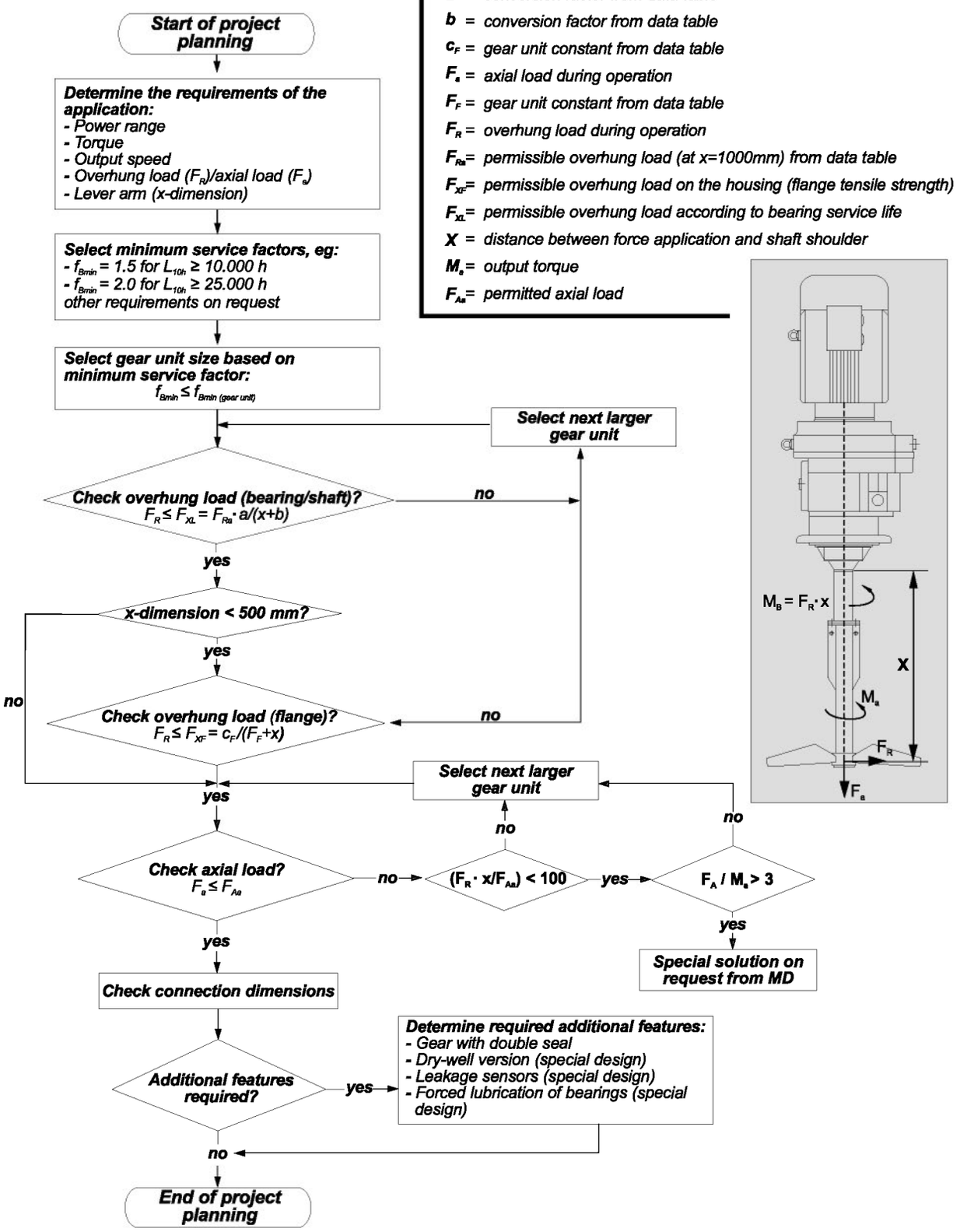

Dopuszczalne siły poprzeczne i osiowe
Permitted overhung loads and axial forces

Dopuszczalne siły poprzeczne F_{Ra} i osiowe F_{Aa} zostały podane dla różnych współczynników bezpieczeństwa f_B i nominalnej żywotności łożysk L_{10h}
The permitted overhung loads F_{Ra} and axial loads F_{Aa} are specified for various service factors f_B and nominal bearing service life L_{10h}

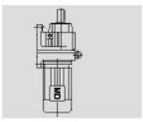
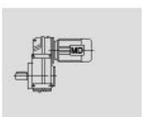
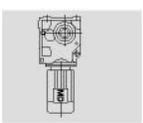
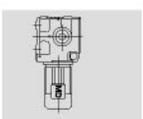

f_{Bmin}=1.5
L_{10h}=10000h

Typ przekładni *Gear unit type*	n_a[rpm]	<16	16-25	26-40	41-60	61-100	101-160	161-250	251-400
MDRM57	F_{Ra} [N]	400	400	400	400	400	405	410	415
	F_{Aa} [N]	18800	15000	11500	9700	7100	5650	4450	3800
MDRM67	F_{Ra} [N]	575	575	575	580	575	585	590	600
	F_{Aa} [N]	19000	18900	15300	11900	9210	7470	5870	5050
MDRM77	F_{Ra} [N]	1200	1200	1200	1200	1200	1210	1210	1220
	F_{Aa} [N]	22000	22000	19400	15100	11400	9220	7200	6710
MDRM87	F_{Ra} [N]	1970	1970	1970	1970	1980	1990	2000	2010
	F_{Aa} [N]	30000	30000	23600	18000	14300	11000	8940	8030
MDRM97	F_{Ra} [N]	2980	2980	2980	2990	3010	3050	3060	3080
	F_{Aa} [N]	40000	36100	27300	20300	15900	12600	9640	7810
MDRM107	F_{Ra} [N]	4230	4230	4230	4230	4230	4230	3580	3830
	F_{Aa} [N]	48000	41000	30300	23000	18000	13100	9550	9030
MDRM137	F_{Ra} [N]	8710	8710	8710	8710	7220	5060	3980	6750
	F_{Aa} [N]	70000	70000	70000	57600	46900	44000	35600	32400
MDRM147	F_{Ra} [N]	11100	11100	11100	11100	11100	10600	8640	10800
	F_{Aa} [N]	70000	70000	69700	58400	45600	38000	32800	30800
MDRM167	F_{Ra} [N]	14600	14600	14600	14600	14600	14700	-	-
	F_{Aa} [N]	70000	70000	70000	60300	45300	36900	-	-

f_{Bmin}=2.0
L_{10h}=25000h

Typ przekładni *Gear unit type*	Na[rpm]	<16	16-25	26-40	41-60	61-100	101-160	161-250	251-400
MDRM57	F_{Ra} [N]	410	410	410	410	410	415	415	420
	F_{Aa} [N]	12100	9600	7350	6050	4300	3350	2600	2200
MDRM67	F_{Ra} [N]	590	590	590	595	590	595	600	605
	F_{Aa} [N]	15800	12000	9580	7330	5580	4460	3460	2930
MDRM77	F_{Ra} [N]	1210	1210	1210	1210	1210	1220	1220	1220
	F_{Aa} [N]	20000	15400	11900	9070	6670	5280	4010	3700
MDRM87	F_{Ra} [N]	2000	2000	2000	2000	2000	1720	1690	1710
	F_{Aa} [N]	24600	19200	14300	10600	8190	6100	5490	4860
MDRM97	F_{Ra} [N]	3040	3040	3040	3050	3070	3080	2540	2430
	F_{Aa} [N]	28400	22000	16200	11600	8850	6840	5830	4760
MDRM107	F_{Ra} [N]	4330	4330	4330	4330	4330	3350	2810	2990
	F_{Aa} [N]	32300	24800	17800	13000	9780	8170	5950	5620
MDRM137	F_{Ra} [N]	8850	8850	8850	8830	5660	4020	3200	5240
	F_{Aa} [N]	70000	59900	48000	37900	33800	31700	25600	23300
MDRM147	F_{Ra} [N]	11400	11400	11400	11400	11400	8320	6850	8440
	F_{Aa} [N]	70000	60600	45900	39900	33500	27900	24100	22600
MDRM167	F_{Ra} [N]	15100	15100	15100	15100	15100	13100	-	-
	F_{Aa} [N]	70000	63500	51600	37800	26800	23600	-	-

Przeliczniki i stałe przekładni
Conversion factors and gear unit constants

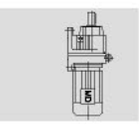
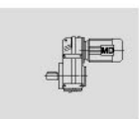
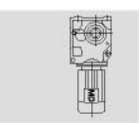
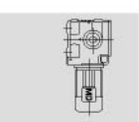

Podczas obliczania dopuszczalnej siły poprzecznej F_{XL} w miejscu x ≠ 1000 mm, dla motoreduktorów MDRM obowiązują następujące przeliczniki i stałe przekładni:
The following conversion factors and gear units constants apply to calculating the permitted overhung load F_{XL} at point x ≠ 1000 mm for MDRM gearboxes:

Typ przekładni *Gear unit type*	a	b	$c_F(f_B=1.5)$	$C_F(f_B=2.0)$	F_F
MDRM57	1047	47	1220600	1260400	277
MDRM67	1047	47	2047600	2100000	297.5
MDRM77	1050	50	2512800	2574700	340.5
MDRM87	1056.5	56.5	4917800	5029000	414
MDRM97	1061	61	10911600	11124100	481
MDRM107	1069	69	15367000	15652000	554.5
MDRM137	1088	88	25291700	25993600	650
MDRM147	1091	91	30038700	31173900	756
MDRM167	1089.5	89.5	42096100	43654300	869

Dodatkowa waga przekładni MDRM
Additional weight of MDRM gear units

Typ przekładni *Gear unit type*	Dodatkowa waga w stosunku do MDRF, w odniesieniu do najmniejszego kołnierza MDRF *Additional weight compared to MDRF, related to the smallest MDRF flange* Δm [kg]
MDRM57	12.0
MDRM67	15.8
MDRM77	25.0
MDRM87	29.7
MDRM97	51.3
MDRM107	88.0
MDRM137	111.1
MDRM147	167.4
MDRM167	195.4

5. **Seria MDR** - przekładnie walcowe proste
*5. **MDR series** - helical gearmotors*

5.1. Wersje przekładni
5.1. Versions of gearmotors

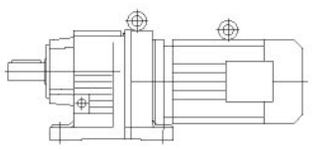
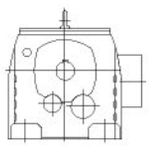

MDR..D..

Montaż łapowy
Foot-mounted helical geared motor

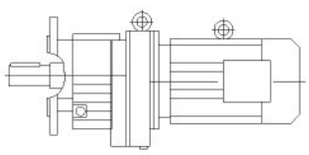
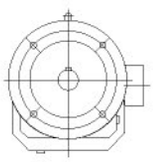

MDRF..D..

Montaż kołnierzowy
Flange-mounted helical geared motor

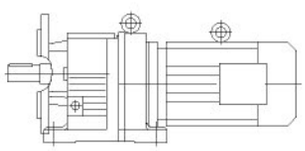
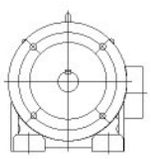

MDR..F D..

Montaż łapowo-kołnierzowy
Foot and flange-mounted helical geared motor
(MDR17-MDR87)

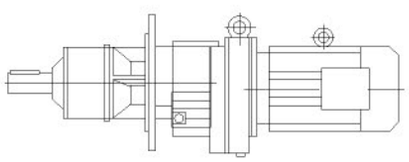
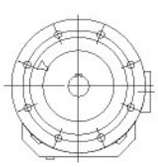

MDRM..D..

Montaż kołnierzowy z przedłużoną piastą łożyska
Flange-mounted helical geared motor with extended bearing housing

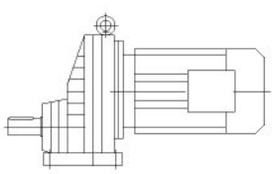
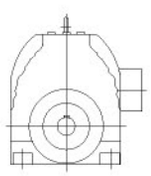

MDRX..D..

Jednostopniowa wersja na łapach
Single-stage foot-mounted helical geared motor

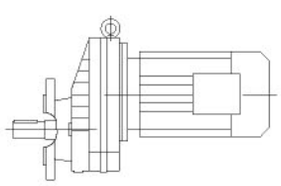
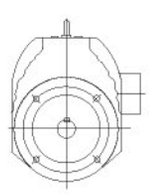

MDRXF..D..

Jednostopniowa wersja z kołnierzem B5
Single-stage flange-mounted helical geared motor

5.2. Kombinacje
5.2. Type of combination

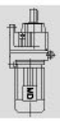

Możliwe kombinacje wielkości przełożenia i silnika.
A combination table in each ratio range between gearbox and electric motor.

Wielkość przekładni *Gear unit size*	Ilość stopni *Stages*	D63 /D71	D80	D90	D100	D112	D132S	D132M
MDRX/RXF57	1	1.65-5.50	1.30-4.35	1.30-3.79	1.30-2.64 3.14	1.30-2.64	1.30-2.04	1.30-2.04
MDRX/RXF67	1	2.04-6.07	1.61-5.18	1.40-4.53	1.40-3.77	1.40-3.20	1.40-2.54	1.40-2.54
MDRX/RXF77	1	2.70-8.00	2.13-6.41	1.42-5.63	1.42-4.73	1.42-4.04	1.42-3.25	1.42-3.25
MDRX/RXF87	1		3.09-8.65	2.15-7.63	1.60-6.45	1.60-5.56	1.39-4.50	1.39-4.50
MDRX/RXF97	1		4.04-8.23	2.92-8.23	2.24-8.23	2.24-7.16	1.42-5.79	1.42-5.79
MDRX/RXF107	1				2.64-6.63	2.64-6.63	1.71-6.63	1.71-6.63
MDR/RF17	2	3.83-25.23	3.83-19.71					
MDR/RF17	3	24.07-81.64	24.07-81.64	3.37-8.16				
MDR/RF27	2	3.37-28.37	3.37-22.32	10.13-19.35	3.37-6.59 10.13-15.63			
MDR/RF27	3	24.47-135.09	24.47-105.49	24.47-48.17 61.30-90.96	24.47-32.47 39.25 61.30 74.11			
MDR/RF37	2	3.41-28.32	3.41-22.27	3.41-19.31	3.41-15.60			
MDR/RF37	3	24.42-134.82	24.42-105.28	24.42-48.08 61.18-90.77	24.42-32.40 39.17 61.18 73.96			
MDR/RF47	2	4.85-7.76 10.15-33.79	3.83-26.74	3.83-23.28	3.83-16.22 19.27	3.83-16.22	3.83-6.00 8.01-12.54	3.83-6.00 8.01-12.54
MDR/RF47	3	29.88-176.88	23.59-139.99	23.59-121.87	23.59-47.75 56.73 76.23-84.90 100.86	23.59-47.75		23.59-36.93
MDR/RF57	2	6.41-9.06 11.88-26.31	5.05-26.31	4.39-26.31	4.39-21.93	4.39-18.60	4.39-7.97 9.35-14.77	4.39-7.97 9.35-14.77
MDR/RF57	3	30.18-186.89	26.97-147.92	26.97-128.77	26.97-48.23 57.29 80.55-89.71 106.58	26.97-48.23 80.55-89.71	26.97-37.30	26.97-37.30
MDR/RF67	2	6.27-7.79 12.70-28.13	4.93-7.79 10.00-28.13	4.29-28.13	4.29-23.44	4.29-19.89	4.29-15.79	4.29-15.79
MDR/RF67	3	32.27-199.81	28.83-158.14	28.83-137.67	28.83-51.56 61.26-95.91 113.94	28.83-51.56 69.75-95.91	28.83-39.88 69.75-74.17	28.83-39.88 69.75-74.17
MDR/RF77	2	8.59 15.60-23.37	6.79-8.59 12.33-23.37	5.31-23.37	5.31-23.37	5.31-23.37	5.31-18.80	5.31-18.80
MDR/RF77	3	36.83-195.24	29.00-166.59	25.23-145.67	25.23-121.42	25.23-102.99	25.23-45.81 65.77-81.80	25.23-45.81 65.77-81.80
MDR/RF87	2		19.10-34.40	7.13-9.14 13.33-34.40	5.30-34.40	5.30-34.40	5.30-27.84	5.30-27.84
MDR/RF87	3		41.74-246.54	27.88-216.54	27.88-181.77	27.88-155.34	27.88-63.68 81.92-124.97	27.88-63.68 81.92-124.97
MDR/RF97	2		22.37-32.05	9.29 16.17-32.05	7.12-9.29 12.39-32.05	7.12-9.29 12.39-32.05	4.50-32.05	4.50-32.05
MDR/RF97	3		53.21-65.21 103.44-289.74	37.13-255.71	27.58-216.28	27.58-186.30	27.58-150.78	27.58-150.78
MDR/RF107	2				15.65-30.77	15.65-30.77	5.82-7.86 10.13-30.77	5.82-7.86 10.13-30.77
MDR/RF107	3					40.37-251.15	29.49-203.16	29.49-203.16
MDR/RF137	2						7.59 12.83-29.57	7.59 12.83-29.57
MDR/RF137	3						32.91-222.60	32.91-222.60

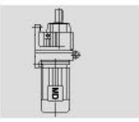

Wielkość przekładni *Gear unit size*	Ilość stopni *Stages*	D160S	D160M	D160L	D180	D200	D225	D250M
MDRX/RXF77	1	1.42-2.43	1.42-2.43					
MDRX/RXF87	1	1.39-3.48	1.39-3.48	1.39-3.48	1.39-2.76			
MDRX/RXF97	1	1.42-4.52	1.42-4.52	1.42-4.52	1.42-3.64	1.42-29.2		
MDRX/RXF107	1	1.44-5.19	1.44-5.19	1.44-5.19	1.44-4.20	1.44-3.38	1.44-3.38	
MDR/RF77	2	5.31-7.74 9.64-14.05	5.31-7.74 9.64-14.05					
MDR/RF77	3	25.23-33.47	25.23-33.47					
MDR/RF87	2	5.30-21.51	5.30-21.51	5.30-21.51	5.30-17.08			
MDR/RF87	3	27.88-47.58 81.92-93.38	27.88-47.58 81.92-93.38	27.88-47.58 81.92-93.38	27.88-36.84			
MDR/RF97	2	4.50-25.03	4.50-25.03	4.50-25.03	4.50-20.14	4.50-16.17		
MDR/RF97	3	27.58-59.92 72.17-116.48	27.58-59.92 72.17-116.48	27.58-59.92 72.17-116.48	27.58-47.58 72.17-92.48	27.58-37.13 72.17		
MDR/RF107	2	4.92-30.77	4.92-30.77	4.92-30.77	4.92-24.90	4.92-20.07	4.92-20.07	
MDR/RF107	3	29.49-158.68	29.49-158.68	29.49-158.68	29.49-65.60 78.57-127.68	29.49-52.68 78.57-102.53	29.49-52.68 78.57-102.53	
MDR/RF137	2	6.38-7.59 10.79-29.57	6.38-7.59 10.79-29.57	6.38-7.59 10.79-29.57	5.15-29.57	5.15-24.12	5.15-24.12	5.15-19.04
MDR/RF137	3	27.83-174.40	27.83-174.40	27.83-174.40	27.83-141.12	27.83-65.20 88.70-113.72	27.83-65.20 88.70-113.72	27.83-50.86 88.70
MDR/RF147	2	7.25 11.99-20.44	7.25 11.99-20.44	7.25 11.99-20.44	5.89-7.25 9.74-20.44	5.00-20.44	5.00-20.44	5.00-20.44
MDR/RF147	3	29.95-163.31	29.95-163.31	29.95-163.31	24.19-146.91	24.19-119.86	24.19-119.86	24.19-52.87 72.09-94.60
MDR/RF167	2		14.48-46.00	14.48-46.00	11.99-37.74	10.24-30.71	10.24-30.71	10.24-24.57
MDR/RF167	3		34.41-229.71	34.41-229.71	27.96-186.93	23.71-153.07	23.71-153.07	23.71-58.65 82.91-121.81
MDR177/RF177	2	11.37-36.12	11.37-36.12	11.37-36.12	9.6-29.64	8.19-24.12	8.19-24.12	8.19-19.29
MDR177/RF177	3	24.56-32.3 57.51-182.73	24.56-32.3 57.51-182.73	24.56-32.3 57.51-182.73	20.35-32.3 57.51-149.94	17.37-122	17.37-122	17.37-97.6
MDR187/RF187	2				9.57 13.26-20.19	8.16-20.19	8.16-20.19	8.16-20.19
MDR187/RF187	3				21.21 66.15-160.87	18.08-160.87	18.08-160.87	18.08-129.32

Wielkość przekładni *Gear unit size*	Ilość stopni *Stages*	D280	D315	D315M–A/B				
MDR/RF147	2	5.00-20.44						
MDR/RF147	3	24.19-52.87 72.09-94.60						
MDR/RF167	2	10.24-24.57	10.24-19.03	10.24-14.48				
MDR/RF167	3	23.71-58.65 82.91-121.81	23.71-44.87 82.91-93.19	23.71-34.41				
MDR177/RF177	2	8.19-19.29	8.19-14.95	8.19-11.37				
MDR177/RF177	3	17.37-97.6	17.37-75.62	17.37-24.56 40.67-57.51				
MDR187/RF187	2	8.16-20.19	8.16-20.19	8.16-15.78				
MDR187/RF187	3	18.08-129.32	18.08-100.71	18.08-34.98 47.73-78.71				

5.3. Przełożenia i momenty maksymalne

5.3. Ratio and max torque

MDRX57-107 n_e=1400 1/min

MDRX57			70Nm	
i	n_a [1/min]	M_{amax} [Nm]	F_{Ra} [N]	AD
5.50	255	39	3010	AD2
5.07	276	36	3030	
4.35	322	68	2640	
3.79	369	69	2480	
3.55	394	69	2420	
3.14	446	65	2320	
2.91	481	67	2170	
2.64	530	69	1810	
2.37	591	69	1500	AD3
2.04	686	69	1070	
1.92	729	69	890	
1.65	848	69	430	
1.48	946	68	112	
1.30	1075	63	132	

MDRX67			135Nm	
i	n_a [1/min]	M_{amax} [Nm]	F_{Ra} [N]	AD
6.07	231	43	4010	AD2
5.18	270	75	3580	
4.53	309	82	3350	
4.30	326	80	3300	
3.77	371	87	3090	
3.20	438	100	2800	AD3
2.89	484	106	2640	
2.54	551	118	2000	
2.40	583	123	1530	
2.04	686	134	230	
1.86	753	126	225	
1.61	870	114	245	
1.40	1000	104	205	

MDRX77			215Nm	
i	n_a [1/min]	M_{amax} [Nm]	F_{Ra} [N]	AD
8.00	175	57	6330	AD2
7.47	187	53	6200	
6.41	218	103	5600	
5.63	249	110	5300	
5.35	262	103	5240	
4.73	296	123	4900	AD3
4.04	347	143	4500	
3.70	378	153	4290	
3.25	431	182	3200	AD4
3.08	455	193	2560	
2.70	519	215	1110	
2.43	576	215	510	
2.13	657	200	435	
1.88	745	187	335	
1.67	838	173	315	
1.42	986	155	315	

MDRX87			400Nm	
i	n_a [1/min]	M_{amax} [Nm]	F_{Ra} [N]	AD
8.65	162	139	7890	AD2
7.63	183	149	7490	
7.20	194	140	7380	
6.45	217	192	6850	AD3
5.56	252	225	6320	
5.07	276	250	5980	
4.50	311	290	5500	AD4
3.78	370	305	5030	
3.48	402	405	2730	AD5
3.09	453	405	1950	
2.76	507	405	1200	
2.48	565	405	470	
2.15	651	385	42	
1.93	725	355	185	
1.60	875	315	74	
1.39	1005	290	74	

MDRX97			600Nm	
i	n_a [1/min]	M_{amax} [Nm]	F_{Ra} [N]	AD
8.23	170	225	9560	AD3
7.16	196	260	8950	
6.56	213	300	8500	
5.79	242	420	7630	AD4
4.91	285	395	7220	
4.52	310	595	6180	AD5
4.04	347	595	5380	
3.64	385	595	4530	
3.30	424	595	3730	
2.92	479	595	2810	
2.64	530	595	1980	
2.24	625	595	495	
1.96	714	570	19	
1.64	854	505	51	
1.42	986	455	132	AD6

MDRX107			830Nm	
i	n_a [1/min]	M_{amax} [Nm]	F_{Ra} [N]	AD
6.63	211	460	9700	AD4
5.61	250	455	9080	
5.19	270	695	7850	AD5
4.65	301	695	7450	
4.20	333	830	6420	
3.81	367	830	5550	
3.38	414	830	4490	
3.07	456	830	3600	AD6
2.64	530	830	2170	
2.30	609	830	900	
1.95	718	765	555	
1.71	819	705	480	
1.44	972	645	315	

MDR17-37 n_e=1400 1/min

MDR17			85Nm
i	n_a [1/min]	M_{amax} [Nm]	F_{Ra} [N]
3-st.			
81.64	17	85	1770
70.39	20	85	1770
65.61	21	85	1770
57.35	24	85	1770
53.76	26	85	1770
47.44	30	85	1770
44.18	32	85	1770
38.61	36	85	1770
36.20	39	85	1770
31.94	44	85	1770
28.32	49	85	1770
24.07	58	85	1650
2-st.			
25.23	55	85	1690
23.15	60	85	1620
19.71	71	85	1500
16.99	82	85	1400
15.84	88	85	1350
13.84	101	85	1270
12.98	108	85	1230
11.45	122	81	1180
10.15	138	77	1140
8.63	162	72	1090
7.55	185	56	1040
7.04	199	55	1010
6.15	228	54	950
5.76	243	53	930
5.09	275	51	890
4.51	310	48	870
3.83	366	45	830

MDR27			130Nm	
i	n_a [1/min]	M_{amax} [Nm]	F_{Ra} [N]	AD
3-st.				
135.09	10	130	4230	
123.91	11	130	4230	
105.49	13	130	4230	AD1
90.96	15	130	4230	
84.78	17	130	4230	
74.11	19	130	4230	
69.47	20	130	4180	
61.30	23	130	3980	
55.87	25	130	3840	
48.17	29	130	3630	
44.90	31	130	3530	AD1
39.25	36	130	3350	
36.79	38	130	3260	
32.47	43	130	3100	
28.78	49	130	2950	
24.47	57	130	2770	
2-st.				
28.37	49	130	2940	
26.09	54	130	2840	
22.32	63	130	2660	
19.35	72	130	2510	
18.08	77	130	2440	
15.63	90	130	2290	
13.28	105	130	2140	
11.86	118	129	1990	
10.13	138	122	1890	
9.41	149	122	900	AD2
8.16	172	116	870	
7.63	183	112	900	
6.59	212	106	880	
5.60	250	99	880	
5.00	280	95	860	
4.27	328	87	920	
4.00	350	85	910	
3.37	415	79	900	

MDR37			200Nm	
i	n_a [1/min]	M_{amax} [Nm]	F_{Ra} [N]	AD
3-st.				
134.82	10	200	4950	
123.66	11	200	4950	
105.28	13	200	4950	
90.77	15	200	4950	
84.61	17	200	4950	AD1
73.96	19	200	4950	
69.33	20	200	4950	
61.18	23	200	4950	
55.76	25	200	4950	
48.08	29	200	4950	
44.81	31	200	4950	
39.17	36	200	4760	
36.72	38	200	4540	AD2
32.40	43	200	4120	
28.73	49	200	3740	
24.42	57	200	3240	
2-st.				
28.32	49	200	3690	
26.03	54	185	3860	
22.27	63	200	2970	
19.31	73	200	2570	
18.05	78	200	2390	
15.60	90	200	2010	
13.25	106	190	1880	
11.83	118	183	1810	AD2
10.11	138	170	1820	
9.47	148	167	1760	
7.97	176	156	1720	
6.67	210	144	1000	
5.67	247	142	760	
5.06	277	135	790	
4.32	324	126	820	
4.05	346	122	850	
3.41	411	112	900	

MDR47-67 n_e=1400 1/min

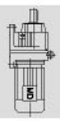

MDR47 — 300Nm

i	n_a [1/min]	M_{amax} [Nm]	F_{Ra} [N]	AD
3-st.				
176.88	7.9	300	5420	AD2
162.94	8.6	300	5420	
139.99	10	300	5420	
121.87	11	300	5420	
114.17	12	300	5420	
100.86	14	300	5420	
93.68	15	300	5420	
84.90	16	300	5420	
76.23	18	300	5420	
68.54	20	300	5420	
64.21	22	300	5420	
56.73	25	300	5420	
52.69	27	300	5350	
47.75	29	300	5150	
42.87	33	300	4930	
36.93	38	300	4630	
34.73	40	300	4520	
29.88	47	300	4240	
26.70	52	300	4050	
23.59	59	300	3840	
2-st.				
33.79	41	240	4690	AD2
31.12	45	220	4610	
26.74	52	300	4050	
23.28	60	300	3820	
21.81	64	300	3710	
19.27	73	295	3530	
17.89	78	290	3390	
16.22	86	275	3350	
14.56	96	265	3230	
12.54	112	250	3080	
11.79	119	245	3020	
10.15	138	230	2890	
9.07	154	220	2780	
8.01	175	205	2690	
7.76	180	163	2720	
6.96	201	159	2620	
6.00	233	156	2470	
5.64	248	155	2410	
4.85	289	150	2280	
4.34	323	146	2190	
3.83	366	144	2090	AD3

MDR57 — 450Nm

i	n_a [1/min]	M_{amax} [Nm]	F_{Ra} [N]	AD
3-st.				
186.89	7.5	450	7110	AD2
172.17	8.1	450	7110	
147.92	9.5	450	7110	
128.77	11	450	7110	
120.63	12	450	7110	
106.58	13	450	7110	
98.99	14	450	7110	
89.71	16	450	7110	
80.55	17	450	7110	
69.23	20	450	7110	
64.85	22	450	6980	
57.29	24	450	6630	
53.22	26	450	6430	
48.23	29	450	6170	
43.30	32	450	5900	
37.30	38	450	5530	
35.07	40	450	5390	
30.18	46	450	5050	
26.97	52	450	4800	
2-st.				
26.31	53	450	4750	AD2
24.99	56	450	4640	
21.93	64	450	4370	
18.60	75	450	4050	
16.79	83	450	3860	
14.77	95	435	3690	
13.95	100	430	3610	AD3
11.88	118	405	3430	
10.79	130	390	3330	
9.35	150	370	3180	
9.06	155	375	2010	
7.97	176	355	2020	
7.53	186	350	1950	
6.41	218	335	1770	
5.82	241	320	1820	
5.05	277	305	1730	
4.39	319	280	1900	

MDR67 — 600Nm

i	n_a [1/min]	M_{amax} [Nm]	F_{Ra} [N]	AD
3-st.				
199.81	7.0	600	7650	AD2
184.07	7.6	600	7650	
158.14	8.9	600	7650	
137.67	10	600	7650	
128.97	11	600	7650	
113.94	12	600	7650	
105.83	13	600	7650	
95.91	15	600	7650	
86.11	16	600	7650	
74.17	19	600	7650	
69.75	20	600	7650	
61.26	23	600	7650	
56.89	25	600	7650	
51.56	27	600	7650	
46.29	30	600	7650	
39.88	35	580	7790	
37.50	37	570	7900	
32.27	43	540	8210	
28.83	49	520	8400	
2-st.				
28.13	50	540	8210	AD2
26.72	52	540	8210	
23.44	60	560	8010	
19.89	70	600	7560	AD3
17.95	78	590	7330	
15.79	89	560	7130	
14.91	94	550	6980	
12.70	110	520	6650	
11.54	121	500	6500	
10.00	140	470	6220	
8.70	161	440	5960	
7.79	180	380	5830	
7.36	190	370	5790	
6.27	223	330	5590	
5.70	246	310	5450	
4.93	284	290	5210	
4.29	326	270	5000	

MDR77-97 n_e=1400 1/min

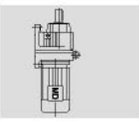

MDR77			820Nm	
i	n_a [1/min]	M_{amax} [Nm]	F_{Ra} [N]	AD
3-st.				
195.24	7.2	820	9920	AD_2
166.59	8.4	820	9920	
145.67	9.6	820	9920	
138.39	10	820	9920	
121.42	12	820	9920	
102.99	14	820	9920	
92.97	15	820	9920	
81.80	17	820	9920	
77.24	18	820	9920	
65.77	21	820	9920	
57.68	24	820	9920	
52.07	27	820	9920	
45.81	31	820	9920	
43.26	32	820	9920	
36.83	38	820	9920	
33.47	42	820	9920	
29.00	48	820	9920	
25.23	55	780	10100	
2-st.				
23.37	60	820	8870	AD_3
21.43	65	820	8250	
18.80	74	780	7980	
17.82	79	780	7620	
15.60	90	740	7390	
14.05	100	720	7050	
12.33	114	690	6740	
10.88	129	660	6490	
9.64	145	630	6300	
8.59	163	630	4110	AD_4
7.74	181	610	3940	
6.79	206	580	3850	
5.99	234	540	3990	
5.31	264	510	3990	

MDR87			1550Nm	
i	n_a [1/min]	M_{amax} [Nm]	F_{Ra} [N]	AD
3-st.				
246.54	5.7	1550	16900	AD_2
216.54	6.5	1550	16900	
205.71	6.8	1550	16900	
181.77	7.7	1550	16900	
155.34	9.0	1550	16900	
142.41	9.8	1550	16900	
124.97	11	1550	16900	
118.43	12	1550	16900	
103.65	14	1550	16900	
93.38	15	1550	16900	
81.92	17	1550	16900	
72.57	19	1550	16900	
63.68	22	1550	15800	
60.35	23	1550	15200	
52.82	27	1550	13500	
47.58	29	1550	16900	
41.74	34	1550	16900	AD_3
36.84	38	1550	16800	
32.66	43	1550	16000	
27.88	50	1550	15100	
2-st.				
34.40	41	1550	9480	AD_3
31.40	45	1550	7820	
27.84	50	1550	15000	AD_4
23.40	60	1550	13900	
21.51	65	1550	13600	
19.10	73	1440	13000	
17.08	82	1390	12600	
15.35	91	1340	12100	
13.33	105	1280	11600	
11.93	117	1230	11200	
9.90	141	1180	10400	
9.14	153	1210	10500	AD_5
8.22	170	1160	10200	
7.13	196	1070	9780	
6.39	219	1020	9450	
5.30	254	910	8980	

MDR97			3000Nm	
i	n_a [1/min]	M_{amax} [Nm]	F_{Ra} [N]	AD
3-st.				
289.74	4.8	3000	19800	AD_3
255.71	5.5	3000	19800	
241.25	5.8	3000	19800	
216.28	6.5	3000	19800	
186.30	7.5	3000	19800	
170.02	8.2	3000	19800	
150.78	9.3	3000	19800	
126.75	11	3000	19800	
116.48	12	3000	19800	
103.44	14	3000	19800	
92.48	15	3000	19800	
83.15	17	3000	19800	
72.17	19	3000	19800	
65.21	21	3000	19800	
59.92	23	3000	19800	
53.21	26	3000	19800	
47.58	29	3000	19800	AD_4
42.78	33	3000	19800	
37.13	38	3000	18600	
33.25	42	2890	17900	
27.58	51	2670	16900	
2-st.				
32.05	44	2560	10600	AD_4
27.19	51	2560	8380	
25.03	56	2830	15900	AD_5
22.37	63	2720	15300	
20.14	70	2610	14800	
18.24	77	2500	14400	
16.17	87	2400	13800	
14.62	96	2300	13400	
12.39	113	2190	12700	
10.83	129	2090	12100	
9.29	151	2030	12200	
8.39	167	2030	11700	
7.12	197	2000	10900	
6.21	225	1890	10500	
5.20	269	1780	9850	AD_6
4.50	311	1630	9500	

MDR107-147 n_e=1400 1/min

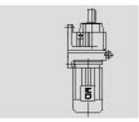

MDR107 — 4300Nm

i	n_a [1/min]	M_{amax} [Nm]	F_{Ra} [N]	AD
3-st.				
251.15	5.6	4300	29500	AD3
229.95	6.1	4300	29500	
203.16	6.9	4300	29500	
172.34	8.1	4300	29500	
158.68	8.8	4300	29500	
141.83	9.9	4300	29500	
127.68	10	4300	29500	
115.63	12	4300	29500	
102.53	14	4300	29500	
92.70	15	4300	29500	
78.57	18	4300	29500	
72.88	19	4300	29500	
65.60	21	4300	29200	AD4
59.41	24	4300	28000	
52.68	27	4300	26600	
47.63	29	4300	25500	
40.37	35	4300	23800	
35.26	40	4300	22400	
29.49	47	4300	20700	
2-st.				
30.77	45	4300	21100	AD4
27.58	51	4300	20100	
24.90	56	4300	19200	
22.62	62	4300	18300	
20.07	70	4300	17300	
18.21	77	4300	16600	
15.65	89	4300	15400	
13.66	102	4300	14400	AD6
11.59	121	4300	13300	
10.13	138	4300	12400	
8.56	164	4300	11300	
7.86	178	2970	13800	
6.66	210	2970	12800	
5.82	241	2970	12100	
4.92	285	2900	11300	

MDR137 — 8000Nm

i	n_a [1/min]	M_{amax} [Nm]	F_{Ra} [N]	AD
3-st.				
222.60	6.3	8000	53400	AD4
188.45	7.4	8000	53400	
174.40	8.0	8000	53400	
156.31	9.0	8000	53400	
141.12	9.9	8000	53400	
128.18	11	8000	53400	
113.72	12	8000	53400	
103.20	14	8000	53400	
88.70	16	8000	53400	
80.91	17	8000	53400	
73.49	19	8000	53400	
65.20	21	8000	53400	
59.17	24	8000	53400	
50.86	28	8000	53400	AD5
44.39	32	8000	53400	
37.65	37	8000	53400	
32.91	43	8000	53400	
27.83	50	7680	54100	
2-st.				
29.57	47	7780	53900	AD6
24.12	58	8000	49400	
22.00	64	8000	47100	AD7
19.04	74	8000	43500	
16.80	83	8000	40600	
14.51	96	8000	37300	
12.83	109	8000	34700	
10.79	130	8000	31100	
8.71	161	7840	27600	
7.59	184	5110	39000	
6.38	219	5110	35900	
5.15	272	4600	34500	

MDR147 — 13000Nm

i	n_a [1/min]	M_{amax} [Nm]	F_{Ra} [N]	AD
3-st.				
163.31	8.6	13000	62700	AD4
146.91	9.5	13000	62700	
119.86	12	13000	62700	
109.31	13	13000	62700	
94.60	15	13000	62700	
83.47	17	13000	62700	
72.09	19	13000	62700	AD5
66.99	21	13000	62700	
61.09	23	13000	62700	
52.87	26	13000	62700	
46.65	30	13000	62700	
40.29	35	13000	62700	AD6
35.64	39	13000	62700	AD7
29.95	47	13000	62700	
24.19	58	11900	64700	
2-st.				
20.44	68	12000	64600	AD8
18.04	78	10500	67000	
15.64	90	13000	62700	
13.91	101	12600	63400	
11.99	117	13000	60400	
9.74	144	13000	54400	
8.26	169	13000	49900	
7.25	193	8670	58400	
5.89	238	8670	53200	
5.00	280	8670	49300	

MDR167-187 n_e=1400 1/min

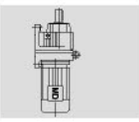

MDR167 — 18000Nm

i	n_a [1/min]	M_{amax} [Nm]	F_{Ra} [N]	AD
3-st.				
229.71	6.1	18000	120000	AD_5
186.93	7.5	18000	120000	
153.07	9.1	18000	120000	
139.98	10	18000	120000	
121.81	11	18000	120000	
107.49	13	18000	120000	
93.19	15	18000	120000	
82.91	17	18000	120000	
73.70	19	18000	120000	
67.40	21	18000	120000	AD_6
58.65	24	18000	120000	
51.76	27	18000	120000	
44.87	31	18000	120000	AD_7
39.92	35	18000	120000	
34.41	41	18000	120000	
27.96	50	18000	120000	AD_8
23.71	59	18000	116500	
2-st.				
46.00	30	7000	120000	AD_5
37.74	37	9000	120000	AD_6
30.71	46	10000	120000	
24.57	57	14000	120000	AD_6
21.85	64	13000	120000	
19.03	74	16000	111400	
16.98	82	15000	108900	
14.48	97	18000	93800	
11.99	117	17000	88700	
10.24	137	17000	82500	

MDR177 — 32000 Nm

i	n_a [1/min]	M_{amax} [Nm]	F_{Ra} [N]	AD
3-st.				
182.73	7.66	32000	150000	AD5
149.94	9.34	32000	150000	
122.00	11.48	32000	150000	AD6
97.60	14.34	32000	147200	
86.80	16.13	32000	140100	AD7
75.62	18.51	32000	132000	
67.47	20.75	32000	125600	
57.51	24.35	32000	117000	AD8
47.65	29.38	32000	107400	
40.67	34.42	32000	99700	
32.30	43.34	32000	93700	
28.82	48.58	32000	88600	
24.56	57.00	32000	81700	
20.35	68.80	32000	74000	
17.37	80.60	32000	67900	
2-st.				
36.12	38.76	15000	145000	
29.64	47.23	18000	132000	
24.12	58.05	20000	120000	
19.29	72.57	31000	91000	
17.16	81.60	27000	92000	
14.95	93.66	32000	78000	
13.34	104.97	31000	77000	
11.37	123.16	32000	68000	
9.60	145.83	31000	64000	
8.19	170.94	29000	62000	

MDR187 — 50000 Nm

i	n_a [1/min]	M_{amax} [Nm]	F_{Ra} [N]	AD
3-st.				
160.87	8.70	50000	190000	AD6
147.76	9.47	50000	190000	
129.32	10.83	50000	190000	AD7
115.99	12.07	50000	188200	
100.71	13.90	50000	177200	
91.38	15.32	50000	169000	AD8
78.71	17.79	50000	159000	
66.15	21.16	50000	147000	
57.28	24.44	50000	137500	
47.73	29.33	50000	126100	
44.75	31.28	50000	116600	
40.61	34.48	50000	112700	
34.98	40.03	50000	107200	
29.40	47.62	50000	99100	
25.45	55.01	47600	90200	
21.21	66.01	43900	86800	
18.08	77.42	41400	84000	
2-st.				
20.19	69.33	45000	177200	
18.32	76.41	42000	169900	
15.78	88.70	50000	159000	
13.26	105.55	48000	147000	
11.48	121.90	48000	137500	
9.57	146.28	45000	126100	
8.16	171.57	45000	116000	

MDR27/37R17, MDR47R37 n_e=1400 1/min

MDR27R17 130Nm

i	n_a [1/min]	Stopień *Stage* R27	R17	M_{amax} [Nm]	F_{Ra} [N]
8612	0.16	3	3	130	4230
7425	0.19	3	3	130	4230
6921	0.20	3	3	130	4230
6050	0.23	3	3	130	4230
5217	0.27	3	3	130	4230
4661	0.30	3	3	130	4230
4073	0.34	3	3	130	4230
3516	0.40	3	3	130	4230
3160	0.44	3	3	130	4230
2763	0.51	3	3	130	4230
2414	0.58	3	3	130	4230
2110	0.66	3	3	130	4230
1862	0.75	3	3	130	4230
1822	0.77	2	3	130	4230
1625	0.86	3	3	130	4230
1580	0.89	2	3	130	4230
1464	0.96	2	3	130	4230
1434	0.98	3	3	130	4230
1270	1.1	2	3	130	4230
1254	1.1	3	3	130	4230
1101	1.3	3	2	130	4230
1100	1.3	2	3	130	4230
972	1.4	2	3	130	4230
962	1.5	3	2	130	4230
848	1.7	3	2	130	4230
840	1.7	2	3	130	4230
743	1.9	3	2	130	4230
741	1.9	2	3	130	4230
654	2.1	2	3	130	4230
649	2.2	3	2	130	4230
567	2.5	3	2	130	4230
566	2.5	2	3	130	4230
509	2.8	3	2	130	4230
499	2.8	2	3	130	4230
440	3.2	2	2	130	4230
432	3.2	3	2	130	4230
387	3.6	3	2	130	4230
381	3.7	2	2	130	4230
339	4.1	3	2	130	4230
329	4.3	2	2	130	4230
296	4.7	3	2	130	4230
290	4.8	2	2	130	4230
259	5.4	3	2	130	4230
256	5.5	2	2	130	4230
229	6.1	3	2	130	4230
227	6.2	2	2	130	4230
203	6.9	2	2	130	4230
200	7.0	3	2	130	4230
179	7.8	2	2	130	4230
177	7.9	3	2	130	4230
166	8.4	3	2	130	4230
156	9.0	2	2	130	4230
150	9.3	3	2	130	4230
141	9.9	3	2	130	4230
135	10	2	2	130	4230
124	11	3	2	130	4230
118	12	2	2	130	4230
110	13	3	2	130	4230
104	13	2	2	130	4230
94	15	3	2	130	4230
90	16	2	2	130	4230

MDR37R17 200Nm

i	n_a [1/min]	Stopień *Stage* R37	R17	M_{amax} [Nm]	F_{Ra} [N]
8595	0.16	3	3	200	4950
7411	0.19	3	3	200	4950
6907	0.20	3	3	200	4950
6038	0.23	3	3	200	4950
5206	0.27	3	3	200	4950
4654	0.30	3	3	200	4950
4065	0.34	3	3	200	4950
3658	0.38	3	3	200	4950
3154	0.44	3	3	200	4950
2757	0.51	3	3	200	4950
2409	0.58	3	3	200	4950
2106	0.66	3	3	200	4950
1856	0.75	3	3	200	4950
1818	0.77	2	3	200	4950
1622	0.86	3	3	200	4950
1576	0.89	2	3	200	4950
1431	0.98	3	3	200	4950
1359	1.0	2	3	200	4950
1267	1.1	2	3	200	4950
1251	1.1	3	3	200	4950
1099	1.3	3	2	200	4950
1098	1.3	2	3	200	4950
970	1.4	2	3	200	4950
960	1.5	3	2	200	4950
847	1.7	3	2	200	4950
839	1.7	2	3	200	4950
741	1.9	3	2	200	4950
740	1.9	2	3	200	4950
653	2.1	2	3	200	4950
647	2.2	3	2	200	4950
577	2.4	2	3	200	4950
566	2.5	3	2	200	4950
508	2.8	3	2	200	4950
498	2.8	2	3	200	4950
439	3.2	2	2	200	4950
431	3.2	3	2	200	4950
387	3.6	3	2	200	4950
378	3.7	2	2	200	4950
338	4.1	3	2	200	4950
328	4.3	2	2	200	4950
296	4.7	3	2	200	4950
289	4.8	2	2	200	4950
265	5.3	2	2	200	4950
259	5.4	3	2	200	4950
228	6.1	3	2	200	4950
226	6.2	2	2	200	4950
202	6.9	2	2	200	4950
199	7.0	3	2	200	4950
179	7.8	2	2	200	4950
172	8.1	3	3	200	4950
156	9.0	2	2	200	4950
150	9.3	3	3	200	4950
135	10	2	3	200	4950
130	11	3	2	200	4950
127	11	2	3	200	4950
124	11	3	2	200	4950
110	13	3	2	200	4950
104	13	2	3	200	4950
94	15	3	2	200	4950
90	16	2	2	200	4950

MDR47R37 300Nm

i	n_a [1/min]	Stopień *Stage* R47	R37	M_{amax} [Nm]	F_{Ra} [N]
13598	0.10	3	3	300	5420
12472	0.11	3	3	300	5420
10619	0.13	3	3	300	5420
9155	0.15	3	3	300	5420
8534	0.16	3	3	300	5420
7460	0.19	3	3	300	5420
6993	0.20	3	3	300	5420
6171	0.23	3	3	300	5420
5624	0.25	3	3	300	5420
4849	0.29	3	3	300	5420
4520	0.31	3	3	300	5420
3951	0.35	3	3	300	5420
3704	0.38	3	3	300	5420
3268	0.43	3	3	300	5420
2898	0.48	3	3	300	5420
2856	0.49	3	2	300	5420
2625	0.53	3	2	300	5420
2598	0.54	2	3	300	5420
2463	0.57	3	3	300	5420
2383	0.59	2	3	300	5420
2246	0.62	3	2	300	5420
2029	0.69	2	3	300	5420
1948	0.72	3	2	300	5420
1821	0.77	3	2	300	5420
1749	0.80	2	3	300	5420
1630	0.86	2	3	300	5420
1573	0.89	2	2	300	5420
1425	0.98	3	3	300	5420
1336	1.0	2	3	300	5420
1193	1.2	3	2	300	5420
1179	1.2	2	3	300	5420
1074	1.3	2	3	300	5420
1020	1.4	3	2	300	5420
955	1.5	3	2	300	5420
927	1.5	2	3	300	5420
863	1.6	2	3	300	5420
804	1.7	3	2	300	5420
755	1.9	2	3	300	5420
708	2.0	2	3	300	5420
673	2.1	3	2	300	5420
624	2.2	2	3	300	5420
572	2.4	3	2	300	5420
554	2.5	2	3	300	5420
546	2.6	2	2	300	5420
510	2.7	3	2	300	5420
502	2.8	2	2	300	5420
471	3.0	2	3	300	5420
436	3.2	3	2	300	5420
429	3.3	2	2	300	5420
408	3.4	3	2	300	5420
372	3.8	2	2	300	5420
348	4.0	2	2	300	5420
344	4.1	3	2	300	5420
301	4.7	2	2	300	5420
255	5.5	2	2	300	5420
228	6.1	2	2	300	5420
195	7.2	2	2	300	5420
182	7.7	2	2	300	5420
154	9.1	2	2	300	5420
129	11	2	2	300	5420
109	13	2	2	300	5420
98	14	2	2	300	5420

MDR57/67/77R37 n_e=1400 1/min

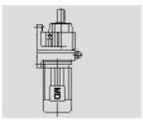

MDR27R17 — 450Nm

i	n_a [1/min]	Stopień *Stage* R57	R37	M_{amax} [Nm]	F_{Ra} [N]
14369	0.10	3	3	450	7110
12095	0.12	3	3	450	7110
10860	0.13	3	3	450	7110
9445	0.15	3	3	450	7110
8480	0.17	3	3	450	7110
7312	0.19	3	3	450	7110
6521	0.21	3	3	450	7110
5585	0.25	3	3	450	7110
4928	0.28	3	3	450	7110
4378	0.32	3	3	450	7110
3873	0.36	3	3	450	7110
3344	0.42	3	3	450	7110
2957	0.47	2	3	450	7110
2907	0.48	3	3	450	7110
2567	0.55	3	3	450	7110
2508	0.56	2	3	450	7110
2309	0.61	2	3	450	7110
2244	0.62	3	3	450	7110
1991	0.70	2	3	450	7110
1967	0.71	3	3	450	7110
1768	0.79	2	3	450	7110
1732	0.81	3	2	450	7110
1555	0.90	3	2	450	7110
1520	0.92	2	3	450	7110
1399	1.0	3	2	450	7110
1342	1.0	2	3	450	7110
1189	1.2	3	2	450	7110
1164	1.2	2	3	450	7110
1034	1.4	3	2	450	7110
1027	1.4	2	3	450	7110
894	1.6	2	3	450	7110
805	1.7	2	3	450	7110
782	1.8	3	2	450	7110
683	2.0	2	3	450	7110
678	2.1	3	2	450	7110
604	2.3	3	2	450	7110
603	2.3	2	3	450	7110
537	2.6	3	2	450	7110
534	2.6	2	3	450	7110
471	3.0	3	2	450	7110
454	3.1	2	3	450	7110
410	3.4	2	3	450	7110
359	3.9	2	2	450	7110
357	3.9	3	2	450	7110
324	4.3	2	2	450	7110
319	4.4	3	2	450	7110
290	4.8	2	2	450	7110
273	5.1	3	2	450	7110
262	5.3	2	2	450	7110
246	5.7	2	2	450	7110
241	5.8	3	2	450	7110
220	6.4	2	2	450	7110
215	6.5	3	2	450	7110
188	7.4	2	2	450	7110
187	7.5	3	2	450	7110
164	8.5	3	2	450	7110
159	8.8	2	2	450	7110
146	9.6	2	2	450	7110
142	9.9	3	2	450	7110
134	10	2	2	450	7110

MDR67R37 — 600Nm

i	n_a [1/min]	Stopień *Stage* R67	R37	M_{amax} [Nm]	F_{Ra} [N]
15361	0.09	3	3	600	7560
12931	0.11	3	3	600	7560
11996	0.12	3	3	600	7560
10097	0.14	3	3	600	7560
9066	0.15	3	3	600	7560
7816	0.18	3	3	600	7560
6732	0.21	3	3	600	7560
5970	0.23	3	3	600	7560
5268	0.27	3	3	600	7560
4680	0.30	3	3	600	7560
4136	0.34	3	3	600	7560
3566	0.39	3	3	600	7560
3125	0.45	3	3	600	7560
2745	0.51	3	3	600	7560
2682	0.52	2	3	600	7560
2460	0.57	2	3	600	7560
2403	0.58	3	3	600	7560
2136	0.66	3	2	600	7560
2094	0.67	2	3	600	7560
1852	0.76	3	2	600	7560
1805	0.78	2	3	600	7560
1652	0.85	3	2	600	7560
1629	0.86	2	3	600	7560
1471	0.95	2	3	600	7560
1432	0.98	3	2	600	7560
1379	1.0	2	3	600	7560
1259	1.1	3	2	600	7560
1109	1.3	2	3	600	7560
1106	1.3	3	2	600	7560
956	1.5	2	3	600	7560
891	1.6	2	3	600	7560
836	1.7	3	2	600	7560
750	1.9	3	2	600	7560
730	1.9	2	3	600	7560
646	2.2	3	2	600	7560
644	2.2	2	3	600	7560
574	2.4	3	2	600	7560
571	2.5	2	3	600	7560
495	2.8	3	2	600	7560
486	2.9	2	3	600	7560
443	3.2	2	2	600	7560
438	3.2	3	2	600	7560
388	3.6	3	2	600	7560
384	3.6	2	2	600	7560
359	3.9	2	2	600	7560
344	4.1	3	2	600	7560
310	4.5	2	2	600	7560
294	4.8	3	2	600	7560
264	5.3	2	2	600	7560
261	5.4	3	2	600	7560
235	6.0	2	2	600	7560
234	6.0	3	2	600	7560
201	7.0	2	2	600	7560
200	7.0	3	2	600	7560
181	7.7	2	2	600	7560
181	7.7	2	2	600	7560
176	8.0	3	2	600	7560
159	8.8	2	2	600	7560
158	8.9	3	2	600	7560

MDR77R37 — 820Nm

i	n_a [1/min]	Stopień *Stage* R77	R37	M_{amax} [Nm]	F_{Ra} [N]
16370	0.09	3	3	820	9920
15015	0.09	3	3	820	9920
13885	0.10	3	3	820	9920
12783	0.11	3	3	820	9920
11021	0.13	3	3	820	9920
9788	0.14	3	3	820	9920
8714	0.16	3	3	820	9920
7617	0.18	3	3	820	9920
6770	0.21	3	3	820	9920
5838	0.24	3	3	820	9920
5184	0.27	3	3	820	9920
4470	0.31	3	3	820	9920
3999	0.35	3	3	820	9920
3488	0.40	3	3	820	9920
3151	0.44	2	3	820	9920
3053	0.46	3	3	820	9920
2890	0.48	2	3	820	9920
2671	0.52	3	3	820	9920
2460	0.57	2	3	820	9920
2345	0.60	3	2	820	9920
2121	0.66	2	3	820	9920
2070	0.68	3	2	820	9920
1977	0.71	2	3	820	9920
1822	0.77	3	2	820	9920
1728	0.81	2	3	820	9920
1620	0.86	2	3	820	9920
1580	0.89	3	2	820	9920
1430	0.98	2	3	820	9920
1394	1.0	3	2	820	9920
1303	1.1	2	3	820	9920
1218	1.1	3	2	820	9920
1124	1.2	2	3	820	9920
1084	1.3	3	2	820	9920
1047	1.3	2	3	820	9920
940	1.5	3	2	820	9920
915	1.5	2	3	820	9920
858	1.6	2	3	820	9920
821	1.7	3	2	820	9920
757	1.8	2	3	820	9920
731	1.9	3	2	820	9920
671	2.1	2	3	820	9920
646	2.2	3	2	820	9920
571	2.5	2	3	820	9920
560	2.5	3	2	820	9920
520	2.7	2	2	820	9920
488	2.9	3	2	820	9920
451	3.1	2	2	820	9920
436	3.2	3	2	820	9920
422	3.3	2	2	820	9920
373	3.8	3	2	820	9920
365	3.8	2	2	820	9920
327	4.3	3	2	820	9920
310	4.5	2	2	820	9920
289	4.8	3	2	820	9920
276	5.1	2	2	820	9920
260	5.4	3	2	820	9920
236	5.9	2	2	820	9920
224	6.2	3	2	820	9920
221	6.3	2	2	820	9920
197	7.1	3	2	820	9920
186	7.5	2	2	820	9920
169	8.3	3	2	820	9920
149	9.4	3	2	820	9920

MDR87/97R57, MDR107R77 n_e=1400 1/min

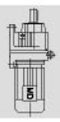

MDR87R57				1550Nm	
i	n_a [1/min]	Stopień *Stage* R87	R57	M_{amax} [Nm]	F_{Ra} [N]
17452	0.08	3	3	1550	16900
15310	0.09	3	3	1550	16900
13813	0.10	3	3	1550	16900
12025	0.12	3	3	1550	16900
10549	0.13	3	3	1550	16900
9244	0.15	3	3	1550	16900
8109	0.17	3	3	1550	16900
7038	0.20	3	3	1550	16900
6174	0.23	3	3	1550	16900
5449	0.26	3	3	1550	16900
4831	0.29	3	3	1550	16900
4206	0.33	3	3	1550	16900
4020	0.35	2	3	1550	16900
3744	0.37	3	3	1550	16900
3703	0.38	2	3	1550	16900
3233	0.43	3	3	1550	16900
3182	0.44	2	3	1550	16900
2873	0.49	3	3	1550	16900
2770	0.51	2	3	1550	16900
2595	0.54	2	3	1550	16900
2518	0.56	3	3	1550	16900
2209	0.63	3	3	1550	16900
2129	0.66	2	3	1550	16900
1961	0.71	3	3	1550	16900
1930	0.73	2	3	1550	16900
1737	0.81	3	2	1550	16900
1733	0.81	2	3	1550	16900
1524	0.92	3	2	1550	16900
1489	0.94	2	3	1550	16900
1395	1.0	2	3	1550	16900
1303	1.1	3	2	1550	16900
1232	1.1	2	3	1550	16900
1145	1.2	2	3	1550	16900
1143	1.2	3	2	1550	16900
1037	1.4	2	3	1550	16900
1008	1.4	3	2	1550	16900
994	1.4	3	3	1550	16900
931	1.5	2	2	1550	16900
885	1.6	3	2	1550	16900
881	1.6	3	3	1550	16900
802	1.7	2	3	1550	16900
776	1.8	3	2	1550	16900
754	1.9	2	3	1550	16900
685	2.0	3	2	1550	16900
649	2.2	2	3	1550	16900
599	2.3	3	2	1550	16900
580	2.4	2	3	1550	16900
538	2.6	2	2	1550	16900
525	2.7	3	2	1550	16900
472	3.0	2	2	1550	16900
456	3.1	3	2	1550	16900
400	3.5	2	2	1550	16900
398	3.5	3	2	1550	16900
361	3.9	2	2	1550	16900
352	4.0	3	2	1550	16900
305	4.6	3	2	1550	16900
300	4.7	2	2	1550	16900
268	5.2	3	2	1550	16900
256	5.5	2	2	1550	16900
236	5.9	3	2	1550	16900
232	6.0	2	2	1550	16900
232	6.0	2	2	1550	16900
209	6.7	3	2	1550	16900
195	7.2	2	2	1550	16900

MDR97R57				3000Nm	
i	n_a [1/min]	Stopień *Stage* R97	R57	M_{amax} [Nm]	F_{Ra} [N]
21769	0.06	3	3	3000	19800
19332	0.07	3	3	3000	19800
17230	0.08	3	3	3000	19800
14999	0.09	3	3	3000	19800
13320	0.11	3	3	3000	19800
11156	0.13	3	3	3000	19800
10030	0.14	3	3	3000	19800
8706	0.16	3	3	3000	19800
7692	0.18	3	3	3000	19800
6708	0.21	3	3	3000	19800
5931	0.24	3	3	3000	19800
5161	0.27	3	3	3000	19800
4678	0.30	2	3	3000	19800
4559	0.31	3	3	3000	19800
4309	0.32	2	3	3000	19800
4004	0.35	3	3	3000	19800
3702	0.38	2	3	3000	19800
3481	0.40	3	3	3000	19800
3065	0.46	3	2	3000	19800
3019	0.46	2	3	3000	19800
2722	0.51	3	2	3000	19800
2668	0.52	2	3	3000	19800
2311	0.61	3	2	3000	19800
2245	0.62	2	3	3000	19800
2078	0.67	3	2	3000	19800
2016	0.69	2	3	3000	19800
1823	0.77	3	2	3000	19800
1733	0.81	2	3	3000	19800
1623	0.86	2	3	3000	19800
1583	0.88	3	2	3000	19800
1434	0.98	2	3	3000	19800
1396	1.0	3	2	3000	19800
1228	1.1	3	2	3000	19800
1207	1.2	2	3	3000	19800
1084	1.3	2	3	3000	19800
1069	1.3	3	2	3000	19800
938	1.5	3	2	3000	19800
934	1.5	2	3	3000	19800
878	1.6	2	3	3000	19800
824	1.7	3	2	3000	19800
755	1.9	2	3	3000	19800
737	1.9	3	2	3000	19800
632	2.2	3	2	3000	19800
625	2.2	2	2	3000	19800
560	2.5	3	2	3000	19800
549	2.6	2	2	3000	19800
484	2.9	3	2	3000	19800
466	3.0	2	2	3000	19800
431	3.2	3	2	3000	19800
420	3.3	2	2	3000	19800
379	3.7	3	2	3000	19800
370	3.8	2	2	3000	19800
349	4.0	2	2	3000	19800
336	4.2	3	2	3000	19800
297	4.7	2	2	3000	19800
296	4.7	3	2	3000	19800
270	5.2	2	2	3000	19800
249	5.6	3	2	3000	19800
234	6.0	3	2	3000	19800
227	6.2	2	2	3000	19800
209	6.7	3	2	3000	19800
249	5.6	2	2	3000	19800

MDR107R77				4300Nm	
i	n_a [1/min]	Stopień *Stage* R107	R77	M_{amax} [Nm]	F_{Ra} [N]
20018	0.07	3	3	4300	29500
17080	0.08	3	3	4300	29500
14936	0.09	3	3	4300	29500
12829	0.11	3	3	4300	29500
11256	0.12	3	3	4300	29500
9547	0.15	3	3	4300	29500
8618	0.16	3	3	4300	29500
7583	0.18	3	3	4300	29500
6743	0.21	3	3	4300	29500
5914	0.24	3	3	4300	29500
5168	0.27	3	3	4300	29500
4435	0.32	3	3	4300	29500
3918	0.36	2	3	4300	29500
3896	0.36	3	3	4300	29500
3432	0.41	3	3	4300	29500
3343	0.42	2	3	4300	29500
3039	0.46	3	3	4300	29500
3034	0.46	2	3	4300	29500
2688	0.52	3	3	4300	29500
2653	0.53	2	3	4300	29500
2339	0.60	3	3	4300	29500
2280	0.61	2	3	4300	29500
2067	0.68	2	3	4300	29500
1987	0.70	3	2	4300	29500
1827	0.77	3	2	4300	29500
1693	0.83	2	3	4300	29500
1599	0.88	3	2	4300	29500
1550	0.90	2	3	4300	29500
1407	1.0	2	3	4300	29500
1400	1.0	3	2	4300	29500
1226	1.1	3	2	4300	29500
1209	1.2	2	3	4300	29500
1104	1.3	3	2	4300	29500
1055	1.3	2	3	4300	29500
939	1.5	3	2	4300	29500
919	1.5	2	3	4300	29500
822	1.7	3	2	4300	29500
815	1.7	2	3	4300	29500
717	2.0	2	3	4300	29500
626	2.2	2	3	4300	29500
614	2.3	3	2	4300	29500
544	2.6	3	2	4300	29500
528	2.7	2	3	4300	29500
492	2.8	3	2	4300	29500
469	3.0	2	2	4300	29500
426	3.3	2	2	4300	29500
417	3.4	3	2	4300	29500
377	3.7	2	2	4300	29500
369	3.8	3	2	4300	29500
325	4.3	2	2	4300	29500
323	4.3	3	2	4300	29500
285	4.9	3	2	4300	29500
284	4.9	2	2	4300	29500
256	5.5	2	2	4300	29500
253	5.5	3	2	4300	29500
220	6.4	2	2	4300	29500
214	6.5	3	2	4300	29500
193	7.3	2	2	4300	29500
187	7.5	3	2	4300	29500
172	8.1	2	2	4300	29500

MDR 137/147R77, MDR147R87 n_e=1400 1/min

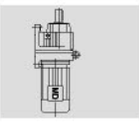

MDR137R77 — 8000Nm

i	n_a [1/min]	Stopień *Stage* R137	R77	M_{amax} [Nm]	F_{Ra} [N]
22203	0.06	3	3	8000	53400
18945	0.07	3	3	8000	53400
16566	0.08	3	3	8000	53400
14777	0.09	3	3	8000	53400
12921	0.11	3	3	8000	53400
11712	0.12	3	3	8000	53400
10573	0.13	3	3	8000	53400
8784	0.16	3	3	8000	53400
7479	0.19	3	3	8000	53400
6559	0.21	3	3	8000	53400
5834	0.24	3	3	8000	53400
5116	0.27	3	3	8000	53400
4709	0.30	2	3	8000	53400
4464	0.31	3	3	8000	53400
4018	0.35	2	3	8000	53400
3928	0.36	3	3	8000	53400
3514	0.40	2	3	8000	53400
3454	0.41	3	3	8000	53400
3338	0.42	2	3	8000	53400
2993	0.47	3	3	8000	53400
2929	0.48	2	3	8000	53400
2658	0.53	3	2	8000	53400
2484	0.56	2	3	8000	53400
2412	0.58	3	2	8000	53400
2242	0.62	2	3	8000	53400
2073	0.68	3	2	8000	53400
1863	0.75	2	3	8000	53400
1839	0.76	3	2	8000	53400
1598	0.88	3	2	8000	53400
1586	0.88	2	3	8000	53400
1397	1.0	3	2	8000	53400
1391	1.0	2	3	8000	53400
1256	1.1	2	3	8000	53400
1226	1.1	3	2	8000	53400
1105	1.3	2	3	8000	53400
1090	1.3	3	2	8000	53400
1043	1.3	2	3	8000	53400
951	1.5	3	2	8000	53400
888	1.6	2	3	8000	53400
831	1.7	3	2	8000	53400
730	1.9	3	2	8000	53400
699	2.0	2	3	8000	53400
629	2.2	3	2	8000	53400
609	2.3	2	3	8000	53400
564	2.5	2	2	8000	53400
560	2.5	3	2	8000	53400
517	2.7	2	2	8000	53400
490	2.9	3	2	8000	53400
453	3.1	2	2	8000	53400
428	3.3	3	2	8000	53400
381	3.7	3	2	8000	53400
376	3.7	2	2	8000	53400
339	4.1	2	2	8000	53400
323	4.3	3	2	8000	53400
297	4.7	2	2	8000	53400
291	4.8	3	2	8000	53400
255	5.5	3	2	8000	53400
223	6.3	3	2	8000	53400
197	7.1	3	2	8000	53400
175	8.0	3	2	8000	53400

MDR147R77 — 13000Nm

i	n_a [1/min]	Stopień *Stage* R147	R77	M_{amax} [Nm]	F_{Ra} [N]
23401	0.06	3	3	13000	62700
21342	0.07	3	3	13000	62700
18210	0.08	3	3	13000	62700
15923	0.09	3	3	13000	62700
14075	0.10	3	3	13000	62700
12344	0.11	3	3	13000	62700
11143	0.13	3	3	13000	62700
9743	0.14	3	3	13000	62700
8443	0.17	3	3	13000	62700
7307	0.19	3	3	13000	62700
6447	0.22	3	3	13000	62700
5568	0.25	3	3	13000	62700
4926	0.28	3	3	13000	62700
4325	0.32	3	3	13000	62700
3754	0.37	3	3	13000	62700
3302	0.42	3	3	13000	62700
2898	0.48	3	3	13000	62700
2555	0.55	3	2	13000	62700
2211	0.63	3	2	13000	62700
1951	0.72	3	2	13000	62700
1705	0.82	3	2	13000	62700
1536	0.91	3	2	13000	62700
1329	1.1	3	2	13000	62700
1166	1.2	3	2	13000	62700
1029	1.4	3	2	13000	62700
889	1.6	3	2	13000	62700
784	1.8	3	2	13000	62700
695	2.0	3	2	13000	62700
619	2.3	3	2	13000	62700
558	2.5	3	2	13000	62700
489	2.9	3	2	13000	62700
415	3.4	3	2	13000	62700

MDR147R87 — 13000Nm

i	n_a [1/min]	Stopień *Stage* R147	R87	M_{amax} [Nm]	F_{Ra} [N]
533	2.6	3	2	13000	62700
462	3.0	3	2	13000	62700
426	3.3	3	2	13000	62700
368	3.8	3	2	13000	62700
326	4.3	3	2	13000	62700
280	5.0	3	2	13000	62700
247	5.7	3	2	13000	62700
214	6.5	3	2	13000	62700
189	7.4	3	2	13000	62700
159	8.8	3	2	13000	62700

MDR167R97, MDR167R107, MDR177R97 n_e=1400 1/min

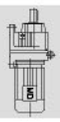

MDR167R97 18000Nm

i	n_a [1/min]	Stopień *Stage* R167	R97	M_{amax} [Nm]	F_{Ra} [N]
27001	0.05	3	3	18000	120000
22482	0.06	3	3	18000	120000
20002	0.07	3	3	18000	120000
17361	0.08	3	3	18000	120000
15446	0.09	3	3	18000	120000
14051	0.10	3	3	18000	120000
11812	0.12	3	3	18000	120000
10509	0.13	3	3	18000	120000
9631	0.15	3	3	18000	120000
7749	0.18	3	3	18000	120000
6894	0.20	3	3	18000	120000
6077	0.23	3	3	18000	120000
5407	0.26	3	3	18000	120000
4650	0.30	3	3	18000	120000
4129	0.34	3	3	18000	120000
3692	0.38	3	3	18000	120000
3099	0.45	3	3	18000	120000
2657	0.53	3	2	18000	120000
2333	0.60	3	2	18000	120000
2085	0.67	3	2	18000	120000
1877	0.75	3	2	18000	120000
1670	0.84	3	2	18000	120000
1438	0.97	3	2	18000	120000
1279	1.1	3	2	18000	120000
1123	1.2	3	2	18000	120000
999	1.4	3	2	18000	120000
861	1.6	3	2	18000	120000
760	1.8	3	2	18000	120000
656	2.1	3	2	18000	120000
579	2.4	3	2	18000	120000
503	2.8	3	2	18000	120000
432	3.2	3	2	18000	120000
376	3.7	3	2	18000	120000
335	4.2	3	2	18000	120000
303	4.6	3	2	18000	120000
279	5.0	3	2	18000	120000

MDR167R107 18000Nm

i	n_a [1/min]	Stopień *Stage* R167	R107	M_{amax} [Nm]	F_{Ra} [N]
3637	0.38	2	3	18000	120000
3330	0.42	2	3	18000	120000
2757	0.51	2	3	18000	120000
2436	0.57	2	3	18000	120000
2298	0.61	2	3	18000	120000
2066	0.68	2	3	18000	120000
1849	0.76	2	3	18000	120000
1674	0.84	2	3	18000	120000
1485	0.94	2	3	18000	120000
1342	1.0	2	3	18000	120000
1229	1.1	2	3	18000	120000
1111	1.3	2	3	18000	120000
950	1.5	2	3	18000	120000
860	1.6	2	3	18000	120000
763	1.8	2	3	18000	120000
690	2.0	2	3	18000	120000
585	2.4	2	3	18000	120000
511	2.7	2	3	18000	120000
446	3.1	2	2	18000	120000
399	3.5	2	2	18000	120000
361	3.9	2	2	18000	120000
349	4.0	3	2	18000	120000
328	4.3	2	2	18000	120000
295	4.7	3	2	18000	120000
291	4.8	2	2	18000	120000
270	5.2	3	2	18000	120000
264	5.3	2	2	18000	120000
229	6.1	3	2	18000	120000
227	6.2	2	2	18000	120000
200	7.0	3	2	18000	120000
198	7.1	2	2	18000	120000
169	8.3	3	2	18000	120000
168	8.3	2	2	18000	120000

MDR177R97 32000Nm

i	n_a [1/min]	Stopień *Stage* R177	R97	M_{amax} [Nm]	F_{Ra} [N]
21910	0.06	3	3	32000	150000
19337	0.07	3	3	32000	150000
16663	0.08	3	3	32000	150000
14706	0.10	3	3	32000	150000
12857	0.11	3	3	32000	150000
11402	0.12	3	3	32000	150000
9585	0.15	3	3	32000	150000
7289	0.19	3	3	32000	150000
5949	0.24	3	3	32000	150000
5319	0.26	3	3	32000	150000
4531	0.31	3	3	32000	150000
3750	0.37	3	3	32000	150000
3060	0.46	3	3	32000	150000
2514	0.56	3	3	32000	150000
2056	0.68	3	2	32000	150000
1893	0.74	3	2	32000	150000
1564	0.90	3	2	32000	150000
1439	0.97	3	2	32000	150000
1223	1.14	3	2	32000	150000
1049	1.33	3	2	32000	150000
937	1.49	3	2	32000	150000
841	1.67	3	2	32000	150000
703	1.99	3	2	32000	150000
623	2.25	3	2	32000	150000
534	2.62	3	2	32000	150000
470	2.98	3	2	32000	150000
409	3.42	3	2	32000	150000

MDR177R107, MDR187R97, MDR187R107 n_e=1400 1/min

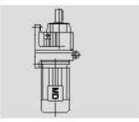

MDR177R107 — 32000 Nm

i	n_a [1/min]	Stopień *Stage* R177	R107	M_{amax} [Nm]	F_{Ra} [N]
368	3.81	2	2	32000	150000
350	4.00	2	2	32000	150000
314	4.46	2	2	32000	150000
283	4.95	2	2	32000	150000
257	5.44	2	2	32000	150000
228	6.14	2	2	32000	150000
207	6.76	2	2	32000	150000
178	7.87	2	2	32000	150000

MDR187R97 — 50000 Nm

i	n_a [1/min]	Stopień *Stage* R187	R97	M_{amax} [Nm]	F_{Ra} [N]
29180	0.05	3	3	50000	190000
24296	0.06	3	3	50000	190000
19764	0.07	3	3	50000	190000
17123	0.08	3	3	50000	190000
15185	0.09	3	3	50000	190000
12765	0.11	3	3	50000	190000
11731	0.12	3	3	50000	190000
10417	0.13	3	3	50000	190000
9314	0.15	3	3	50000	190000
8374	0.17	3	3	50000	190000
7268	0.19	3	3	50000	190000
6567	0.21	3	3	50000	190000
6035	0.23	3	3	50000	190000
5359	0.26	3	3	50000	190000
4792	0.29	3	3	50000	190000
4308	0.32	3	3	50000	190000
3739	0.37	3	3	50000	190000
3228	0.43	3	2	50000	190000
2738	0.51	3	2	50000	190000
2521	0.56	3	2	50000	190000
2253	0.62	3	2	50000	190000
2028	0.69	3	2	50000	190000
1837	0.76	3	2	50000	190000
1628	0.86	3	2	50000	190000
1436	0.98	3	2	50000	160000
1248	1.12	3	2	50000	190000
1151	1.22	3	2	50000	160000
936	1.50	3	2	50000	190000
845	1.66	3	2	50000	190000
660	2.12	3	2	50000	160000
555	2.52	3	2	50000	160000
471	2.97	3	2	50000	160000

MDR187R107 — 50000 Nm

i	n_a [1/min]	Stopień *Stage* R187	R107	M_{amax} [Nm]	F_{Ra} [N]
435	3.22	2	2	50000	160000
393	3.56	2	2	50000	160000
357	3.92	2	2	50000	160000
317	4.42	2	2	50000	160000
287	4.87	2	2	50000	160000
247	5.67	2	2	50000	160000
216	6.49	2	2	50000	160000
183	7.65	2	2	50000	160000
160	8.76	2	2	50000	160000
135	10.36	2	2	50000	160000

5.4. Tabele doboru motoreduktorów
5.4. Selection tables for gearmotors

Wyjaśnienie oznaczeń:
Description:

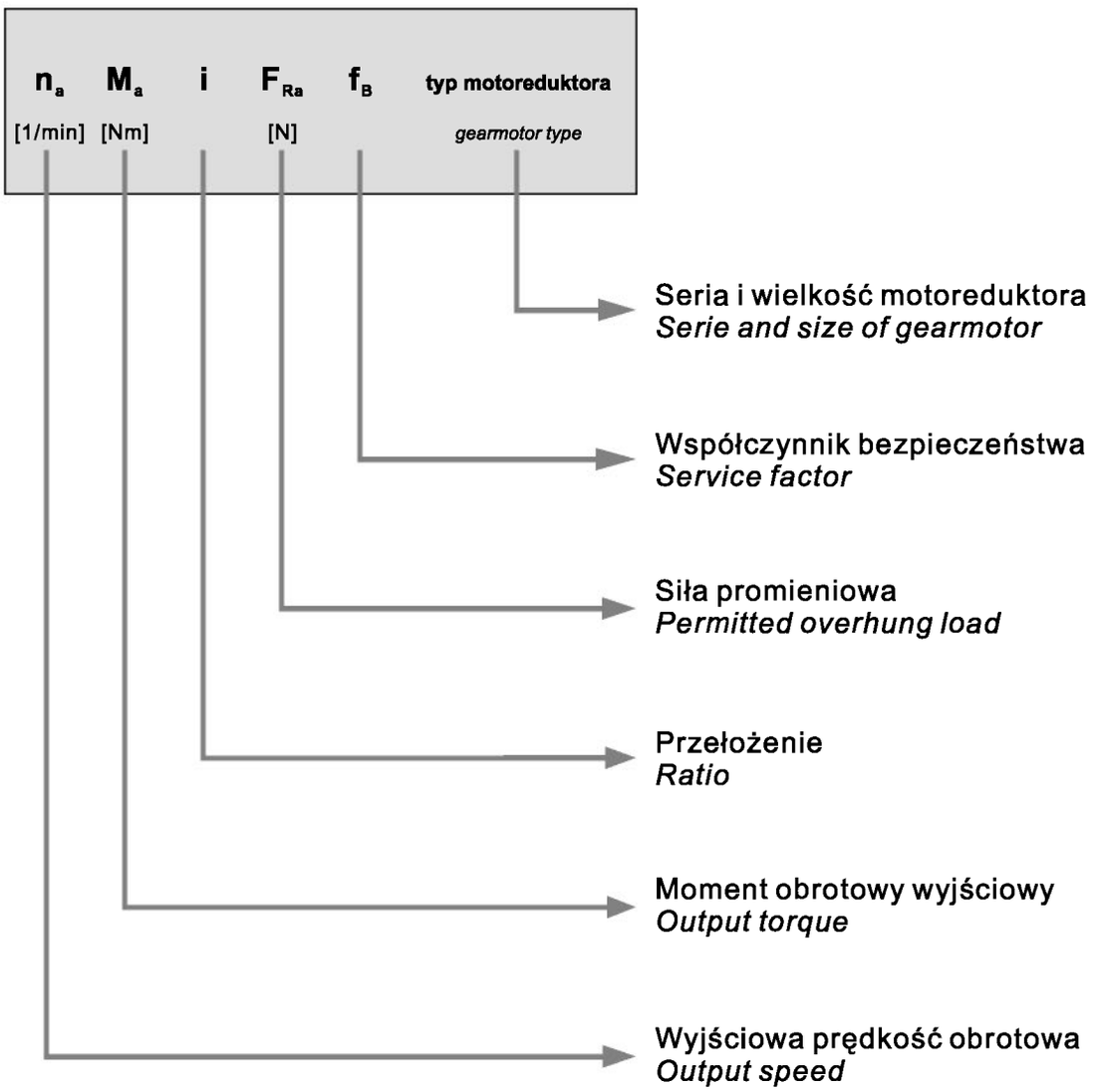

Tabele doboru motoreduktorów zawierają oznaczenia silników standardowych zintegrowanych. Każdy motoreduktor może być wyposażony w dowolny, inny silnik, również znormalizowany IEC.
Selection tables for gearmotors include descriptions of standard, integrated electric motors. Each gearmotor can be supplied with any other electric motor, including IEC standard.

n_a [1/min]	M_a [Nm]	i	F_{Ra} [N]	f_B	typ motoreduktora *gearmotor type*
0.12kW					
0.06	13300	21342	62000	1.00	MDR147R77DS63S4 MDRF147R77DS63S4
0.08	11400	18210	65700	1.15	
0.09	9930	15923	67900	1.30	
0.10	8780	14075	69400	1.50	
0.11	7650	12344	70700	1.70	MDR147R77DS63S4 MDRF147R77DS63S4
0.12	6740	11143	71600	1.95	
0.14	6040	9743	72200	2.2	
0.16	4830	8443	73100	2.7	
0.19	4180	7307	73400	3.1	
0.21	3690	6447	73700	3.5	
0.25	3190	5568	73900	4.1	
0.11	8060	12921	53300	1.00	MDR137R77DS63S4 MDRF137R77DS63S4
0.12	7260	11712	54900	1.10	
0.13	6390	10573	56400	1.25	
0.16	5030	8784	58400	1.60	
0.18	4090	7479	59400	1.95	
0.21	4060	6559	59400	1.95	
0.24	3190	5834	60200	2.5	
0.27	3170	5116	60200	2.5	
0.18	4410	7583	28800	0.95	MDR107R77DS63S4 MDRF107R77DS63S4
0.20	3690	6743	32400	1.15	
0.23	3660	5914	32500	1.15	
0.27	2830	5168	35500	1.50	
0.31	2540	4435	36100	1.70	
0.35	2270	3896	36500	1.90	
0.45	1880	3039	36900	2.3	
0.35	2470	3918	36200	1.75	MDR107R77DS63S4 MDRF107R77DS63S4
0.41	2110	3343	36700	2.0	
0.45	1910	3034	36900	2.3	
0.52	1670	2653	37100	2.6	
0.61	1440	2280	37300	3.0	
0.67	1300	2067	37400	3.3	
0.30	3050	4559	17700	1.00	MDR97R57DS63S4 MDRF97R57DS63S4
0.34	2570	4004	23700	1.15	
0.40	2270	3481	25200	1.30	
0.29	3240	4678	4840	0.95	MDR97R57DS63S4 MDRF97R57DS63S4
0.32	2980	4309	20400	1.00	
0.37	2560	3702	23700	1.15	
0.46	2080	3019	26100	1.45	
0.52	1810	2668	27100	1.65	
0.61	1480	2245	27700	2.0	
0.68	1310	2016	27900	2.3	
0.80	1200	1733	28000	2.5	
0.45	2120	3065	25900	1.40	MDR97R57DS63S4 MDRF97R57DS63S4
0.51	1880	2722	26800	1.60	

n_a [1/min]	M_a [Nm]	i	F_{Ra} [N]	f_B	typ motoreduktora *gearmotor type*
0.12kW					
0.60	1590	2311	27500	1.90	MDR97R57DS63S4 MDRF97R57DS63S4
0.66	1430	2078	27700	2.1	
0.76	1240	1823	28000	2.4	
0.87	1070	1583	28200	2.8	
0.99	910	1396	28300	3.3	
1.1	775	1228	28400	3.9	
0.48	1770	2873	15200	0.90	MDR87R57DS63S4 MDRF87R57DS63S4
0.70	1300	1961	18500	1.20	
0.50	1850	2770	10700	0.85	MDR87R57DS63S4 MDRF87R57DS63S4
0.53	1790	2595	15000	0.85	
0.65	1430	2129	17700	1.10	
0.72	1270	1930	18600	1.20	
0.80	1120	1733	19300	1.40	
0.79	1150	1737	19200	1.35	MDR87R57DS63S4 MDRF87R57DS63S4
0.91	1010	1524	19800	1.55	
1.1	810	1303	20000	1.90	
1.2	710	1143	20000	2.2	
1.6	585	885	20000	2.7	
1.8	515	776	20000	3.0	
2.0	450	685	20000	3.4	
2.3	360	599	20000	4.3	
0.97	950	1430	8220	0.85	MDR77R37DS63S4 MDRF77R37DS63S4
1.1	940	1303	8660	0.85	
1.2	800	1124	10100	1.05	
1.3	740	1047	10600	1.10	
1.5	640	915	11300	1.30	
0.99	940	1394	8660	0.85	MDR77R37DS63S4 MDRF77R37DS63S4
1.1	820	1218	9910	1.00	
1.3	740	1084	10600	1.10	
1.5	665	940	11200	1.25	
1.7	525	821	12000	1.55	
1.9	480	731	12200	1.70	
2.1	460	646	12300	1.80	
2.7	380	520	12600	2.2	MDR77R37DS63S4 MDRF77R37DS63S4
3.1	325	451	12700	2.5	
3.3	300	422	12800	2.7	
3.8	255	365	12900	3.2	
1.4	655	956	5950	0.90	MDR67R37DS63S4 MDRF67R37DS63S4
1.6	630	891	7190	0.95	
1.9	505	730	8530	1.2	
2.1	440	644	9060	1.35	
2.4	385	571	9430	1.55	
2.8	320	486	9790	1.85	
1.7	590	836	7670	1.00	MDR67R37DS63S4 MDRF67R37DS63S4
1.8	495	750	8630	1.2	

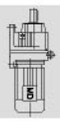

n_a [1/min]	M_a [Nm]	i	F_{Ra} [N]	f_B	typ motoreduktora *gearmotor type*
0.12kW					
2.1	440	646	9050	1.35	MDR67R37DS63S4 MDRF67R37DS63S4
2.4	400	574	9330	1.5	
2.8	345	495	9660	1.75	
3.2	285	438	9940	2.1	
1.8	550	782	4650	0.8	MDR57R37DS63S4 MDRF57R37DS63S4
2.0	455	678	7070	1.00	
2.3	415	604	7260	1.1	
2.6	375	537	7400	1.2	
2.9	330	471	7550	1.35	
3.9	245	357	7770	1.85	
4.3	215	319	7830	2.1	
3.8	260	359	7730	1.75	MDR57R37DS63S4 MDRF57R37DS63S4
4.3	235	324	7790	1.95	
4.8	205	290	7840	2.2	
5.3	185	262	7880	2.4	
5.6	171	246	7900	2.6	
6.3	150	220	7930	3.0	
2.4	375	572	2500	0.80	MDR47R37DS63S4 MDRF47R37DS63S4
2.7	345	510	4360	0.85	
3.2	285	436	5490	1.05	
3.4	265	408	5590	1.1	
4.0	220	344	5790	1.35	
2.8	365	502	3020	0.8	MDR47R37DS63S4 MDRF47R37DS63S4
3.2	315	429	5350	0.95	
3.7	270	372	5580	1.1	
4.0	250	348	5670	1.2	
4.6	210	301	5810	1.4	
5.4	177	255	5930	1.7	
6.0	156	228	5980	1.95	
7.1	130	195	6040	2.3	
4.1	225	338	4570	0.90	MDR37R17DS63S4 MDRF37R17DS63S4
4.7	210	296	4790	0.95	
5.3	184	259	5130	1.1	
6.0	163	228	5360	1.25	
6.9	140	199	5550	1.4	
8.0	123	172	5680	1.65	
4.2	240	328	3730	0.85	MDR37R17DS63S4 MDRF37R17DS63S4
4.8	205	289	4880	1.00	
5.2	192	265	5040	1.05	
6.1	156	226	5410	1.3	
6.8	144	202	5530	1.4	
7.7	125	179	5660	1.6	
6.0	158	229	4090	0.8	MDR27R17DS63S4 MDRF27R17DS63S4
6.9	138	200	4200	0.95	
7.8	121	177	4270	1.05	

n_a [1/min]	M_a [Nm]	i	F_{Ra} [N]	f_B	typ motoreduktora *gearmotor type*
0.12kW					
8.3	116	166	4290	1.1	MDR27R17DS63S4 MDRF27R17DS63S4
6.1	157	227	4100	0.85	MDR27R17DS63S4 MDRF27R17DS63S4
6.8	144	203	4170	0.9	
7.7	125	179	4260	1.05	
8.8	106	156	4330	1.25	
4.6	250	195.24	12900	3.3	MDR77DS63M4 MDRF77DS63M4
5.4	210	166.59	13000	3.9	
6.2	186	145.67	13000	4.4	
4.5	255	199.81	10100	2.4	MDR67DS63M6 MDRF67DS63M6
4.9	235	184.07	10100	2.6	
5.7	200	158.14	10300	3.0	
6.5	175	137.67	10300	3.4	
7.0	164	128.97	10400	3.7	
7.9	145	113.94	10400	4.1	
6.9	166	199.81	10300	3.6	MDR67DS63S4 MDRF67DS63M4
7.5	153	184.07	10400	3.9	
4.8	240	186.89	7780	1.90	MDR57DS63M6 MDRF57DS63M6
5.2	220	172.17	7820	2.1	
6.1	188	147.92	7870	2.4	
7.0	164	128.77	7910	2.7	
7.5	154	120.63	7920	2.9	
8.4	136	106.58	7950	3.3	
9.1	126	98.99	7960	3.6	
7.4	155	186.89	7920	2.9	MDR57DS63S4 MDRF57DS63S4
8.0	143	172.17	7940	3.2	
9.3	123	147.92	7960	3.7	
11	107	128.77	7980	4.2	
5.1	225	176.88	5760	1.35	MDR47DS63M6 MDRF47DS63M6
5.5	210	162.94	5830	1.45	
6.4	178	139.99	5920	1.70	
7.4	155	121.87	5980	1.95	
7.8	147	176.88	6000	2.0	MDR47DS63S4 MDRF47DS63S4
8.5	135	162.94	6030	2.2	
9.9	116	139.99	6070	2.6	
11	101	121.87	6100	3.0	
12	95	114.17	6110	3.2	
14	84	100.86	6120	3.6	
15	78	93.68	6130	3.9	
6.7	172	134.82	5270	1.15	MDR37DS63M6 MDRF37DS63M6
7.3	157	123.66	5410	1.25	
8.6	134	105.28	5600	1.50	
9.9	116	90.77	5730	1.75	
11	108	84.61	5770	1.85	
12	94	73.96	5850	2.1	
10	112	134.82	5750	1.80	MDR37DS63S4 MDRF37DS63S4

n_a [1/min]	M_a [Nm]	i	F_{Ra} [N]	f_B	typ motoreduktora *gearmotor type*
0.12kW					
11	103	123.66	5800	1.95	MDR37DS63S4 MDRF37DS63S4
13	87	105.28	5880	2.3	
15	75	90.77	5930	2.7	
16	70	84.61	5950	2.8	
19	61	73.96	5980	3.3	
7.3	158	123.91	4090	0.80	MDR27DS63M6 MDRF27DS63M6
8.5	134	105.49	4210	0.95	
9.9	116	90.96	4300	1.10	
11	108	84.78	4330	1.20	
12	94	74.11	4370	1.40	
10	112	135.09	4310	1.15	MDR27DS63S4 MDRF27DS63S4
11	103	123.91	4340	1.25	
13	88	105.49	4390	1.50	
15	76	90.96	4430	1.70	
16	70	84.78	4440	1.85	
19	62	74.11	4460	2.1	
20	58	69.47	4470	2.3	
23	51	61.30	4400	2.6	
25	46	55.87	4280	2.8	
29	40	48.17	4090	3.3	
31	37	44.90	4000	3.5	
11	104	81.64	1300	0.80	MDR17DS63M6 MDRF17DS63M6
13	90	70.39	1470	0.95	
14	84	65.61	1860	1.00	
16	73	57.35	2430	1.15	
17	68	53.76	2500	1.25	
19	60	47.44	2500	1.40	
17	68	81.64	2500	1.25	MDR17DS63S4 MDRF17DS63S4
20	58	70.39	2500	1.45	
21	55	65.61	2500	1.55	
24	48	57.35	2500	1.80	
26	45	53.76	2500	1.90	
29	39	47.44	2500	2.2	
31	37	44.18	2500	2.3	
36	32	38.61	2430	2.7	
38	30	36.20	2390	2.8	
43	27	31.94	2310	3.2	
49	24	28.32	2230	3.6	
57	20	24.07	2130	4.3	
55	21	25.23	2160	4.1	MDR17DS63S4 MDRF17DS63S4
60	19	23.15	2110	4.4	
70	16	19.71	2010	5.2	
81	14	16.99	1920	6.0	
87	13	15.84	1880	6.4	
100	12	13.84	1810	7.4	
106	11	12.98	1770	7.9	
121	9.5	11.45	1710	8.5	
136	8.4	10.15	1640	9.2	

n_a [1/min]	M_a [Nm]	i	F_{Ra} [N]	f_B	typ motoreduktora *gearmotor type*
0.12kW					
160	7.2	8.63	1560	10	MDR17DS63S4 MDRF17DS63S4
183	6.3	7.55	1490	8.9	
196	5.8	7.04	1460	9.5	
224	5.1	6.15	1400	11	
239	4.8	5.76	1370	11	
271	4.2	5.09	1320	12	
306	3.7	4.51	1270	13	
360	3.2	3.83	1200	14	
227	5.0	6.07	4270	8.6	MDRX67DS63S4 MDRXF67DS63S4
267	4.3	5.18	4050	17	
305	3.8	4.53	3870	22	
321	3.6	4.30	3810	22	
251	4.6	5.50	3360	8.5	MDRX57DS63S4 MDRXF57DS63S4
272	4.2	5.07	3270	8.6	
317	3.6	4.35	3120	19	
364	3.1	3.79	2980	22	
389	2.9	3.55	2910	24	
440	2.6	3.14	2800	25	
474	2.4	2.91	2730	28	
523	2.2	2.64	2640	31	
582	2.0	2.37	2550	35	
676	1.7	2.04	2430	41	
719	1.6	1.92	2380	43	
835	1.4	1.65	2260	49	
0.18kW					
0.09	15000	14075	50900	0.85	MDR147R77DS63M4 MDRF147R77DS63M4
0.11	13100	12344	62500	1.00	
0.12	11600	11143	65200	1.10	
0.14	10300	9743	67300	1.25	
0.16	8550	8443	69200	1.50	MDR147R77DS63M4 MDRF147R77DS63M4
0.18	7400	7307	70900	1.75	
0.20	6530	6447	71800	2.0	
0.24	5640	5568	72500	2.3	
0.27	5150	4926	72800	2.5	
0.31	4420	4325	73300	2.9	
0.35	3920	3754	73600	3.3	
0.40	3380	3302	73800	3.9	
0.15	8900	8784	50100	0.90	MDR137R77DS63M4 MDRF137R77DS63M4
0.18	7390	7479	54600	1.1	
0.20	6950	6559	55500	1.15	
0.23	5770	5834	57400	1.4	
0.26	5420	5116	57900	1.50	
0.30	4520	4464	59000	1.75	
0.34	3980	3928	59500	2.0	
0.28	5060	4709	58300	1.6	MDR137R77DS63M4 MDRF137R77DS63M4
0.33	4320	4018	59200	1.85	
0.38	3780	3514	59700	2.1	
0.40	3590	3338	59900	2.2	

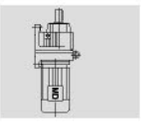

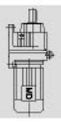

n_a [1/min]	M_a [Nm]	i	F_{Ra} [N]	f_B	typ motoreduktora *gearmotor type*
0.18kW					
0.45	3150	2929	60200	2.5	MDR137R77DS63M4 MDRF137R77DS63M4
0.30	4490	4435	28400	0.95	MDR107R77DS63M4 MDRF107R77DS63M4
0.34	3980	3896	31100	1.10	
0.43	3220	3039	34200	1.35	
0.34	4210	3918	29000	1.00	MDR107R77DS63M4 MDRF107R77DS63M4
0.39	3590	3343	32400	1.2	
0.44	3260	3034	34100	1.30	
0.50	2850	2653	35400	1.50	
0.58	2450	2280	36200	1.75	
0.64	2200	2067	36500	1.95	
0.66	2100	1987	36700	2.1	MDR107R77DS63M4 MDRF107R77DS63M4
0.72	1870	1827	36900	2.3	
0.83	1600	1599	37200	2.7	
0.94	1440	1400	37300	3.0	
1.1	1230	1226	37400	3.5	
0.49	3000	2668	20000	1.0	MDR97R77DS63M4 MDRF97R77DS63M4
0.59	2480	2245	24200	1.2	
0.65	2210	2016	25500	1.35	
0.76	1970	1733	26500	1.5	
0.81	1840	1623	27000	1.65	
0.92	1610	1434	27500	1.85	
1.1	1330	1207	27900	2.3	
1.2	1190	1084	28000	2.5	
1.4	1000	934	28200	3.0	
1.5	940	878	28300	3.2	
1.8	790	755	28400	3.8	
0.49	3090	2722	15900	0.95	MDR97R77DS63M4 MDRF97R77DS63M4
0.57	2620	2311	23400	1.15	
0.64	2360	2078	24800	1.25	
0.76	1850	1733	10800	0.85	MDR87R57DS63M4 MDRF87R57DS63M4
0.89	1690	1489	15900	0.9	
0.95	1580	1395	16700	1.0	
1.1	1380	1232	18000	1.1	
1.2	1280	1145	18600	1.2	
1.3	1150	1037	19200	1.35	
1.4	1020	931	19800	1.5	
1.6	860	802	20000	1.8	
0.76	1850	1737	11200	0.85	MDR87R57DS63M4 MDRF87R57DS63M4
0.87	1680	1524	15900	0.9	
1.0	1390	1303	17900	1.1	
1.2	1220	1143	18900	1.25	
1.5	980	885	19900	1.6	
1.7	860	776	20000	1.8	
1.5	980	858	5830	0.85	MDR77R37DS63M4 MDRF77R37DS63M4
1.7	850	757	9590	0.95	
2.0	750	671	10500	1.1	
2.3	630	571	11400	1.3	MDR77R37DS63M4 MDRF77R37DS63M4
1.6	890	821	9230	0.9	

n_a [1/min]	M_a [Nm]	i	F_{Ra} [N]	f_B	typ motoreduktora *gearmotor type*
0.18kW					
1.8	800	731	10100	1.0	MDR77R37DS63M4 MDRF77R37DS63M4
2.0	745	646	10500	1.1	
2.4	645	560	11300	1.25	
2.7	550	488	11800	1.5	
3.0	490	436	12100	1.7	
3.5	420	373	12400	1.95	
4.0	370	327	12600	2.2	
4.6	330	289	12700	2.5	
2.3	640	571	7060	0.95	MDR67R37DS63M4 MDRF67R37DS63M4
2.7	535	486	8250	1.1	
2.3	655	574	5820	0.9	MDR67R37DS63M4 MDRF67R37DS63M4
2.7	565	495	7950	1.05	
3.0	480	438	8740	1.25	
3.4	425	388	9160	1.4	
3.8	395	344	9380	1.55	
4.5	320	294	9800	1.9	
5.1	290	261	9920	2.1	
2.9	500	454	6650	0.90	MDR57R37DS63M4 MDRF57R37DS63M4
3.2	455	410	7090	1.00	
2.8	540	471	5250	0.85	MDR57R37DS63M4 MDRF57R37DS63M4
3.7	405	357	7300	1.1	
4.1	355	319	7460	1.25	
4.8	300	273	7630	1.5	
5.5	260	241	7730	1.75	
6.1	235	215	7790	1.95	
3.7	420	359	7230	1.05	MDR57R37DS63M4 MDRF57R37DS63M4
4.1	380	324	7380	1.2	
4.6	335	290	7530	1.35	
5.0	305	262	7620	1.5	
5.3	280	246	7680	1.6	
6.0	250	220	7750	1.8	
7.0	210	188	7830	2.1	
8.3	177	159	7890	2.6	
4.4	350	301	4150	0.85	MDR47R37DS63M4 MDRF47R37DS63M4
5.2	290	255	5460	1.05	
5.8	260	228	5630	1.15	
6.8	220	195	5790	1.4	
6.6	230	199	4510	0.85	MDR37R17DS63M4 MDRF37R17DS63M4
7.7	199	172	4960	1.0	
8.8	173	150	5260	1.15	
5.8	250	226	2090	0.8	MDR37R17DS63M4 MDRF37R17DS63M4
6.5	235	202	4050	0.85	
7.4	205	179	4870	0.95	
8.5	176	156	5230	1.15	
9.4	157	141	4100	0.85	MDR27R17DS63M4 MDRF27R17DS63M4
11	139	124	4190	0.95	
12	125	110	4260	1.05	
14	105	94	4340	1.25	

n_a [1/min]	M_a [Nm]	i	F_{Ra} [N]	f_B	typ motoreduktora *gearmotor type*
0.18kW					
9.8	152	135	4120	0.85	MDR27R17DS63M4 MDRF27R17DS63M4
11	139	118	4190	0.95	
13	121	104	4270	1.1	
15	105	90	4340	1.25	
4.5	385	195.24	12500	2.1	MDR77DS63L6 MDRF77DS63L6
5.2	330	166.59	12700	2.5	
6.0	290	145.67	12800	2.9	MDR77DS63L6 MDRF77DS63L6
6.3	275	138.39	12900	3.0	
7.2	240	121.42	12900	3.4	
6.8	255	195.24	12900	3.2	MDR77DS63M4 MDRF77DS63M4
7.9	215	166.59	13000	3.8	
9.1	190	145.67	13000	4.3	
9.5	180	138.39	13000	4.6	
4.3	395	199.81	9370	1.50	MDR67DS63L6 MDRF67DS63L6
4.7	365	184.07	9560	1.65	
5.5	310	158.14	9830	1.90	
6.3	270	137.67	10000	2.2	
6.8	255	128.97	10100	2.4	
7.6	225	113.94	10200	2.7	
8.2	210	105.83	10200	2.9	
9.1	190	95.91	10300	3.2	
10	170	86.11	10300	3.5	
12	147	74.17	10400	4.1	
12	138	69.75	10400	4.4	
6.6	260	199.81	10100	2.3	MDR67DS63M4 MDRF67DS63M4
7.2	240	184.07	10100	2.5	
8.4	205	158.14	10200	2.9	
9.6	179	137.67	10300	3.4	
10	168	128.97	10300	3.6	
12	148	113.94	10400	4.0	
12	138	105.83	10400	4.4	
4.7	370	186.89	7420	1.20	MDR57DS63L6 MDRF57DS63L6
5.1	340	172.17	7510	1.30	
5.9	290	147.92	7650	1.55	
6.8	255	128.77	7740	1.75	
7.2	240	120.63	7780	1.90	
7.1	245	186.89	7770	1.85	MDR57DS63M4 MDRF57DS63M4
7.7	225	172.17	7810	2.0	
8.9	193	147.92	7870	2.3	
10	168	128.77	7900	2.7	
11	157	120.63	7920	2.9	
12	139	106.58	7940	3.2	
13	129	98.99	7950	3.5	
15	117	89.71	7970	3.9	
7.5	230	176.88	5740	1.30	MDR47DS63M4 MDRF47DS63M4
8.1	210	162.94	5810	1.40	
9.4	182	139.99	5910	1.65	
11	159	121.87	5980	1.90	

n_a [1/min]	M_a [Nm]	i	F_{Ra} [N]	f_B	typ motoreduktora *gearmotor type*
0.18kW					
12	149	114.17	6000	2.0	MDR47DS63M4 MDRF47DS63M4
13	131	100.86	6040	2.3	
14	122	93.68	6060	2.5	
16	111	84.90	6080	2.7	
17	99	76.23	6100	3.0	
7.0	245	123.66	3060	0.80	MDR37DS63L6 MDRF37DS63L6
8.3	210	105.28	4840	0.95	
9.6	179	90.77	5190	1.10	
10	167	84.61	5310	1.20	
9.8	176	134.82	5230	1.15	MDR37DS63M4 MDRF37DS63M4
11	161	123.66	5370	1.25	
13	137	105.28	5580	1.45	
15	118	90.77	5710	1.70	
16	110	84.61	5760	1.80	
18	96	73.96	5840	2.1	
19	90	69.33	5870	2.2	
22	80	61.18	5920	2.5	
24	73	55.76	5940	2.8	
27	63	48.08	5960	3.2	
11	161	123.91	4070	0.80	MDR27DS63M4 MDRF27DS63M4
13	137	105.49	4200	0.95	
15	118	90.96	4280	1.10	
16	110	84.78	4320	1.20	
18	97	74.11	4370	1.35	
19	91	69.47	4380	1.45	
22	80	61.30	4320	1.65	
24	73	55.87	4210	1.80	
27	63	48.17	4040	2.1	
29	59	44.90	3960	2.2	
34	51	39.25	3810	2.5	
36	48	36.79	3740	2.7	
41	42	32.47	3610	3.1	
46	38	28.78	3480	3.5	
54	32	24.47	3310	4.1	
47	37	28.37	3470	3.5	MDR27DS63M4 MDRF27DS63M4
51	34	26.09	3380	3.8	
59	29	22.32	3220	4.5	
68	25	19.35	3090	5.2	
73	24	18.08	3020	5.5	
84	20	15.63	2890	6.4	
99	17	13.28	2750	7.5	
16	106	81.64	1046	0.80	MDR17DS63M4 MDRF17DS63M4
19	92	70.39	1330	0.95	
20	85	65.61	1740	1.00	
23	75	57.35	2350	1.15	
25	70	53.76	2500	1.20	
28	62	47.44	2450	1.40	
30	58	44.18	2410	1.50	

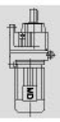

n_a [1/min]	M_a [Nm]	i	F_{Ra} [N]	f_B	typ motoreduktora *gearmotor type*
0.18kW					
34	50	38.61	2340	1.70	MDR17DS63M4 MDRF17DS63M4
36	47	36.20	2300	1.80	
41	42	31.94	2240	2.0	
47	37	28.32	2170	2.3	
55	31	24.07	2080	2.7	
34	50	25.23	2330	1.70	MDR17DS63L6 MDRF17DS63L6
38	46	23.15	2290	1.85	
44	39	19.71	2200	2.2	
52	33	25.23	2110	2.6	MDR17DS63M4 MDRF17DS63M4
57	30	23.15	2060	2.8	
67	26	19.71	1970	3.3	
78	22	16.99	1890	3.8	
83	21	15.84	1860	4.1	
95	18	13.84	1790	4.7	
102	17	12.98	1760	5.0	
115	15	11.45	1690	5.4	
130	13	10.15	1640	5.8	
153	11	8.63	1560	6.4	
175	9.8	7.55	1480	5.7	
188	9.2	7.04	1450	6.0	
215	8.0	6.15	1390	6.8	
229	7.5	5.76	1370	7.1	
259	6.6	5.09	1320	7.7	
293	5.9	4.51	1270	8.1	
344	5.0	3.83	1210	9.0	
268	6.4	10.15	1310	12	MDR17DS63S2 MDRF17DS63S2
315	5.5	8.63	1250	13	
360	4.8	7.55	1190	12	
387	4.4	7.04	1160	13	
442	3.9	6.15	1120	14	
472	3.6	5.76	1090	15	
535	3.2	5.09	1050	16	
603	2.8	4.51	1010	17	
710	2.4	3.83	960	19	
143	12	6.07	4940	3.6	MDRX67DS63L6 MDRXF67DS63L6
168	10	5.18	4690	7.3	
192	8.9	4.53	4490	9.2	
202	8.5	4.30	4410	9.4	
218	7.9	6.07	4310	5.4	MDRX67DS63M4 MDRXF67DS63M4
255	6.7	5.18	4090	11	
292	5.9	4.53	3920	14	
307	5.6	4.30	3850	14	
350	4.9	3.77	3690	18	
413	4.2	3.20	3500	24	
457	3.8	2.89	3380	28	
519	3.3	2.54	3240	36	
550	3.1	2.40	3180	40	
646	2.7	2.04	3020	50	

n_a [1/min]	M_a [Nm]	i	F_{Ra} [N]	f_B	typ motoreduktora *gearmotor type*
0.18kW					
158	11	5.50	3880	3.6	MDRX57DS63L6 MDRXF57DS63L6
172	10	5.07	3780	3.6	
200	8.6	4.35	3600	7.9	
230	7.5	3.79	3440	9.2	
240	7.2	5.50	3400	5.4	MDRX57DS63M4 MDRXF57DS63M4
261	6.6	5.07	3310	5.5	
303	5.7	4.35	3150	12	
348	4.9	3.79	3010	14	
372	4.6	3.55	2950	15	
421	4.1	3.14	2830	16	
453	3.8	2.91	2760	18	
500	3.4	2.64	2670	20	
557	3.1	2.37	2580	22	
647	2.7	2.04	2460	26	
688	2.5	1.92	2410	28	
799	2.2	1.65	2290	31	
0.25kW					
0.13	15200	9743	48200	0.85	MDR147R77DS63L4 MDRF147R77DS63L4
0.15	12800	8443	63100	1.00	
0.18	11000	7307	66200	1.20	
0.20	9740	6447	68100	1.35	
0.23	8410	5568	69800	1.55	
0.26	7600	4926	70700	1.7	
0.30	6570	4325	71700	2.0	
0.35	5790	3754	72400	2.3	
0.39	5020	3302	72900	2.6	
0.45	4380	2898	73300	3.0	
0.22	8670	5834	51100	0.90	MDR137R77DS63L4 MDRF137R77DS63L4
0.25	7970	5116	53500	1.00	
0.29	6740	4464	55800	1.20	
0.33	5930	3928	57100	1.35	
0.28	7430	4709	54600	1.1	MDR137R77DS63L4 MDRF137R77DS63L4
0.32	6340	4018	56500	1.25	
0.37	5550	3514	57700	1.45	
0.39	5270	3338	58100	1.5	
0.44	4620	2929	58900	1.75	
0.49	4190	2658	59300	1.9	MDR137R77DS63L4 MDRF137R77DS63L4
0.54	3800	2412	59700	2.1	
0.63	3270	2073	60100	2.5	
0.71	2810	1839	60500	2.8	
0.93	2180	1397	60800	3.7	
1.1	1890	1226	61000	4.2	
0.43	4730	3039	25600	0.90	MDR107R77DS63L4 MDRF107R77DS63L4

n_a [1/min]	M_a [Nm]	i	F_{Ra} [N]	f_B	typ motoreduktora *gearmotor type*
0.25kW					
0.43	4790	3034	23600	0.90	MDR107R77DS63L4 MDRF107R77DS63L4
0.65	3100	1987	34600	1.40	MDR107R77DS63L4 MDRF107R77DS63L4
0.71	2790	1827	35600	1.55	
0.81	2410	1599	36300	1.80	
0.93	2140	1400	36600	2.0	
1.1	1840	1226	36900	2.3	
1.4	1440	939	37300	3.0	
1.6	1240	822	37400	3.5	
0.64	3160	2016	12400	0.95	MDR97R57DS63L4 MDRF97R57DS63L4
0.75	2840	1733	22000	1.05	
0.80	2660	1623	23200	1.15	
0.71	2960	1823	21100	1.0	MDR97R57DS63L4 MDRF97R57DS63L4
0.82	2570	1583	23700	1.15	
0.93	2230	1396	25400	1.35	
1.1	1940	1228	26600	1.55	
1.2	1750	1069	27300	1.7	
1.4	1530	938	27600	1.95	
1.6	1300	824	27900	2.3	
1.8	1160	737	28100	2.6	
2.1	1000	632	28200	3.0	
1.1	1850	1145	10700	0.85	MDR87R57DS63L4 MDRF87R57DS63L4
1.2	1670	1037	16000	0.95	
1.4	1490	931	17400	1.05	
1.6	1270	802	18600	1.2	
1.1	1800	1143	14700	0.85	MDR87R57DS63L4 MDRF87R57DS63L4
1.5	1420	885	17800	1.1	
1.7	1250	776	18700	1.25	
1.9	1100	685	19400	1.4	
2.2	930	599	20000	1.65	
2.5	820	525	20000	1.9	
2.8	715	456	20000	2.2	
4.9	415	268	20000	3.7	
2.3	920	571	8910	0.90	MDR77R37DS63L4 MDRF77R37DS63L4
2.3	930	560	8780	0.90	MDR77R37DS63L4 MDRF77R37DS63L4
2.7	795	488	10100	1.05	
3.0	705	436	10900	1.15	
3.5	610	373	11500	1.35	
4.0	535	327	11900	1.55	
4.5	475	289	12200	1.75	
5.0	425	260	12400	1.95	
5.8	355	224	12600	2.3	
3.3	620	388	7290	0.95	MDR67R37DS63L4 MDRF67R37DS63L4
3.8	565	344	7950	1.05	
4.4	465	294	8870	1.3	
5.0	425	261	9180	1.4	
5.5	380	234	9460	1.6	

n_a [1/min]	M_a [Nm]	i	F_{Ra} [N]	f_B	typ motoreduktora *gearmotor type*
0.25kW					
6.5	320	200	9780	1.85	MDR67R37DS63L4 MDRF67R37DS63L4
7.4	280	176	9980	2.2	
8.2	250	158	10100	2.4	
3.4	645	384	6960	0.95	MDR67R37DS63L4 MDRF67R37DS63L4
3.6	600	359	7550	1.00	
4.2	515	310	8430	1.15	
4.9	435	264	9100	1.4	
5.5	385	235	9420	1.55	
6.5	325	201	9750	1.85	
7.2	295	181	9910	2.0	
4.1	520	319	6050	0.85	MDR57R37DS63L4 MDRF57R37DS63L4
4.8	440	273	7160	1.05	
5.4	380	241	7380	1.2	
6.1	340	215	7510	1.3	
6.9	300	187	7630	1.5	
7.9	260	164	7730	1.75	
9.2	225	142	7800	2.0	
4.0	545	324	4980	0.85	MDR57R37DS63L4 MDRF57R37DS63L4
4.5	485	290	6950	0.95	
5.0	435	262	7160	1.05	
5.3	405	246	7280	1.1	
5.9	360	220	7450	1.25	
5.7	375	228	2440	0.8	MDR47R37DS63L4 MDRF47R37DS63L4
6.7	315	195	5320	0.95	
7.1	295	182	5440	1.0	
8.5	245	154	5680	1.2	
8.7	250	150	2540	0.8	MDR37R17DS63L4 MDRF37R17DS63L4
10	210	130	4790	0.95	
10	200	124	4930	1.0	
12	178	110	5200	1.1	
14	152	94	5460	1.3	
8.4	250	156	2350	0.8	MDR37R17DS63L4 MDRF37R17DS63L4
9.7	220	135	4660	0.9	
10	215	127	4770	0.95	
13	174	104	5250	1.15	
14	150	90	5470	1.35	
2.3	1020	289.74	28200	3.0	MDR97D80N8 MDRF97D80N8
2.7	900	255.71	28300	3.3	
2.8	850	241.25	28400	3.5	
3.1	760	216.28	28400	4.0	
2.8	870	246.54	20000	1.80	MDR87D80N8 MDRF87D80N8
3.1	760	216.54	20000	2.0	
3.3	720	205.71	20000	2.2	
3.7	640	181.77	20000	2.4	
4.1	585	166.59	11600	1.40	MDR77D80N8 MDRF77D80N8
4.7	510	145.67	12000	1.60	
4.9	485	138.39	12100	1.70	
5.6	425	121.42	12400	1.90	

n_a [1/min]	M_a [Nm]	i	F_{Ra} [N]	f_B	typ motoreduktora *gearmotor type*
0.25kW					
4.5	530	195.24	11900	1.55	MDR77DS71S6 MDRF77DS71S6
5.3	450	166.59	12300	1.80	
6.0	395	145.67	12500	2.1	
6.7	360	195.24	12600	2.3	MDR77DS63L4 MDRF77DS63L4
7.8	305	166.59	12800	2.7	
8.9	270	145.67	12900	3.1	
9.4	255	138.39	12900	3.2	
11	225	121.42	13000	3.7	
4.3	555	158.14	8060	1.10	MDR67D80N8 MDRF67D80N8
4.9	485	137.67	8730	1.25	
5.3	455	128.97	8970	1.35	
6.0	400	113.94	9340	1.50	
4.4	540	199.81	8190	1.10	MDR67DS71S6 MDRF67DS71S6
4.8	500	184.07	8590	1.20	
5.6	430	158.14	9140	1.40	
6.4	375	137.67	9500	1.60	
6.8	350	128.97	9630	1.70	
7.7	310	113.94	9840	1.95	
8.3	285	105.83	9940	2.1	
6.5	365	199.81	9540	1.65	MDR67DS63L4 MDRF67DS63L4
7.1	340	184.07	9700	1.80	
8.2	290	158.14	9930	2.1	
9.4	255	137.67	10100	2.4	
10	235	128.97	10100	2.5	
11	210	113.94	10200	2.9	
12	194	105.83	10300	3.1	
14	176	95.91	10300	3.4	
15	158	86.11	10400	3.8	
4.7	505	186.89	6450	0.90	MDR57DS71S6 MDRF57DS71S6
5.1	465	172.17	7030	0.95	
5.9	400	147.92	7300	1.10	
6.8	350	128.77	7480	1.30	
7.3	325	120.63	7550	1.35	
8.3	290	106.58	7660	1.55	
8.9	270	98.99	7710	1.70	
7.0	345	186.89	7500	1.30	MDR57DS63L4 MDRF57DS63L4
7.6	315	172.17	7590	1.40	
8.8	270	147.92	7700	1.65	
10	235	128.77	7780	1.90	
11	220	120.63	7810	2.0	
12	196	106.58	7860	2.3	
13	182	98.99	7880	2.5	
14	165	89.71	7910	2.7	
16	148	80.55	7930	3.0	
19	127	69.23	7960	3.5	
7.4	325	176.88	5280	0.90	MDR47DS63L4 MDRF47DS63L4
8.0	300	162.94	5420	1.00	
9.3	255	139.99	5630	1.15	
11	225	121.87	5770	1.35	

n_a [1/min]	M_a [Nm]	i	F_{Ra} [N]	f_B	typ motoreduktora *gearmotor type*
0.25kW					
11	210	114.17	5820	1.45	MDR47DS63L4 MDRF47DS63L4
13	185	100.86	5900	1.60	
14	172	93.68	5940	1.75	
15	156	84.90	5980	1.90	
17	140	76.23	6020	2.1	
19	126	68.54	6050	2.4	
20	118	64.21	6070	2.5	
23	104	56.73	6090	2.9	
25	97	52.69	6100	3.1	
27	88	47.75	6080	3.4	
9.6	250	134.82	2630	0.80	MDR37DS63L4 MDRF37DS63L4
11	225	123.66	4560	0.90	
12	193	105.28	5030	1.05	
14	167	90.77	5320	1.20	
15	155	84.61	5420	1.30	
18	136	73.96	5590	1.45	
19	127	69.33	5650	1.55	
21	112	61.18	5750	1.80	
23	102	55.76	5800	1.95	
27	88	48.08	5870	2.3	
29	82	44.81	5760	2.4	
33	72	39.17	5540	2.8	
35	67	36.72	5430	3.0	
40	60	32.40	5230	3.4	
15	156	84.78	4100	0.85	MDR27DS63L4 MDRF27DS63L4
18	136	74.11	4210	0.95	
19	128	69.47	4250	1.00	
21	113	61.30	4190	1.15	
23	103	55.87	4090	1.25	
27	89	48.17	3940	1.45	
29	83	44.90	3870	1.60	
33	72	39.25	3730	1.80	
35	68	36.79	3670	1.90	
40	60	32.47	3540	2.2	
45	53	28.78	3420	2.5	
53	45	24.47	3270	2.9	
46	52	28.37	3410	2.5	MDR27DS63L4 MDRF27DS63L4
50	48	26.09	3330	2.7	
58	41	22.32	3180	3.2	
67	36	19.35	3050	3.7	
72	33	18.08	2990	3.9	
83	29	15.63	2860	4.5	
98	24	13.28	2730	5.3	
110	22	11.86	2630	5.9	
128	19	10.13	2510	6.6	
138	17	9.41	2440	7.1	
159	15	8.16	2330	7.7	
170	14	7.63	2290	8.0	

n_a [1/min]	M_a [Nm]	i	F_{Ra} [N]	f_B	typ motoreduktora *gearmotor type*
0.25kW					
197	12	6.59	2180	8.8	MDR27DS63L4 MDRF27DS63L4
232	10	5.60	2080	9.6	
260	9.2	5.00	2000	10	
304	7.8	4.27	1910	11	
325	7.3	4.00	1870	12	
386	6.2	3.37	1770	13	
23	105	57.35	756	0.80	MDR17DS63L4 MDRF17DS63L4
24	99	53.76	785	0.85	
27	87	47.44	1630	1.00	
29	81	44.18	2000	1.05	
34	71	38.61	2200	1.20	
36	67	36.20	2180	1.30	
41	59	31.94	2130	1.45	
46	52	28.32	2070	1.65	
54	44	24.07	2000	1.90	
52	46	25.23	2020	1.85	MDR17DS63L4 MDRF17DS63L4
56	43	23.15	1980	2.0	
66	36	19.71	1910	2.3	
77	31	16.99	1840	2.7	
82	29	15.84	1810	2.9	
94	25	13.84	1750	3.3	
100	24	12.98	1720	3.6	
114	21	11.45	1660	3.9	
128	19	10.15	1600	4.1	
151	16	8.63	1530	4.6	
172	14	7.55	1450	4.0	
185	13	7.04	1420	4.3	
211	11	6.15	1370	4.8	
226	11	5.76	1350	5.0	
256	9.3	5.09	1300	5.5	
288	8.3	4.51	1250	5.8	
339	7.0	3.83	1190	6.4	
433	5.5	6.15	1110	9.8	MDR17DS63M2 MDRF17DS63M2
461	5.2	5.76	1090	10	
523	4.6	5.09	1050	11	
590	4.0	4.51	1010	12	
694	3.4	3.83	960	13	
145	17	6.07	4890	2.6	MDRX67DS71S6 MDRXF67DS71S6
170	14	5.18	4650	5.4	
194	12	4.53	4450	6.7	
205	12	4.30	4380	6.8	
214	11	6.07	4310	3.9	MDRX67DS63L4 MDRXF67DS63L4
251	9.5	5.18	4100	7.9	
287	8.3	4.53	3920	9.9	
302	7.9	4.30	3860	10	
345	6.9	3.77	3700	13	
406	5.9	3.20	3500	17	
450	5.3	2.89	3390	20	

n_a [1/min]	M_a [Nm]	i	F_{Ra} [N]	f_B	typ motoreduktora *gearmotor type*
0.25kW					
511	4.7	2.54	3250	25	MDRX67DS63L4 MDRXF67DS63L4
542	4.4	2.40	3190	28	
636	3.8	2.04	3020	35	
160	15	5.50	3840	2.6	MDRX57DS63L4 MDRXF57DS63L4
174	14	5.07	3740	2.6	
202	12	4.35	3560	5.8	
232	10	3.79	3410	6.7	
236	10	5.50	3390	3.9	
257	9.3	5.07	3300	3.9	
299	8.0	4.35	3150	8.5	
343	7.0	3.79	3010	9.9	
366	6.5	3.55	2950	11	
414	5.8	3.14	2830	11	
446	5.3	2.91	2760	13	
492	4.8	2.64	2680	14	
548	4.4	2.37	2580	16	
637	3.7	2.04	2460	19	
677	3.5	1.92	2410	20	
787	3.0	1.65	2300	23	
0.37kW					
0.19	15900	7307	37500	0.80	MDR147R77DS71S4 MDRF147R77DS71S4
0.21	14100	6447	60400	0.90	
0.25	12100	5568	64300	1.05	
0.28	10900	4926	66400	1.20	
0.32	9480	4325	68500	1.35	
0.37	8310	3754	70000	1.55	
0.42	7240	3302	71100	1.80	
0.48	6320	2898	71900	2.1	
0.31	9740	4464	39400	0.80	MDR137R77DS71S4 MDRF137R77DS71S4
0.35	8570	3928	51500	0.95	
0.34	9080	4018	49200	0.90	MDR137R77DS71S4 MDRF137R77DS71S4
0.39	7940	3514	53500	1.00	
0.41	7540	3338	54300	1.05	
0.47	6620	2929	56000	1.20	
0.56	5600	2484	57600	1.45	
0.62	5030	2242	58400	1.60	
0.52	6000	2658	57000	1.35	MDR137R77DS71S4 MDRF137R77DS71S4
0.57	5440	2412	57800	1.45	
0.67	4680	2073	58800	1.70	
0.75	4060	1839	59400	1.95	
0.99	3130	1397	60200	2.6	
1.1	2720	1226	60500	2.9	
1.3	2440	1090	60700	3.3	
1.5	2130	951	60900	3.8	
0.67	4660	2067	27300	0.90	MDR107R77DS71S4 MDRF107R77DS71S4
0.82	3790	1693	31900	1.15	
0.89	3420	1550	33500	1.25	
0.98	3110	1407	34600	1.40	
1.1	2670	1209	35900	1.60	
1.3	2330	1055	36400	1.85	

n_a [1/min]	M_a [Nm]	i	F_{Ra} [N]	f_B	typ motoreduktora *gearmotor type*
0.37kW					
0.69	4450	1987	28600	0.95	MDR107R77DS71S4 MDRF107R77DS71S4
0.76	4030	1827	30800	1.05	
0.86	3490	1599	33200	1.25	
0.99	3090	1400	34600	1.40	
1.1	2670	1226	35900	1.60	
1.5	2070	939	36700	2.1	
1.7	1790	822	37000	2.4	
0.96	3240	1434	10800	0.95	MDR97R57DS71S4 MDRF97R57DS71S4
1.1	2760	1207	22500	1.10	
1.3	2470	1084	24300	1.20	
0.99	3180	1396	10800	0.95	MDR97R57DS71S4 MDRF97R57DS71S4
1.1	2780	1228	22500	1.10	
1.3	2480	1069	24200	1.20	
1.5	2160	938	25700	1.40	
1.7	1860	824	26900	1.60	
1.9	1670	737	27400	1.80	
2.2	1430	632	27700	2.1	
3.2	980	431	28200	3.1	
3.6	860	379	28300	3.5	
4.1	765	336	28400	3.9	
1.7	1810	802	13800	0.85	MDR87R57DS71S4 MDRF87R57DS71S4
1.8	1700	754	15800	0.90	
2.1	1450	649	17600	1.05	
1.8	1780	776	15100	0.85	MDR87R57DS71S4 MDRF87R57DS71S4
2.0	1570	685	16800	1.00	
2.3	1340	599	18300	1.15	
2.6	1170	525	19100	1.30	
3.0	1030	456	19700	1.50	
5.2	595	268	20000	2.6	
5.8	525	236	20000	2.9	
2.6	1260	538	18700	1.25	MDR87R57DS71S4 MDRF87R57DS71S4
2.9	1100	472	19400	1.40	
3.5	930	400	20000	1.65	
3.8	830	361	20000	1.85	
3.2	980	436	5390	0.85	MDR77R37DS71S4 MDRF77R37DS71S4
3.7	860	373	9520	0.95	
4.2	755	327	10500	1.10	
4.8	670	289	11100	1.2	
5.3	600	260	11600	1.35	
6.2	510	224	12000	1.60	
7.0	445	197	12300	1.85	
8.1	390	169	12500	2.1	
9.3	340	149	12700	2.4	
4.7	665	294	4670	0.90	MDR67R37DS71S4 MDRF67R37DS71S4
5.3	600	261	7550	1.00	
5.9	540	234	8220	1.1	
6.9	460	200	8930	1.3	
2.7	1330	255.71	27900	2.3	MDR97D90S8 MDRF97D90S8
2.8	1250	241.25	28000	2.4	
3.1	1120	216.28	28100	2.7	

n_a [1/min]	M_a [Nm]	i	F_{Ra} [N]	f_B	typ motoreduktora *gearmotor type*
0.37kW					
3.7	970	186.30	28300	3.1	MDR97D90S8 MDRF97D90S8
3.1	1140	289.74	28100	2.6	MDR97DS71M6 MDRF97DS71M6
3.5	1000	255.71	28200	3.0	
3.7	950	241.25	28300	3.2	
4.2	850	216.28	28400	3.5	
3.1	1130	216.54	19300	1.40	MDR87D90S8 MDRF87D90S8
3.3	1070	205.71	19600	1.45	
3.7	940	181.77	20000	1.65	
3.7	970	246.54	20000	1.60	MDR87DS71M6 MDRF87DS71M6
4.2	850	216.54	20000	1.80	
4.4	810	205.71	20000	1.90	
4.9	715	181.77	20000	2.2	
5.8	610	155.34	20000	2.5	
6.3	560	142.41	20000	2.8	
4.7	755	145.67	10500	1.10	MDR77D90S8 MDRF77D90S8
4.9	720	138.39	10800	1.15	
5.6	630	121.42	11400	1.30	
5.4	655	166.59	11200	1.25	MDR77DS71M6 MDRF77DS71M6
6.2	570	145.67	11700	1.45	
6.5	545	138.39	11900	1.50	
7.1	500	195.24	12100	1.65	MDR77DS71S4 MDRF77DS71S4
8.3	425	166.59	12400	1.90	
9.5	375	145.67	12600	2.2	
10	355	138.39	12600	2.3	
11	310	121.42	12800	2.6	
13	265	102.99	12900	3.1	
15	240	92.97	12900	3.5	
5.7	620	158.14	7300	0.95	MDR67DS71M6 MDRF67DS71M6
6.5	540	137.67	8210	1.10	
7.0	505	128.97	8530	1.20	
7.9	445	113.94	9010	1.35	
6.9	510	199.81	8480	1.15	MDR67DS71S4 MDRF67DS71S4
7.5	470	184.07	8820	1.25	
8.7	405	158.14	9310	1.50	
10	355	137.67	9620	1.70	
11	330	128.97	9740	1.80	
12	290	113.94	9920	2.1	
13	270	105.83	10000	2.2	
14	245	95.91	10100	2.4	
16	220	86.11	10200	2.7	
19	190	74.17	10300	3.2	
20	179	69.75	10300	3.4	
23	157	61.26	10400	3.8	
24	146	56.89	10400	4.1	
7.0	505	128.77	6510	0.90	MDR57DS71M6 MDRF57DS71M6
7.5	475	120.63	7000	0.95	
8.4	420	106.58	7240	1.10	
9.1	390	98.99	7350	1.15	

n_a [1/min]	M_a [Nm]	i	F_{Ra} [N]	f_B	typ motoreduktora *gearmotor type*
0.37kW					
7.4	480	186.89	6980	0.95	MDR57DS71S4 MDRF57DS71S4
8.0	440	172.17	7140	1.00	
9.3	380	147.92	7390	1.20	
11	330	128.77	7550	1.35	
11	310	120.63	7610	1.45	
13	275	106.58	7700	1.65	
14	255	98.99	7750	1.80	
15	230	89.71	7800	1.95	
17	205	80.55	7840	2.2	
20	177	69.23	7890	2.5	
21	166	64.85	7910	2.7	
24	147	57.29	7760	3.1	
26	136	53.22	7600	3.3	
29	124	48.23	7380	3.6	
9.9	360	139.99	3490	0.85	MDR47DS71S4 MDRF47DS71S4
11	310	121.87	5350	0.95	
12	290	114.17	5460	1.05	
14	260	100.86	5630	1.15	
15	240	93.68	5700	1.25	
16	215	84.90	5790	1.40	
18	195	76.23	5870	1.55	
20	176	68.54	5930	1.70	
21	164	64.21	5960	1.80	
24	145	56.73	6010	2.1	
26	135	52.69	5990	2.2	
29	122	47.75	5820	2.5	
32	110	42.87	5650	2.7	
37	95	36.93	5410	3.2	
40	89	34.73	5310	3.4	
41	87	33.79	5270	2.8	MDR47DS71S4 MDRF47DS71S4
44	80	31.12	5150	2.8	
52	69	26.74	4920	4.4	
59	60	23.28	4720	5.0	
63	56	21.81	4620	5.4	
15	230	90.77	4250	0.85	MDR37DS71S4 MDRF37DS71S4
16	215	84.61	4720	0.90	
19	189	73.96	5070	1.05	
20	178	69.33	5210	1.15	MDR37DS71S4 MDRF37DS71S4
23	157	61.18	5410	1.30	
25	143	55.76	5530	1.40	
29	123	48.08	5590	1.60	
31	115	44.81	5480	1.75	
35	100	39.17	5290	2.0	
38	94	36.72	5190	2.1	
43	83	32.40	5010	2.4	
48	74	28.73	4850	2.7	
57	63	24.42	4620	3.2	

n_a [1/min]	M_a [Nm]	i	F_{Ra} [N]	f_B	typ motoreduktora *gearmotor type*
0.37kW					
49	73	28.32	4830	2.8	MDR37DS71S4 MDRF37DS71S4
53	67	26.03	4710	2.8	
62	57	22.27	4500	3.5	
71	49	19.31	4320	4.1	
76	46	18.05	4230	4.3	
88	40	15.60	4050	5.0	MDR37DS71S4 MDRF37DS71S4
104	34	13.25	3850	5.6	
117	30	11.83	3720	6.0	
23	157	61.30	3870	0.85	MDR27DS71S4 MDRF27DS71S4
25	143	55.87	3800	0.90	
29	123	48.17	3680	1.05	
31	115	44.90	3620	1.15	
35	101	39.25	3510	1.30	
38	94	36.79	3460	1.40	
43	83	32.47	3350	1.55	
48	74	28.78	3250	1.75	
56	63	24.47	3110	2.1	
49	73	28.37	3240	1.80	MDR27DS71S4 MDRF27DS71S4
53	67	26.09	3170	1.95	
62	57	22.32	3040	2.3	
71	50	19.35	2920	2.6	
76	46	18.08	2860	2.8	
88	40	15.63	2750	3.2	
104	34	13.28	2620	3.8	
36	99	38.61	770	0.85	MDR17DS71S4 MDRF17DS71S4
38	93	36.20	1260	0.90	
43	82	31.94	1910	1.05	
49	73	28.32	1880	1.15	
57	62	24.07	1830	1.40	
55	65	25.23	1840	1.30	MDR17DS71S4 MDRF17DS71S4
60	59	23.15	1820	1.45	
70	51	19.71	1760	1.70	
81	44	16.99	1710	1.95	
87	41	15.84	1680	2.1	
100	35	13.84	1630	2.4	
106	33	12.98	1610	2.6	
121	29	11.45	1560	2.8	
136	26	10.15	1520	3.0	
160	22	8.63	1460	3.3	
183	19	7.55	1370	2.9	
196	18	7.04	1350	3.1	
224	16	6.15	1300	3.4	
239	15	5.76	1280	3.6	
271	13	5.09	1240	3.9	
306	12	4.51	1200	4.2	
360	9.8	3.83	1150	4.6	
191	19	13.84	1390	4.6	MDR17DS63L2 MDRF17DS63L2
204	17	12.98	1360	4.9	

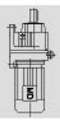

n_a [1/min]	M_a [Nm]	i	F_{Ra} [N]	f_B	typ motoreduktora *gearmotor type*
0.37kW					
231	15	11.45	1320	5.3	MDR17DS63L2 MDRF17DS63L2
261	14	10.15	1270	5.7	
307	12	8.63	1220	6.3	
351	10	7.55	1150	5.5	
377	9.4	7.04	1130	5.8	
431	8.2	6.15	1090	6.6	
460	7.7	5.76	1070	6.9	
521	6.8	5.09	1030	7.5	
588	6.0	4.51	990	8.0	
691	5.1	3.83	950	8.8	
174	20	5.18	4570	3.7	MDRX67DS71M6 MDRXF67DS71M6
199	18	4.53	4380	4.6	
209	17	4.30	4310	4.7	
239	15	3.77	4130	5.9	
227	16	6.07	4200	2.8	MDRX67DS71S4 MDRXF67DS71S4
267	13	5.18	3990	5.6	
305	12	4.53	3820	7.1	
321	11	4.30	3760	7.3	
366	9.7	3.77	3610	9.0	
431	8.2	3.20	3420	12	
478	7.4	2.89	3310	14	
543	6.5	2.54	3170	18	
575	6.1	2.40	3110	20	
675	5.2	2.04	2950	26	
207	17	4.35	3500	4.0	MDRX57DS71M6 MDRXF57DS71M6
238	15	3.79	3350	4.6	
254	14	3.55	3280	5.0	
251	14	5.50	3300	2.8	MDRX57DS71S4 MDRXF57DS71S4
272	13	5.07	3210	2.8	
317	11	4.35	3060	6.1	
364	9.7	3.79	2930	7.1	
389	9.1	3.55	2870	7.6	
440	8.0	3.14	2760	8.1	
474	7.5	2.91	2690	8.9	
523	6.8	2.64	2610	10	
582	6.1	2.37	2520	11	
676	5.2	2.04	2400	13	
719	4.9	1.92	2350	14	
835	4.2	1.65	2240	16	
0.55kW					
0.09	50495	15185	190000	0.99	MDR187R97DS71M4
0.11	42448	12765	190000	1.18	
0.12	39009	11731	190000	1.28	
0.13	34640	10417	190000	1.44	
0.21	21837	6567	190000	2.29	

n_a [1/min]	M_a [Nm]	i	F_{Ra} [N]	f_B	typ motoreduktora *gearmotor type*
0.55kW					
0.15	31873	9585	150000	1.00	MDR177R97DS71M4
0.19	24238	7289	150000	1.32	
0.23	19782	5949	150000	1.62	
0.31	15067	4531	150000	2.12	
0.22	19800	6077	120000	0.90	MDR167R97DS71M4 MDRF167R97DS71M4
0.25	17600	5407	120000	1.00	
0.29	15100	4650	120000	1.20	
0.33	13300	4129	120000	1.35	
0.28	16900	4926	22000	0.75	MDR147R77DS71M4 MDRF147R77DS71M4
0.31	14700	4325	53900	0.90	
0.36	12900	3754	62900	1.00	
0.41	11200	3302	65900	1.15	
0.47	9830	2898	98000	1.30	
0.53	8890	2555	69300	1.45	MDR147R77DS71M4 MDRF147R77DS71M4
0.62	7700	2211	70600	1.70	
0.70	6790	1951	71500	1.90	
0.80	5810	1705	72400	2.3	
0.89	5210	1536	72800	2.5	
1.0	4510	1329	73300	2.9	
1.2	3920	1166	73600	3.3	
0.55	8650	2484	51200	0.90	MDR137R77DS71M4 MDRF137R77DS71M4
0.51	9250	2658	49200	0.90	MDR137R77DS71M4 MDRF137R77DS71M4
0.56	8400	2412	52900	0.95	
0.66	7220	2073	55200	1.15	
0.74	6320	1839	56700	1.30	
0.85	5420	1598	58000	1.50	
0.97	4840	1397	58700	1.70	
1.1	4220	1226	59400	1.95	
1.2	3780	1090	59800	2.2	
1.4	3300	951	60200	2.5	
1.6	2820	831	60500	2.9	
0.97	4830	1407	23400	0.90	MDR107R77DS71M4 MDRF107R77DS71M4
1.1	4150	1209	30400	1.05	
1.3	3620	1055	32800	1.20	
1.5	3170	919	34500	1.35	
1.7	2830	815	35600	1.55	
1.9	2470	717	36200	1.75	
2.2	2160	626	36600	2.0	
0.97	4810	1400	25600	0.90	MDR107R77DS71M4 MDRF107R77DS71M4
1.1	4180	1226	30400	1.05	
1.2	3740	1104	32400	1.15	
1.5	3220	939	34400	1.35	
1.7	2800	822	35700	1.55	
1.5	3240	938	4620	0.95	MDR97R57DS71M4 MDRF97R57DS71M4
1.7	2810	824	22200	1.05	
1.8	2510	737	24000	1.15	
2.1	2200	632	25700	1.35	

n_a [1/min]	M_a [Nm]	i	F_{Ra} [N]	f_B	typ motoreduktora *gearmotor type*
0.55kW					
2.4	1920	560	26700	1.55	MDR97R57DS71M4 MDRF97R57DS71M4
2.8	1670	484	27400	1.80	
3.2	1510	431	27600	2.0	
3.6	1320	379	27900	2.3	
4.0	1180	336	28000	2.6	
4.6	1030	296	28200	2.9	
5.5	860	249	28300	3.5	
2.6	1820	525	13600	0.85	MDR87R57DS71M4 MDRF87R57DS71M4
3.0	1580	456	16700	1.00	
3.4	1370	398	18100	1.15	
3.9	1210	352	18900	1.30	
4.4	1040	305	19700	1.50	
2.9	1690	472	15900	0.90	MDR87R57DS71M4 MDRF87R57DS71M4
3.4	1420	400	17800	1.10	
3.8	1280	361	18600	1.20	
4.9	990	276	4510	0.85	MDR77R37DS71M4 MDRF77R37DS71M4
5.8	840	236	9730	1.00	
6.2	785	221	10200	1.05	
7.3	660	186	11200	1.25	
2.7	1980	255.71	26500	1.50	MDR97D90L8 MDRF97D90L8
2.8	1860	241.25	26900	1.60	
3.1	1670	216.28	27400	1.80	
3.1	1690	289.74	27400	1.75	MDR97DS80S6 MDRF97DS80S6
3.5	1490	255.71	27700	2.0	
3.7	1410	241.25	27800	2.1	
4.2	1260	216.28	28000	2.4	
4.7	1120	289.74	28100	2.7	MDR97DS71M4 MDRF97DS71M4
5.3	990	255.71	28200	3.0	
5.6	930	241.25	28300	3.2	
6.3	840	216.28	28400	3.6	
3.7	1440	246.54	17700	1.10	MDR87DS80S6 MDRF87DS80S6
4.2	1260	216.54	18700	1.25	
4.4	1200	205.71	19000	1.30	
4.9	1060	181.77	19600	1.45	
5.8	910	155.34	20000	1.70	
5.5	950	246.54	20000	1.65	MDR87DS71M4 MDRF87DS71M4
6.3	840	216.54	20000	1.85	
6.6	795	205.71	20000	1.95	
7.5	700	181.77	20000	2.2	
8.8	600	155.34	20000	2.6	
9.6	550	142.41	20000	2.8	
11	485	124.97	20000	3.2	
11	455	118.43	20000	3.4	
13	400	103.65	20000	3.9	
8.2	645	166.59	11300	1.25	MDR77DS71M4 MDRF77DS71M4
9.3	565	145.67	11800	1.45	
9.8	535	138.39	11900	1.55	
11	470	121.42	12200	1.75	
13	400	102.99	12500	2.1	

n_a [1/min]	M_a [Nm]	i	F_{Ra} [N]	f_B	typ motoreduktora *gearmotor type*
0.55kW					
15	360	92.97	12600	2.3	MDR77DS71M4 MDRF77DS71M4
17	315	81.80	12800	2.6	
18	300	77.24	12800	2.8	
21	255	65.77	12900	3.2	
8.6	610	158.14	7430	1.00	MDR67DS71M4 MDRF67DS71M4
9.9	530	137.67	8290	1.15	
11	500	128.97	8600	1.20	
12	440	113.94	9060	1.35	
13	410	105.83	9280	1.45	
14	370	95.91	9520	1.60	
16	335	86.11	9730	1.80	
18	285	74.17	9940	2.1	
20	270	69.75	10000	2.2	
22	235	61.26	10100	2.5	
24	220	56.89	10200	2.7	
11	465	120.63	7030	0.95	MDR57DS71M4 MDRF57DS71M4
13	410	106.58	7260	1.10	
14	380	98.99	7370	1.20	
15	345	89.71	7490	1.30	
17	310	80.55	7600	1.45	
20	265	69.23	7710	1.70	
21	250	64.85	7750	1.80	
24	220	57.29	7530	2.0	
26	205	53.22	7390	2.2	
28	186	48.23	7190	2.4	
31	167	43.30	6980	2.7	
36	144	37.30	6700	3.1	
39	136	35.07	6580	3.3	
52	102	26.31	6060	4.4	MDR57DS71M4 MDRF57DS71M4
54	97	24.99	5970	4.7	
62	85	21.93	5740	5.3	
73	72	18.60	5460	6.3	
15	360	93.68	3280	0.85	MDR47DS71M4 MDRF47DS71M4
16	330	84.90	5230	0.90	
18	295	76.23	5450	1.00	
20	265	68.54	5600	1.15	
21	250	64.21	5670	1.20	
24	220	56.73	5790	1.35	
26	205	52.69	5770	1.45	
28	184	47.75	5630	1.65	
32	166	42.87	5470	1.80	
37	143	36.93	5260	2.1	
39	134	34.73	5180	2.2	
46	115	29.88	4970	2.6	
51	103	26.74	4820	2.9	MDR47DS71M4 MDRF47DS71M4
58	90	23.28	4630	3.3	
62	84	21.81	4550	3.6	

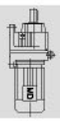

n_a [1/min]	M_a [Nm]	i	F_{Ra} [N]	f_B	typ motoreduktora *gearmotor type*
0.55kW					
22	235	61.18	3910	0.85	MDR37DS71M4 MDRF37DS71M4
24	215	55.76	4740	0.95	
28	186	48.08	5120	1.10	
30	173	44.81	5230	1.15	
35	151	39.17	5070	1.30	
37	142	36.72	4990	1.40	
42	125	32.40	4840	1.60	
47	111	28.73	4700	1.80	
56	94	24.42	4500	2.1	
61	86	22.27	4390	2.3	MDR37DS71M4 MDRF37DS71M4
70	75	19.31	4220	2.7	
75	70	18.05	4140	2.9	
87	60	15.60	3970	3.3	
103	51	13.25	3790	3.7	
115	46	11.83	3670	4.0	
35	152	39.25	3280	0.85	MDR27DS71M4 MDRF27DS71M4
37	142	36.79	3240	0.90	
42	125	32.47	3160	1.05	
47	111	28.78	3080	1.15	
56	95	24.47	2970	1.40	
61	86	22.32	2910	1.50	MDR27DS71M4 MDRF27DS71M4
70	75	19.35	2810	1.75	
75	70	18.08	2760	1.85	
87	60	15.63	2660	2.2	
102	51	13.28	2550	2.5	
115	46	11.86	2470	2.8	
134	39	10.13	2370	3.1	
145	36	9.41	2290	3.4	
167	32	8.16	2200	3.7	
178	29	7.63	2160	3.8	
206	26	6.59	2070	4.2	
243	22	5.60	1980	4.6	
272	19	5.00	1910	4.9	
318	17	4.27	1830	5.3	
340	15	4.00	1790	5.5	
404	13	3.37	1700	6.1	
50	105	53.76	1235	0.80	MDR17DS71M2 MDRF17DS71M2
57	92	47.44	1280	0.90	
61	86	44.18	1610	1.00	
70	75	38.61	1590	1.15	
69	76	19.71	1590	1.10	MDR17DS71M4 MDRF17DS71M4
80	66	16.99	1560	1.30	
86	61	15.84	1550	1.40	
98	54	13.84	1510	1.60	
105	50	12.98	1500	1.70	
119	44	11.45	1460	1.85	
134	39	10.15	1430	1.95	

n_a [1/min]	M_a [Nm]	i	F_{Ra} [N]	f_B	typ motoreduktora *gearmotor type*
0.55kW					
158	33	8.63	1380	2.2	MDR17DS71M4 MDRF17DS71M4
180	29	7.55	1290	1.90	
193	27	7.04	1270	2.0	
221	24	6.15	1240	2.3	
236	22	5.76	1220	2.4	
267	20	5.09	1190	2.6	
302	17	4.51	1150	2.8	
355	15	3.83	1110	3.0	
313	17	8.63	1170	4.3	MDR17DS71M2 MDRF17DS71M2
358	15	7.55	1100	3.8	
384	14	7.04	1080	4.0	
439	12	6.15	1050	4.5	
468	11	5.76	1030	4.7	
531	9.9	5.09	990	5.2	
599	8.8	4.51	960	5.4	
704	7.5	3.83	920	6.0	
174	30	5.18	4510	2.5	MDRX67DS80S6 MDRXF67DS80S6
199	26	4.53	4320	3.1	
209	25	4.30	4260	3.2	
239	22	3.77	4090	4.0	
263	20	5.18	3970	3.8	MDRX67DS71M4 MDRXF67DS71M4
300	18	4.53	3800	4.7	
316	17	4.30	3740	4.8	
360	15	3.77	3590	6.0	
425	12	3.20	3410	8.1	
471	11	2.89	3300	9.5	
535	9.8	2.54	3170	12	
567	9.3	2.40	3110	13	
666	7.9	2.04	2950	17	
732	7.2	1.86	2860	18	
845	6.2	1.61	2730	18	
207	25	4.35	3440	2.7	MDRX57DS80S6 MDRXF57DS80S6
238	22	3.79	3300	3.1	
254	21	3.55	3230	3.3	
287	18	3.14	3110	3.5	
309	17	2.91	3040	3.9	
312	17	4.35	3040	4.1	MDRX57DS71M4 MDRXF57DS71M4
359	15	3.79	2910	4.7	
383	14	3.55	2850	5.0	
434	12	3.14	2740	5.4	
467	11	2.91	2680	6.0	
515	10	2.64	2600	6.8	
574	9.2	2.37	2510	7.5	
666	7.9	2.04	2390	8.7	
708	7.4	1.92	2350	9.3	
823	6.4	1.65	2230	11	
921	5.7	1.48	2150	12	
1045	5.0	1.30	2070	13	

n_a [1/min]	M_a [Nm]	i	F_{Ra} [N]	f_B	typ motoreduktora *gearmotor type*
0.75kW					
0.12	53195	11731	190000	0.94	MDR187R97DS80S4
0.13	47236	10417	190000	1.06	
0.15	42235	9314	190000	1.18	
0.17	37972	8374	190000	1.32	
0.19	32957	7268	190000	1.52	
0.21	29778	6567	190000	1.68	
0.23	27366	6035	190000	1.83	
0.26	24301	5359	190000	2.06	
0.19	33294	7289	150000	0.96	MDR177R97DS80S4
0.23	27171	5949	150000	1.18	
0.30	20696	4531	150000	1.55	
0.37	17129	3750	150000	1.87	
0.45	13977	3060	150000	2.29	
0.30	20700	4650	120000	0.85	MDR167R97DS80S4 MDRF167R97DS80S4
0.33	18300	4129	120000	1.00	
0.52	12100	2657	120000	1.50	MDR167R97DS80S4 MDRF167R97DS80S4
0.59	10500	2333	120000	1.7	
0.66	8300	2085	120000	1.95	
0.96	6550	1438	120000	2.8	
0.42	15300	3302	46300	0.85	MDR147R77DS80S4 MDRF147R77DS80S4
0.48	13400	2898	61800	1.00	
0.54	12100	2555	64400	1.10	MDR147R77DS80S4 MDRF147R77DS80S4
0.62	10500	2211	67100	1.25	
0.71	9230	1951	68800	1.40	
0.81	7940	1705	70400	1.65	
0.90	7130	1536	71200	1.80	
1.0	6170	1329	72100	2.1	
1.2	5380	1166	72700	2.4	
0.74	8730	1863	50900	0.90	MDR137R77DS80S4 MDRF137R77DS80S4
0.87	7390	1586	54600	1.1	
0.99	6580	1391	56100	1.2	
1.1	5920	1256	57100	1.35	
0.67	9810	2073	37900	0.80	MDR137R77DS80S4 MDRF137R77DS80S4
0.75	8610	1839	51400	0.95	
0.86	7410	1598	54600	1.10	
0.99	6590	1397	56100	1.2	
1.1	5750	1226	57400	1.40	
1.3	5140	1090	58200	1.55	
1.5	4490	951	59000	1.80	
1.7	3860	831	59600	2.1	
1.9	3360	730	60100	2.4	
1.3	4940	1055	16400	0.85	MDR107R77DS80S4 MDRF107R77DS80S4
1.5	4310	919	29400	1.00	
1.7	3840	815	31700	1.1	
1.2	5050	1104	28000	0.85	MDR107R77DS80S4 MDRF107R77DS80S4
1.5	4400	939	28900	1.00	

n_a [1/min]	M_a [Nm]	i	F_{Ra} [N]	f_B	typ motoreduktora *gearmotor type*
0.75kW					
1.7	3830	822	31800	1.1	MDR107R77DS80S4 MDRF107R77DS80S4
3.7	1710	369	37100	2.5	
4.3	1490	323	37200	2.9	
2.2	2990	632	20100	1.00	MDR97R57DS80S4 MDRF97R57DS80S4
2.5	2620	560	23400	1.15	
2.8	2270	484	25200	1.3	
3.2	2050	431	26200	1.45	
3.6	1800	379	27100	1.65	
4.1	1600	336	27500	1.90	
4.7	1400	296	27800	2.1	
5.5	1170	249	28100	2.6	
3.5	1870	398	9720	0.85	MDR87R57DS80S4 MDRF87R57DS80S4
3.9	1650	352	16200	0.95	
4.5	1430	305	17700	1.10	
5.2	1260	268	18700	1.25	
5.8	1110	236	19400	1.40	
3.8	1740	361	15500	0.90	MDR87R57DS80S4 MDRF87R57DS80S4
4.6	1440	300	17700	1.10	
5.4	1220	256	18900	1.25	
2.8	2610	251.15	36000	1.65	MDR107D100M8 MDRF107D100M8
3.0	2390	229.95	36300	1.80	
3.4	2110	203.16	36700	2.0	
3.2	2240	216.28	25300	1.35	MDR97D100M8 MDRF97D100M8
3.7	1930	186.30	26600	1.55	
4.1	1760	170.02	27200	1.70	
3.5	2030	255.71	26200	1.45	MDR97DS80M6 MDRF97DS80M6
3.7	1920	241.25	26700	1.55	
4.2	1720	216.28	27300	1.75	
4.8	1500	289.74	27600	2.0	MDR97DS80S4 MDRF97DS80S4
5.4	1330	255.71	27900	2.3	
5.7	1250	241.25	28000	2.4	
6.4	1120	216.28	28100	2.7	
7.4	970	186.30	28300	3.1	
8.1	880	170.02	28300	3.4	
4.2	1720	216.54	15600	0.90	MDR87DS80M6 MDRF87DS80M6
4.4	1640	205.71	16300	0.95	
4.9	1450	181.77	17600	1.05	
5.8	1240	155.34	18800	1.25	MDR87DS80M6 MDRF87DS80M6
6.3	1130	142.41	19300	1.35	
5.6	1280	246.54	18600	1.20	MDR87DS80S4 MDRF87DS80S4
6.4	1120	216.54	19300	1.40	
6.7	1070	205.71	19600	1.45	
7.6	940	181.77	20000	1.65	
8.9	810	155.34	20000	1.90	
9.7	740	142.41	20000	2.0	
11	650	124.97	20000	2.4	
12	615	118.43	20000	2.5	
13	540	103.65	20000	2.9	
15	485	93.38	20000	3.2	

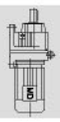

n_a [1/min]	M_a [Nm]	i	F_{Ra} [N]	f_B	typ motoreduktora *gearmotor type*
0.75kW					
8.3	860	166.59	9490	0.95	MDR77DS80S4 MDRF77DS80S4
9.5	755	145.67	10500	1.10	
10	720	138.39	10800	1.15	
11	630	121.42	11400	1.30	MDR77DS80S4 MDRF77DS80S4
13	535	102.99	11900	1.55	
15	485	92.97	12200	1.70	
17	425	81.80	12400	1.95	
18	400	77.24	12500	2.1	
21	340	65.77	12700	2.4	
24	300	57.68	12800	2.7	
27	270	52.07	12900	3.0	
30	240	45.81	12900	3.5	
32	225	43.26	13000	3.7	
11	670	128.97	4040	0.90	MDR67DS80S4 MDRF67DS80S4
12	590	113.94	7660	1.00	
13	550	105.83	8120	1.10	
14	500	95.91	8600	1.20	
16	445	86.11	9010	1.35	
19	385	74.17	9430	1.55	
20	360	69.75	9570	1.65	
23	320	61.26	9800	1.90	
24	295	56.89	9910	2.0	
27	270	51.56	10000	2.2	
30	240	46.29	10100	2.5	
13	555	106.58	4610	0.80	MDR57DS80S4 MDRF57DS80S4
14	515	98.99	6200	0.90	
15	465	89.71	7040	0.95	
17	420	80.55	7240	1.10	
20	360	69.23	7450	1.25	
21	335	64.85	7430	1.35	
24	295	57.29	7220	1.50	
26	275	53.22	7090	1.65	MDR57DS80S4 MDRF57DS80S4
29	250	48.23	6930	1.80	
32	225	43.30	6740	2.0	
37	194	37.30	6490	2.3	
39	182	35.07	6380	2.5	
46	157	30.18	6130	2.9	
51	140	26.97	5940	3.2	
52	137	26.31	5900	3.3	MDR57DS80S4 MDRF57DS80S4
55	130	24.99	5820	3.5	
63	114	21.93	5610	4.0	
74	97	18.60	5350	4.7	
20	355	68.54	3660	0.85	MDR47DS80S4 MDRF47DS80S4
21	335	64.21	4950	0.90	
24	295	56.73	5450	1.00	
26	275	52.69	5480	1.10	MDR47DS80S4 MDRF47DS80S4
29	250	47.75	5370	1.20	
32	225	42.87	5240	1.35	

n_a [1/min]	M_a [Nm]	i	F_{Ra} [N]	f_B	typ motoreduktora *gearmotor type*
0.75kW					
37	192	36.93	5060	1.55	MDR47DS80S4 MDRF47DS80S4
40	180	34.73	4980	1.65	
46	155	29.88	4800	1.95	
52	139	26.70	4660	2.2	
58	122	23.59	4510	2.5	
52	139	26.74	4660	2.2	MDR47DS80S4 MDRF47DS80S4
59	121	23.28	4490	2.5	
63	113	21.18	4420	2.7	
72	100	19.27	4270	3.0	
77	93	17.89	4180	3.1	
85	84	16.22	4070	3.3	
29	250	48.08	2330	0.80	MDR37DS80S4 MDRF37DS80S4
31	235	44.81	4230	0.85	
35	205	39.17	4720	1.00	
38	191	36.72	4740	1.05	MDR37DS80S4 MDRF37DS80S4
43	168	32.40	4610	1.20	
48	149	28.73	4490	1.35	
57	127	24.42	4320	1.60	
62	116	22.27	4230	1.75	MDR37DS80S4 MDRF37DS80S4
71	100	19.31	4080	2.0	
76	94	18.05	4010	2.1	
88	81	15.60	3850	2.5	
104	69	13.25	3690	2.8	
117	61	11.83	3570	3.0	
137	53	10.11	3420	3.2	
146	49	9.47	3360	3.4	
48	149	28.78	2880	0.85	MDR27DS80S4 MDRF27DS80S4
56	127	24.47	2800	1.00	
62	116	22.32	2750	1.10	MDR27DS80S4 MDRF27DS80S4
71	100	19.35	2670	1.30	
76	94	18.08	2630	1.40	
88	81	15.63	2550	1.60	
104	69	13.28	2450	1.90	
116	62	11.86	2380	2.1	
136	53	10.13	2290	2.3	
147	49	9.41	2210	2.5	
169	42	8.16	2130	2.7	
181	40	7.63	2090	2.8	
209	34	6.59	2010	3.1	
246	29	5.60	1930	3.4	
276	26	5.00	1870	3.7	
70	102	19.71	1465	0.85	MDR17DS80S4 MDRF17DS80S4
81	88	16.99	1390	0.95	
87	82	15.84	1380	1.05	
100	72	13.84	1370	1.20	
106	67	12.98	1360	1.25	
121	59	11.45	1350	1.35	
136	53	10.15	1320	1.45	

n_a [1/min]	M_a [Nm]	i	F_{Ra} [N]	f_B	typ motoreduktora *gearmotor type*
0.75kW					
160	45	8.63	1290	1.60	MDR17DS80S4 MDRF17DS80S4
183	39	7.55	1200	1.45	
196	37	7.04	1180	1.50	
224	32	6.15	1160	1.70	
239	30	5.76	1150	1.75	
271	26	5.09	1120	1.95	
306	23	4.51	1090	2.0	
360	20	3.83	1060	2.3	
236	30	11.45	1200	2.7	MDR17DS80S2 MDRF17DS80S2
266	27	10.15	1170	2.9	
313	23	8.63	1130	3.1	
358	20	7.55	1060	2.8	
384	19	7.04	1040	2.9	
439	16	6.15	1010	3.3	
468	15	5.76	990	3.5	
531	14	5.09	960	3.8	
599	12	4.51	930	4.0	
704	10	3.83	890	4.4	
199	36	4.53	4260	2.3	MDRX67DS80M6 MDRXF67DS80M6
209	34	4.30	4200	2.3	
239	30	3.77	4040	2.9	
281	26	3.20	3840	3.9	
267	27	5.18	3900	2.8	MDRX67DS80S4 MDRXF67DS80S4
305	24	4.53	3750	3.5	
321	22	4.30	3690	3.6	
366	20	3.77	3540	4.4	
431	17	3.20	3360	6.0	
478	15	2.89	3260	7.1	
543	13	2.54	3130	8.9	
575	13	2.40	3070	9.8	
675	11	2.04	2920	13	
743	9.6	1.86	2830	13	
858	8.3	1.61	2700	14	
238	30	3.79	3240	2.3	MDRX57DS80M6 MDRXF57DS80M6
254	28	3.55	3180	2.4	
287	25	3.14	3060	2.6	
309	23	2.91	3000	2.9	
341	21	2.64	2910	3.3	
317	23	4.35	2980	3.0	MDRX57DS80S4 MDRXF57DS80S4
364	20	3.79	2860	3.5	
389	18	3.55	2800	3.8	
440	16	3.14	2700	4.0	
474	15	2.91	2630	4.4	
523	14	2.64	2560	5.0	
582	12	2.37	2470	5.6	
676	11	2.04	2360	6.5	
719	10	1.92	2310	6.9	
835	8.6	1.65	2210	8.0	
935	7.7	1.48	2130	8.8	
1060	6.8	1.30	2050	9.3	

n_a [1/min]	M_a [Nm]	i	F_{Ra} [N]	f_B	typ motoreduktora *gearmotor type*
1.1kW					
0.19	48339	7268	190000	1.03	MDR187R97DS80M4
0.21	43677	6567	190000	1.14	
0.23	40134	6035	190000	1.25	
0.26	35639	5359	190000	1.40	
0.29	31868	4792	190000	1.57	
0.32	28653	4308	190000	1.74	
0.37	24869	3739	190000	2.01	
0.43	21955	3228	190000	2.28	
0.31	30135	4531	150000	1.06	MDR177R97DS80M4
0.37	24941	3750	150000	1.28	
0.45	20352	3060	150000	1.57	
0.68	13985	2056	150000	2.29	
0.53	17900	2657	120000	1.00	MDR167R97DS80M4 MDRF167R97DS80M4
0.60	15600	2333	120000	1.15	
0.67	13800	2085	120000	1.30	
0.75	12300	1877	120000	1.45	
0.84	11000	1670	120000	1.65	
0.97	96800	1438	120000	1.85	
1.1	8620	1279	120000	2.1	
1.2	7510	1123	120000	2.4	
0.63	15300	2211	46800	0.85	MDR147R77DS80M4 MDRF147R77DS80M4
0.72	13500	1951	61700	0.95	
0.82	11700	1705	65200	1.15	
0.91	10500	1536	67100	1.25	
1.0	9060	1329	69000	1.45	
1.2	7920	1166	70400	1.65	
1.4	6960	1029	71400	1.85	
1.6	6030	889	72200	2.2	
1.8	5300	784	72700	2.5	
2.0	4680	695	73200	2.8	
1.0	9610	1391	41900	0.85	MDR137R77DS80M4 MDRF137R77DS80M4
1.1	8660	1256	51200	0.9	
1.3	7590	1105	54200	1.05	
1.3	7160	1043	55100	1.1	
1.6	6070	888	56900	1.3	
1.0	9630	1397	41500	0.85	MDR137R77DS80M4 MDRF137R77DS80M4
1.1	8420	1226	52200	0.95	
1.3	7510	1090	54400	1.05	
1.5	6560	951	56100	1.2	
1.7	5670	831	57500	1.4	
1.9	4950	730	58500	1.6	
2.2	4230	629	59300	1.90	
2.5	3830	560	59700	2.1	
2.8	3300	490	60100	2.4	
1.9	4930	717	17300	0.85	MDR107R77DS80M4 MDRF107R77DS80M4
2.3	4150	614	30200	1.05	
2.6	3670	544	32500	1.15	
2.8	3310	492	33900	1.30	
3.3	2810	417	35500	1.55	

n_a [1/min]	M_a [Nm]	i	F_{Ra} [N]	f_B	typ motoreduktora *gearmotor type*
1.1kW					
3.8	2510	369	36200	1.70	MDR107R77DS80M4 MDRF107R77DS80M4
4.3	2200	323	36600	1.95	
4.9	1930	285	36800	2.2	
5.5	1700	253	37100	2.5	
3.2	2990	431	20300	1.00	MDR97R57DS80M4 MDRF97R57DS80M4
3.7	2620	379	23400	1.15	
4.2	2330	336	24900	1.30	
4.7	2050	296	26200	1.45	
5.6	1710	249	27300	1.75	
6.0	1590	234	27500	1.90	
6.7	1430	209	27700	2.1	
5.2	1840	268	11700	0.85	MDR87R57DS80M4 MDRF87R57DS80M4
5.9	1630	236	16400	0.95	
6.7	1430	209	17700	1.10	
5.5	1780	256	15100	0.85	MDR87R57DS80M4 MDRF87R57DS80M4
6.0	1610	232	16500	0.95	
7.2	1370	195	18100	1.15	
2.7	3940	251.15	31300	1.10	MDR107D100L8 MDRF107D100L8
2.9	3610	229.95	32700	1.20	
3.3	3190	203.16	34300	1.35	
3.9	2700	172.34	35800	1.60	
3.6	2920	255.71	21500	1.05	MDR97DS90L6 MDRF97DS90L6
3.8	2750	241.25	22600	1.10	
4.2	2470	216.28	24200	1.20	
4.9	2130	186.30	25900	1.40	
5.5	1920	255.71	26700	1.55	MDR97DS80M4 MDRF97DS80M4
5.8	1810	241.25	27100	1.65	
6.5	1620	216.28	27500	1.85	
7.5	1400	186.30	27800	2.2	
8.2	1280	170.02	27900	2.3	
9.3	1130	150.78	28100	2.7	
11	950	126.75	28300	3.2	
12	870	116.48	28300	3.4	
6.5	1620	216.54	16400	0.95	MDR87DS80M4 MDRF87DS80M4
6.8	1540	205.17	17000	1.00	
7.7	1360	181.77	18100	1.15	
9.0	1170	155.34	19100	1.35	MDR87DS80M4 MDRF87DS80M4
9.8	1070	142.41	19600	1.45	
11	940	124.97	20000	1.65	
12	890	118.43	20000	1.75	
14	780	103.65	20000	2.0	
15	700	93.38	20000	2.2	
17	615	81.92	20000	2.5	
19	545	72.57	20000	2.8	
22	480	63.68	20000	3.2	
23	455	60.35	20000	3.4	
27	395	52.82	20000	3.9	
12	910	121.42	8990	0.90	MDR77DS80M4 MDRF77DS80M4
14	775	102.99	10300	1.05	
15	700	92.97	10900	1.20	

n_a [1/min]	M_a [Nm]	i	F_{Ra} [N]	f_B	typ motoreduktora *gearmotor type*
1.1kW					
17	615	81.80	11500	1.35	MDR77DS80M4 MDRF77DS80M4
18	580	77.24	11700	1.40	
21	495	65.77	12100	1.65	
24	435	57.68	12400	1.90	
27	390	52.07	12500	2.1	
31	345	45.81	12700	2.4	
32	325	43.26	12700	2.5	
38	275	36.83	12900	3.0	
42	250	33.47	12900	3.3	
16	645	86.11	6820	0.95	MDR67DS80M4 MDRF67DS80M4
19	555	74.17	8040	1.10	
20	525	69.75	8370	1.15	
23	460	61.26	8920	1.30	
25	425	56.89	9160	1.40	
27	385	51.56	9420	1.55	
30	345	46.29	9650	1.75	
35	300	39.88	9890	1.95	
37	280	37.50	9970	2.0	
43	240	32.27	10100	2.2	
49	215	28.83	10200	2.4	
50	210	28.13	10200	2.6	MDR67DS80M4 MDRF67DS80M4
52	200	26.72	10100	2.7	
60	176	23.44	9730	3.2	
70	149	19.89	9270	4.0	
20	520	68.23	5990	0.85	MDR57DS80M4 MDRF57DS80M4
22	485	64.85	6850	0.90	
24	430	57.29	6700	1.05	
26	400	53.22	6610	1.15	MDR57DS80M4 MDRF57DS80M4
29	360	48.23	6490	1.25	
32	325	43.30	6350	1.40	
38	280	37.30	6140	1.60	
40	265	35.07	6060	1.70	
46	225	30.18	5850	2.0	
52	200	26.97	5690	2.2	
53	197	26.31	5650	2.3	
56	188	24.99	5580	2.4	
64	165	21.93	5400	2.7	
75	140	18.60	5170	3.2	
83	126	16.79	5030	3.6	
29	360	47.75	3500	0.85	MDR47DS80M4 MDRF47DS80M4
33	320	42.87	4850	0.95	
38	275	36.93	4720	1.10	
40	260	34.73	4660	1.15	
47	225	29.88	4520	1.35	
52	200	26.70	4410	1.50	
59	177	23.59	4290	1.70	
60	175	23.28	4270	1.70	MDR47DS80M4 MDRF47DS80M4
64	164	21.81	4210	1.85	
73	145	19.27	4080	2.0	

n_a [1/min]	M_a [Nm]	i	F_{Ra} [N]	f_B	typ motoreduktora *gearmotor type*
1.1kW					
78	134	17.89	4010	2.2	MDR47DS80M4 MDRF47DS80M4
86	122	16.22	3910	2.3	
96	109	14.56	3800	2.4	
112	94	12.54	3650	2.7	
119	89	11.79	3590	2.8	
138	76	10.15	3450	3.0	
154	68	9.07	3340	3.2	
43	245	32.40	2900	0.80	MDR37DS80M4 MDRF37DS80M4
49	215	28.73	3300	0.95	
57	183	24.42	3720	1.10	
73	145	19.31	3840	1.40	MDR37DS80M4 MDRF37DS80M4
78	135	18.05	3790	1.50	
90	117	15.60	3660	1.70	
106	99	13.25	3520	1.90	MDR37DS80M4 MDRF37DS80M4
118	89	11.83	3430	2.1	
139	76	10.11	3290	2.2	
148	71	9.47	3230	2.3	
176	60	7.97	3090	2.6	
210	50	6.67	2920	2.9	
247	43	5.67	2790	3.3	
277	38	5.06	2700	3.6	
72	145	19.35	2430	0.90	MDR27DS80M4 MDRF27DS80M4
77	136	18.08	2410	0.95	
90	117	15.63	2360	1.10	
105	100	13.28	2290	1.30	
118	89	11.86	2240	1.45	
138	76	10.13	2160	1.60	
172	61	8.16	2010	1.90	
184	57	7.63	1980	1.95	
212	50	6.59	1920	2.1	
250	42	5.60	1840	2.4	
280	38	5.00	1790	2.5	
328	32	4.27	1720	2.7	
350	30	4.00	1690	2.8	
415	25	3.37	1610	3.1	
203	52	13.28	1980	2.5	MDR27DS80M2 MDRF27DS80M2
228	46	11.86	1920	2.8	
267	39	10.13	1840	3.1	
287	37	9.41	1780	3.3	
331	32	8.16	1720	3.7	
354	30	7.63	1690	3.8	
410	26	6.59	1620	4.1	
482	22	5.60	1550	4.5	
540	20	5.00	1500	4.9	
632	17	4.27	1430	5.2	
675	16	4.00	1410	5.4	
801	13	3.37	1340	6.0	

n_a [1/min]	M_a [Nm]	i	F_{Ra} [N]	f_B	typ motoreduktora *gearmotor type*
1.1kW					
137	77	19.71	1150	1.10	MDR17DS80M2 MDRF17DS80M2
159	66	16.99	1140	1.30	
170	62	15.84	1140	1.40	
195	54	13.84	1120	1.60	
208	51	12.98	1120	1.70	
236	45	11.45	1100	1.80	
266	40	10.15	1080	1.95	
313	34	8.63	1050	2.1	
358	29	7.55	970	1.90	
384	27	7.04	960	2.0	
439	24	6.15	940	2.3	
468	22	5.76	930	2.4	
531	20	5.09	910	2.6	
599	18	4.51	880	2.7	
704	15	3.83	850	3.0	
249	42	5.63	5680	2.6	MDRX77DS80M4 MDRXF77DS80M4
262	40	5.35	5590	2.6	
296	36	4.73	5380	3.5	
203	52	4.53	4130	1.60	MDRX67DS90L6 MDRXF67DS90L6
214	49	4.30	4070	1.65	
244	43	3.77	3920	2.0	
309	34	4.53	3660	2.4	MDRX67DS80M4 MDRXF67DS80M4
326	32	4.30	3610	2.5	
371	28	3.77	3470	3.1	
438	24	3.20	3300	4.2	
485	22	2.89	3200	4.9	
551	19	2.54	3070	6.2	
583	18	2.40	3020	6.8	
685	15	2.04	2870	8.8	
754	14	1.86	2780	9.1	
870	12	1.61	2660	9.4	
1000	11	1.40	2550	9.9	
243	43	3.79	3120	1.60	MDRX57DS90L6 MDRXF57DS90L6
259	41	3.55	3060	1.70	
293	36	3.14	2960	1.80	
316	33	2.91	2900	2.0	
348	30	2.64	2820	2.3	
369	28	3.79	2780	2.4	MDRX57DS80M4 MDRXF57DS80M4
394	27	3.55	2730	2.6	
446	24	3.14	2630	2.8	
481	22	2.91	2570	3.1	
530	20	2.64	2500	3.5	
591	18	2.37	2420	3.9	
686	15	2.04	2310	4.5	
729	14	1.92	2270	4.8	
847	12	1.65	2160	5.6	
948	11	1.48	2090	6.1	
1075	9.8	1.30	2010	6.4	

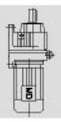

n_a [1/min]	M_a [Nm]	i	F_{Ra} [N]	f_B	typ motoreduktora *gearmotor type*
1.5kW					
0.23	54728	6035	190000	0.91	MDR187R97DS90M4
0.26	48599	5359	190000	1.03	
0.29	43457	4792	190000	1.15	
0.32	39073	4308	190000	1.28	
0.37	33913	3739	190000	1.47	
0.43	29938	3228	190000	1.67	
0.51	25398	2738	190000	1.97	
0.55	23381	2521	190000	2.14	
0.37	34011	3750	150000	0.94	MDR177R97DS90M4
0.45	27752	3060	150000	1.15	
0.68	19071	2056	150000	1.68	
0.73	17556	1893	150000	1.82	
0.89	14504	1564	150000	2.21	
0.60	21400	2333	120000	0.85	MDR167R97DS90M4 MDRF167R97DS90M4
0.68	19000	2085	120000	0.95	
0.75	17000	1877	120000	1.05	
0.84	15100	1670	120000	1.20	
0.98	13300	1438	120000	1.35	
1.1	11800	1279	120000	1.55	
1.3	10300	1123	120000	1.75	
1.4	9180	999	120000	1.95	
3.3	3920	426	73600	3.3	MDR147R87DS90M4 MDRF147R87DS90M4
3.8	3380	368	73800	3.8	
0.83	15900	1705	37900	0.85	MDR147R77DS90M4 MDRF147R77DS90M4
0.92	14300	1536	58600	0.90	
1.1	12400	1329	63900	1.05	
1.2	10800	1166	66500	1.20	
1.4	9530	1029	68400	1.35	
1.6	8250	889	70000	1.60	
1.8	7260	784	71100	1.80	
2.0	6420	695	71900	2.0	
2.3	5780	619	72400	2.3	
2.5	5200	558	72800	2.5	
1.4	9770	1043	38800	0.80	MDR137R77DS90M4 MDRF137R77DS90M4
1.6	8290	888	52700	0.95	
2.0	6500	699	56200	1.25	
2.3	5640	609	57600	1.45	
1.3	10200	1090	26100	0.80	MDR137R77DS90M4 MDRF137R77DS90M4
1.5	8940	951	49900	0.90	
1.7	7750	831	53900	1.05	
1.9	6770	730	55800	1.20	
2.2	5800	629	57300	1.40	
2.5	5230	560	58100	1.55	
2.9	4530	490	59000	1.75	

n_a [1/min]	M_a [Nm]	i	F_{Ra} [N]	f_B	typ motoreduktora *gearmotor type*
1.5kW					
3.3	3950	428	59600	2.0	MDR137R77DS90M4 MDRF137R77DS90M4
3.7	3560	381	59900	2.3	
4.4	3020	323	60300	2.7	
2.7	4900	528	18500	0.90	MDR107R77DS90M4 MDRF107R77DS90M4
2.6	5030	544	10400	0.85	MDR107R77DS90M4 MDRF107R77DS90M4
2.9	4550	492	28100	0.95	
3.4	3850	417	31700	1.1	
3.8	3440	369	33400	1.25	
4.4	3000	323	34900	1.45	
3.0	4470	469	28500	0.95	MDR107R77DS90M4 MDRF107R77DS90M4
4.2	3170	336	11300	0.95	MDR97R57DS90M4 MDRF97R57DS90M4
4.8	2790	296	22400	1.10	
5.7	2330	249	24900	1.30	
6.0	2180	234	25600	1.40	
6.8	1950	209	26600	1.55	
3.0	4710	229.95	26500	0.90	MDR107D112M8 MDRF107D112M8
3.5	4160	203.16	30200	1.05	
4.1	3530	172.34	33100	1.20	
4.4	3250	158.68	34100	1.30	
3.7	3910	251.15	31400	1.10	MDR107DS100M6 MDRF107DS100M6
4.0	3580	229.95	32900	1.20	
4.5	3160	203.16	34400	1.35	
5.3	2680	172.34	35900	1.60	
5.8	2470	158.68	36200	1.75	
6.5	2210	141.83	36500	1.95	
5.5	2600	255.71	23500	1.15	MDR97DS90M4 MDRF97DS90M4
5.8	2450	241.25	24300	1.20	
6.5	2200	216.28	25600	1.35	
7.6	1890	186.30	26800	1.60	
8.3	1730	170.02	27300	1.75	
9.4	1530	150.78	27600	1.95	
11	1290	126.75	27900	2.3	
12	1180	116.48	28000	2.5	
14	1050	103.44	28200	2.9	
15	940	92.48	28300	3.2	
7.8	1850	181.77	11400	0.85	MDR87DS90M4 MDRF87DS90M4
9.1	1580	155.34	16700	1.00	
9.9	1450	142.41	17600	1.05	
11	1270	124.97	18600	1.20	
12	1200	118.43	19000	1.30	
14	1050	103.65	19600	1.45	
15	950	93.38	20000	1.65	MDR87DS90M4 MDRF87DS90M4
17	830	81.92	20000	1.85	
19	735	72.57	20000	2.1	
22	645	63.68	20000	2.4	
23	615	60.35	20000	2.5	
27	535	52.82	20000	2.9	

n_a [1/min]	M_a [Nm]	i	F_{Ra} [N]	f_B	typ motoreduktora *gearmotor type*
1.5kW					
30	485	47.58	20000	3.2	MDR87DS90M4 MDRF87DS90M4
34	425	41.74	20000	3.7	
38	375	36.84	19600	4.1	
15	940	92.97	8500	0.85	MDR77DS90M4 MDRF77DS90M4
17	830	81.80	9820	1.00	
18	785	77.24	10200	1.05	
21	670	65.77	11100	1.25	
24	585	57.68	11600	1.40	MDR77DS90M4 MDRF77DS90M4
27	530	52.07	11900	1.55	
31	465	45.81	12200	1.75	
33	440	43.26	12300	1.85	
38	375	36.83	12600	2.2	
42	340	33.47	12700	2.4	
49	295	29.00	12500	2.8	
56	255	25.23	12000	3.0	
60	240	23.37	11800	3.5	MDR77DS90M4 MDRF77DS90M4
66	220	21.43	11500	3.8	
75	191	18.80	11000	4.1	
23	620	61.26	7280	0.95	MDR67DS90M4 MDRF67DS90M4
25	580	56.89	7810	1.05	
27	525	51.56	8370	1.15	
30	470	46.29	8830	1.30	
35	405	39.88	9300	1.45	
38	380	37.50	9460	1.50	
44	330	32.27	9750	1.65	
49	295	28.83	9920	1.80	
50	285	28.13	9950	1.90	MDR67DS90M4 MDRF67DS90M4
53	270	26.72	9850	2.0	
60	240	23.44	9500	2.4	
71	200	19.89	9070	3.0	
79	182	17.95	8810	3.2	
27	540	53.22	5140	0.85	MDR57DS90M4 MDRF57DS90M4
29	490	48.23	6010	0.90	
33	440	43.30	5920	1.00	
38	380	37.30	5770	1.20	MDR57DS90M4 MDRF57DS90M4
40	355	35.07	5710	1.25	
47	305	30.18	5540	1.45	
52	275	26.97	5420	1.65	
54	265	26.31	5390	1.70	MDR57DS90M4 MDRF57DS90M4
56	255	24.99	5330	1.75	
64	225	21.93	5170	2.0	
76	189	18.60	4980	2.4	
84	171	16.79	4850	2.6	
95	150	14.77	4700	2.9	
101	142	13.95	4630	3.0	
119	121	11.88	4440	3.4	
38	375	36.93	2380	0.80	MDR47DS90M4 MDRF47DS90M4
41	355	34.73	3840	0.85	

n_a [1/min]	M_a [Nm]	i	F_{Ra} [N]	f_B	typ motoreduktora *gearmotor type*
1.5kW					
47	305	29.88	4220	1.00	MDR47DS90M4 MDRF47DS90M4
53	270	26.70	4140	1.10	
60	240	23.59	4050	1.25	
61	235	23.28	4040	1.25	MDR47DS90M4 MDRF47DS90M4
65	220	21.81	3990	1.35	
73	196	19.27	3890	1.50	
79	182	17.89	3830	1.60	
87	165	16.22	3740	1.65	
97	148	14.56	3650	1.80	
112	127	12.54	3520	1.95	
120	120	11.79	3470	2.1	
139	103	10.15	3340	2.2	
155	92	9.07	3240	2.4	
176	81	8.01	3140	2.5	
182	79	7.76	3060	2.1	
203	71	6.96	2980	2.3	
235	61	6.00	2860	2.6	
250	57	5.64	2810	2.7	
291	49	4.85	2700	3.0	
325	44	4.34	2610	3.3	
368	39	3.83	2520	3.7	
73	196	19.31	2660	1.00	MDR37DS90M4 MDRF37DS90M4
78	183	18.05	2840	1.10	
90	159	15.60	3160	1.25	
106	135	13.25	3350	1.40	MDR37DS90M4 MDRF37DS90M4
119	120	11.83	3270	1.50	
140	103	10.11	3160	1.65	
149	96	9.47	3110	1.75	
177	81	7.97	2980	1.95	
211	68	6.67	2820	2.1	
249	58	5.67	2710	2.5	
279	51	5.06	2630	2.6	
326	44	4.32	2520	2.9	
348	41	4.05	2470	3.0	
414	35	3.41	2360	3.2	
211	68	13.25	2850	2.8	MDR37DS90M2 MDRF37DS90M2
237	61	11.83	2770	3.0	
277	52	10.11	2650	3.3	
296	48	9.47	2610	3.5	
351	41	7.97	2480	3.8	
90	159	15.63	1700	0.80	MDR27DS90M4 MDRF27DS90M4
106	135	13.28	2020	0.95	
119	121	11.86	2080	1.05	
139	103	10.13	2030	1.20	
173	83	8.16	1880	1.40	
185	78	7.63	1860	1.45	
214	67	6.59	1810	1.60	

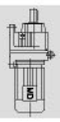

n_a [1/min]	M_a [Nm]	i	F_{Ra} [N]	f_B	typ motoreduktora *gearmotor type*
1.5kW					
252	57	5.60	1750	1.75	MDR27DS90M4 MDRF27DS90M4
282	51	5.00	1710	1.85	
330	43	4.27	1650	2.0	
353	41	4.00	1630	2.1	
418	34	3.37	1560	2.3	
236	61	11.86	1820	2.1	MDR27DS90M2 MDRF27DS90M2
276	52	10.13	1760	2.4	
343	42	8.16	1640	2.8	
367	39	7.63	1610	2.9	
425	34	6.59	1550	3.2	
500	29	5.60	1490	3.5	
560	26	5.00	1450	3.7	
656	22	4.27	1390	4.0	
700	21	4.00	1360	4.2	
831	17	3.37	1300	4.6	
250	57	5.63	5580	1.90	MDRX77DS90M4 MDRXF77DS90M4
264	54	5.35	5490	1.90	
298	48	4.73	5300	2.6	
349	41	4.04	5050	3.5	
381	38	3.70	4920	4.1	
434	33	3.25	4720	5.5	
458	31	3.08	4650	6.2	
523	27	2.70	4460	7.9	
581	25	2.43	4310	8.7	
312	46	4.53	3570	1.80	MDRX67DS90M4 MDRXF67DS90M4
328	44	4.30	3520	1.85	
374	38	3.77	3390	2.3	
441	33	3.20	3230	3.1	
488	29	2.89	3140	3.6	
555	26	2.54	3020	4.6	
588	24	2.40	2970	5.0	
690	21	2.04	2820	6.4	
759	19	1.86	2740	6.7	
876	16	1.61	2620	7.0	
1005	14	1.40	2510	7.3	
372	39	3.79	2700	1.80	MDRX57DS90M4 MDRXF57DS90M4
397	36	3.55	2650	1.90	
450	32	3.14	2560	2.0	
484	30	2.91	2510	2.3	
534	27	2.64	2440	2.6	
595	24	2.37	2360	2.9	
691	21	2.04	2260	3.3	
734	20	1.92	2220	3.5	
853	17	1.65	2120	4.1	
955	15	1.48	2050	4.5	
1080	13	1.30	1980	4.7	
2.2kW					
0.33	56494	4308	190000	0.89	MDR187R97DS90L4
0.38	49033	3739	190000	1.02	

n_a [1/min]	M_a [Nm]	i	F_{Ra} [N]	f_B	typ motoreduktora *gearmotor type*
2.2kW					
0.44	43286	3228	190000	1.16	MDR187R97DS90L4
0.51	36722	2738	190000	1.36	
0.56	33805	2521	190000	1.48	
0.63	30213	2253	190000	1.65	
0.70	27201	2028	190000	1.84	
0.77	24635	1837	190000	2.03	
0.87	21839	1628	190000	2.29	
0.56	32970	2514	150000	0.97	MDR177R97DS90L4
0.69	27574	2056	150000	1.16	
0.74	25383	1893	150000	1.26	
0.90	20970	1564	150000	1.53	
0.98	19304	1439	150000	1.66	
1.15	16398	1223	150000	1.95	
1.34	14068	1049	150000	2.27	
0.84	22600	1670	120000	0.80	MDR167R97DS90L4 MDRF167R97DS90L4
0.98	19700	1438	120000	0.90	
1.1	17500	1279	120000	1.05	
1.3	15300	1123	120000	1.15	
1.4	13600	999	120000	1.30	
1.6	11800	861	120000	1.55	
1.9	10400	760	120000	1.75	
2.1	8730	656	120000	2.1	
2.6	7200	533	71100	1.80	MDR147R87DS90L4 MDRF147R87DS90L4
3.1	6190	462	72100	2.1	
3.3	5820	426	72400	2.2	
3.8	5030	368	72900	2.6	
4.3	4450	326	73300	2.9	
1.2	16000	1166	36000	0.80	MDR147R77DS90L4 MDRF147R77DS90L4
1.4	14100	1029	60300	0.9	
1.6	12200	889	64200	1.05	
1.8	10800	784	66600	1.20	
2.0	9520	695	68500	1.35	
2.3	8550	619	69700	1.5	
2.5	7690	558	70600	1.70	
2.9	6730	489	71600	1.95	
2.0	9620	699	41800	0.85	MDR137R77DS90L4 MDRF137R77DS90L4
2.3	8350	609	52500	0.95	
1.9	10000	730	33300	0.80	MDR137R77DS90L4 MDRF137R77DS90L4
2.2	8610	629	51400	0.95	
2.5	7730	560	54000	1.05	
2.9	6720	490	55900	1.20	
3.3	5860	428	57200	1.35	
3.7	5260	381	58100	1.5	
4.4	4460	323	59000	1.80	
4.8	4020	291	59500	2.0	
5.5	3510	255	59900	2.3	
6.3	3070	223	60300	2.6	

n_a [1/min]	M_a [Nm]	i	F_{Ra} [N]	f_B	typ motoreduktora *gearmotor type*
2.2kW					
3.8	5010	369	12100	0.85	MDR107R77DS90L4 MDRF107R77DS90L4
4.4	4450	323	28600	0.95	
4.9	3920	285	31400	1.10	
5.6	3470	253	33300	1.25	
6.6	2940	214	35100	1.45	
4.3	4540	325	28100	0.95	MDR107R77DS90L4 MDRF107R77DS90L4
6.0	3170	234	11300	0.95	MDR97R57DS90L4 MDRF97R57DS90L4
6.8	2880	209	21800	1.05	
3.1	6680	222.60	55900	1.20	MDR137D132S8 MDRF137D132S8
3.7	5660	188.45	57500	1.40	
4.0	5230	174.40	58100	1.55	
4.5	4690	156.31	58800	1.70	
5.0	4240	141.12	59300	1.90	
5.5	3850	128.18	59600	2.1	MDR137D132S8 MDRF137D132S8
6.2	3410	113.72	60000	2.3	
6.8	3100	103.20	60300	2.6	
4.6	4540	203.16	28100	0.95	MDR107DS100L6 MDRF107DS100L6
5.4	3850	172.34	31700	1.10	
5.9	3550	158.68	33000	1.20	
6.6	3170	141.83	34400	1.35	
5.6	3740	251.15	32200	1.15	MDR107DS90L4 MDRF107DS90L4
6.1	3430	229.95	33500	1.25	
6.9	3030	203.16	34900	1.40	
8.2	2570	172.34	36100	1.65	MDR107DS90L4 MDRF107DS90L4
8.9	2360	158.68	36300	1.80	
9.9	2110	141.83	36600	2.0	
11	1900	127.68	36900	2.3	
12	1720	115.63	37000	2.5	
14	1530	102.53	37200	2.8	
15	1380	92.70	37300	3.1	
6.5	3220	216.28	17030	0.95	MDR97DS90L4 MDRF97DS90L4
7.6	2780	186.30	22500	1.10	
8.3	2530	170.02	23900	1.20	
9.4	2250	150.78	25300	1.35	MDR97DS90L4 MDRF97DS90L4
11	1890	126.75	26800	1.60	
12	1740	116.48	27300	1.75	
14	1540	103.44	27600	1.95	
15	1380	92.48	27800	2.2	
17	1240	83.15	28000	2.4	
20	1080	72.17	28200	2.8	
22	970	65.21	27700	3.1	
24	890	59.92	27000	3.4	
27	795	53.21	26100	3.8	
30	710	47.58	25300	4.2	

n_a [1/min]	M_a [Nm]	i	F_{Ra} [N]	f_B	typ motoreduktora *gearmotor type*
2.2kW					
11	1860	124.97	10100	0.85	MDR87DS90L4 MDRF87DS90L4
12	1760	118.43	15200	0.90	
14	1540	103.65	17000	1.00	
15	1390	93.38	17900	1.10	
17	1220	81.92	18900	1.25	
19	1080	72.57	19500	1.45	MDR87DS90L4 MDRF87DS90L4
22	950	63.68	20000	1.65	
23	900	60.35	20000	1.70	
27	785	52.82	20000	1.95	
30	710	47.58	20000	2.2	
34	620	41.74	19900	2.5	
38	550	36.84	19200	2.8	
43	485	32.66	18500	3.2	
41	515	34.40	18800	2.9	MDR87DS90L4 MDRF87DS90L4
45	470	31.40	18300	3.3	
51	415	27.84	17700	3.7	
60	350	23.40	16800	4.5	
66	320	21.51	16400	4.7	
21	980	65.77	5470	0.85	MDR77DS90L4 MDRF77DS90L4
24	860	57.68	9540	0.95	
27	775	52.07	10300	1.05	
31	685	45.81	11000	1.20	
33	645	43.26	11300	1.25	MDR77DS90L4 MDRF77DS90L4
38	550	36.83	11800	1.50	
42	500	33.47	12100	1.65	
49	430	29.00	12100	1.90	
56	375	25.23	11700	2.1	
60	350	23.37	11400	2.4	MDR77DS90L4 MDRF77DS90L4
66	320	21.43	11200	2.6	
75	280	18.80	10800	2.8	
79	265	17.82	10600	2.9	
90	230	15.60	10200	3.2	
100	210	14.05	9910	3.4	
35	595	39.88	7630	1.00	MDR67DS90L4 MDRF67DS90L4
38	560	37.50	8020	1.00	
44	480	32.27	8750	1.10	
49	430	28.83	9140	1.20	
60	350	23.44	9140	1.60	MDR67DS90L4 MDRF67DS90L4
71	295	19.89	8760	2.0	
79	270	17.95	8530	2.2	
89	235	15.79	8240	2.4	
95	220	14.91	8110	2.5	
111	189	12.70	7760	2.8	
122	172	11.54	7560	2.9	
141	149	10.00	7250	3.2	
162	130	8.70	6960	3.4	
181	116	7.79	6760	3.3	

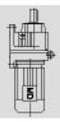

n_a [1/min]	M_a [Nm]	i	F_{Ra} [N]	f_B	typ motoreduktora *gearmotor type*
2.2kW					
38	555	37.30	4490	0.80	MDR57DS90L4 MDRF57DS90L4
40	525	35.07	5110	0.85	
47	450	30.18	5030	1.00	
52	400	26.97	4960	1.10	
64	325	21.93	4800	1.40	MDR57DS90L4 MDRF57DS90L4
76	275	18.60	4660	1.60	
84	250	16.79	4570	1.80	
95	220	14.77	4450	2.0	
101	210	13.95	4390	2.1	
119	177	11.88	4230	2.3	
131	161	10.79	4140	2.4	
151	139	9.35	4000	2.7	
156	135	9.06	3980	2.8	
177	119	7.97	3850	3.0	
107	197	26.31	4340	2.3	MDR57DS90L2 MDRF57DS90L2
112	187	24.99	4290	2.4	
128	164	21.93	4160	2.8	
151	139	18.60	3990	3.2	
167	126	16.79	3890	3.6	
190	111	14.77	3760	3.9	
201	104	13.95	3710	4.1	
73	285	19.27	3550	1.05	MDR47DS90L4 MDRF47DS90L4
87	240	16.22	3460	1.15	
97	215	14.56	3400	1.20	
112	187	12.54	3310	1.35	
120	176	11.79	3270	1.40	
139	151	10.15	3160	1.50	
155	135	9.07	3090	1.65	
176	119	8.01	3000	1.70	
182	116	7.76	2910	1.40	
203	104	6.96	2840	1.55	
235	89	6.00	2740	1.75	
250	84	5.64	2700	1.85	
291	72	4.85	2600	2.1	
325	65	4.34	2530	2.3	
368	57	3.83	2440	2.5	
121	174	23.28	3260	1.70	MDR47DS90L2 MDRF47DS90L2
129	163	21.81	3220	1.85	
146	144	19.27	3130	2.1	
157	134	17.89	3080	2.2	
173	121	16.22	3010	2.3	
193	109	14.56	2930	2.4	
224	94	12.54	2830	2.7	
238	88	11.79	2780	2.8	
277	76	10.15	2680	3.0	
310	68	9.07	2600	3.2	
351	60	8.01	2510	3.4	

n_a [1/min]	M_a [Nm]	i	F_{Ra} [N]	f_B	typ motoreduktora *gearmotor type*
2.2kW					
90	230	15.60	1070	0.85	MDR37DS90L4 MDRF37DS90L4
106	198	13.25	1660	0.95	
119	176	11.83	1990	1.05	
140	151	10.11	2360	1.15	MDR37DS90L4 MDRF37DS90L4
149	141	9.47	2480	1.20	
177	119	7.97	2750	1.30	
211	99	6.67	2470	1.45	
249	84	5.67	2570	1.70	
279	75	5.06	2500	1.80	
326	64	4.32	2410	1.95	
348	60	4.05	2370	2.0	
414	51	3.41	2270	2.2	
146	144	19.31	2440	1.4	MDR37DS90L2 MDRF37DS90L2
156	135	18.05	2560	1.5	
180	117	15.60	2780	1.7	
212	99	13.25	2700	1.9	MDR37DS90L2 MDRF37DS90L2
237	89	11.83	2630	2.1	
278	76	10.11	2540	2.3	
297	71	9.47	2500	2.4	
352	60	7.97	2390	2.6	
421	50	6.67	2260	2.9	
496	42	5.67	2170	3.4	
555	38	5.06	2100	3.6	
650	32	4.32	2010	3.9	
694	30	4.05	1980	4.0	
824	26	3.41	1880	4.4	
139	151	10.13	1120	0.80	MDR27DS90L4 MDRF27DS90L4
214	98	6.59	1130	1.10	
252	83	5.60	1390	1.20	
282	75	5.00	1540	1.30	
330	64	4.27	1540	1.35	
353	60	4.00	1520	1.45	
418	50	3.37	1470	1.55	
212	99	13.28	1710	1.3	MDR27DS90L2 MDRF27DS90L2
237	89	11.86	1680	1.45	
277	76	10.13	1640	1.6	
344	61	8.16	1520	1.9	
369	57	7.63	1500	1.95	
426	49	6.59	1460	2.2	
502	42	5.60	1410	2.4	
562	37	5.00	1380	2.5	
658	32	4.27	1330	2.7	
703	30	4.00	1310	2.8	
834	25	3.37	1250	3.1	
298	70	4.73	5180	1.75	MDRX77DS90L4 MDRXF77DS90L4
349	60	4.04	4950	2.4	
381	55	3.70	4820	2.8	

n_a [1/min]	M_a [Nm]	i	F_{Ra} [N]	f_B	typ motoreduktora *gearmotor type*
2.2kW					
434	48	3.25	4640	3.8	MDRX77DS90L4 MDRXF77DS90L4
458	46	3.08	4560	4.2	
523	40	2.70	4380	5.4	
581	36	2.43	4250	5.9	
662	32	2.13	4080	6.3	
750	28	1.88	3920	6.7	
846	25	1.67	3780	7.0	
991	21	1.42	3590	7.3	
374	56	3.77	3280	1.55	MDRX67DS90L4 MDRXF67DS90L4
441	48	3.20	3130	2.1	
488	43	2.89	3050	2.5	
555	38	2.54	2940	3.1	
588	36	2.40	2890	3.4	
690	30	2.04	2760	4.4	
759	28	1.86	2680	4.6	
876	24	1.61	2570	4.8	
1005	21	1.40	2460	5.0	
450	47	3.14	2450	1.40	MDRX57DS90L4 MDRXF57DS90L4
534	39	2.64	2340	1.75	
595	35	2.37	2280	1.95	
691	30	2.04	2190	2.3	
734	29	1.92	2150	2.4	
853	25	1.65	2060	2.8	
955	22	1.48	1990	3.1	
1080	19	1.30	1930	3.3	
3.0kW					
0.51	50076	2738	190000	1.00	MDR187R97DS100M4
0.56	46098	2521	190000	1.08	
0.63	41199	2253	190000	1.21	
0.70	37092	2028	190000	1.35	
0.77	33593	1837	190000	1.49	
0.87	29780	1628	190000	1.68	
0.98	26254	1436	160000	1.90	
1.13	22819	1248	190000	2.19	
0.90	28596	1564	150000	1.12	MDR177R97DS100M4
0.98	26324	1439	150000	1.22	
1.15	22361	1223	150000	1.43	
1.34	19183	1049	150000	1.67	
1.50	17134	937	150000	1.87	
1.68	15376	841	150000	2.08	
2.01	12847	703	150000	2.49	
1.2	21200	1123	12000	0.85	MDR167R97DS100M4 MDRF167R97DS100M4
1.4	18900	999	12000	0.95	
1.6	16300	861	12000	1.10	
1.8	14400	760	12000	1.25	
2.1	12200	656	12000	1.50	
2.8	9330	503	12000	1.95	

n_a [1/min]	M_a [Nm]	i	F_{Ra} [N]	f_B	typ motoreduktora *gearmotor type*
3.0kW					
2.6	9990	533	68000	1.30	MDR147R87DS100M4 MDRF147R87DS100M4
3.0	8610	462	69700	1.50	
3.3	8060	426	70400	1.6	
3.8	6960	368	71500	1.85	
4.3	6150	326	72200	2.1	
5.0	5230	280	72800	2.5	
1.6	16900	889	21900	0.75	MDR147R77DS100M4 MDRF147R77DS100M4
1.8	14900	784	52000	0.85	
2.0	13200	695	62300	1.00	
2.3	11800	619	64900	1.10	
2.5	10600	558	66900	1.2	
2.8	9280	490	48100	0.85	MDR137R77DS100M4 MDRF137R77DS100M4
3.3	8100	428	53200	1.00	
3.7	7260	381	54900	1.10	
4.3	6160	323	56800	1.30	
4.8	5540	291	57700	1.45	
5.5	4840	255	58600	1.65	
6.3	4240	223	59300	1.90	
2.7	9990	517	34100	0.80	MDR137R77DS100M4 MDRF137R77DS100M4
3.1	8760	453	50700	0.9	
5.5	4790	253	23500	0.90	MDR107R77DS100M4 MDRF107R77DS100M4
6.5	4060	214	30700	1.05	
7.5	3550	187	33000	1.2	
5.5	4930	256	17400	0.85	MDR107R77DS100M4 MDRF107R77DS100M4
3.2	8860	222.60	50300	0.90	MDR137D132M8 MDRF137D132M8
3.8	7500	188.45	54400	1.05	
4.1	6940	174.40	55500	1.15	
4.6	6220	156.31	56700	1.30	
5.1	5620	141.12	57600	1.40	
5.6	5100	128.18	58300	1.55	MDR137D132M8 MDRF137D132M8
6.3	4520	113.72	59000	1.75	
7.0	4110	103.20	59400	1.95	
8.1	3530	88.70	59900	2.3	
4.2	6780	222.60	55800	1.20	MDR137DS112M6 MDRF137DS112M6
5.0	5740	188.45	57400	1.40	
5.4	5320	174.40	58000	1.50	
6.0	4760	156.31	58700	1.70	
6.7	4300	141.12	59200	1.85	
7.3	3910	128.18	59600	2.1	MDR137DS112M6 MDRF137DS112M6
8.3	3470	113.72	60000	2.3	
9.1	3150	103.20	60200	2.5	
5.9	4840	158.68	21600	0.90	MDR107DS112M6 MDRF107DS112M6
6.6	4320	141.83	29300	1.00	
7.4	3890	127.68	31500	1.10	
6.1	4710	229.95	26500	0.90	MDR107DS100M4 MDRF107DS100M4
6.9	4160	203.16	30200	1.05	
8.1	3530	172.34	33100	1.20	
8.8	3250	158.68	34100	1.30	

n_a [1/min]	M_a [Nm]	i	F_{Ra} [N]	f_B	typ motoreduktora *gearmotor type*
3.0kW					
9.9	2900	141.83	35300	1.50	MDR107DS100M4 MDRF107DS100M4
11	2610	127.68	36000	1.65	
12	2370	115.63	36300	1.80	
14	2100	102.53	36700	2.1	
15	1900	92.70	36900	2.3	
18	1610	78.57	35900	2.7	
19	1490	72.88	35200	2.9	
9.3	3090	150.78	16200	0.95	MDR97DS100M4 MDRF97DS100M4
11	2590	126.75	23600	1.15	
12	2380	116.48	24700	1.25	
14	2120	103.44	25900	1.40	
15	1890	92.48	26800	1.60	
17	1700	83.15	27300	1.75	
19	1480	72.17	27700	2.0	
21	1330	65.21	27000	2.3	
23	1230	59.92	26400	2.5	
26	1090	53.21	25600	2.8	
29	970	47.58	24800	3.1	
33	880	42.78	24000	3.4	
38	760	37.13	21300	4.0	
42	680	33.25	22400	4.3	
15	1910	93.38	13630	0.80	MDR87DS100M4 MDRF87DS100M4
17	1680	81.92	16000	0.90	
19	1490	72.57	17400	1.05	
22	1300	63.68	18400	1.20	
23	1230	60.35	18800	1.25	MDR87DS100M4 MDRF87DS100M4
27	1080	52.82	19500	1.45	
29	970	47.58	19900	1.60	
34	850	41.74	19400	1.80	
38	755	36.84	18700	2.1	
43	670	32.66	18100	2.3	
50	570	27.88	17400	2.6	
41	705	34.40	18400	2.1	MDR87DS100M4 MDRF87DS100M4
45	640	31.40	17900	2.4	
50	570	27.84	17400	2.7	
60	480	23.40	16500	3.2	
65	440	21.51	16100	3.4	
73	390	19.10	15600	3.7	
82	350	17.08	15100	4.0	
91	315	15.35	14600	4.3	
31	940	45.81	8670	0.85	MDR77DS100M4 MDRF77DS100M4
32	890	43.26	9270	0.95	
38	755	36.83	10500	1.10	
42	685	33.47	11000	1.20	
48	595	29.00	11600	1.40	MDR77DS100M4 MDRF77DS100M4
55	515	25.23	11300	1.50	
60	480	23.37	11100	1.70	MDR77DS100M4 MDRF77DS100M4
65	440	21.43	10800	1.85	

n_a [1/min]	M_a [Nm]	i	F_{Ra} [N]	f_B	typ motoreduktora *gearmotor type*
3.0kW					
74	385	18.80	10500	2.0	MDR77DS100M4 MDRF77DS100M4
79	365	17.82	10300	2.1	
90	320	15.60	9980	2.3	
100	290	14.05	9700	2.5	
114	250	12.33	9350	2.7	
129	225	10.88	9030	3.0	
145	197	9.64	8720	3.2	
163	176	8.59	8500	3.6	
181	158	7.74	8240	3.9	
206	139	6.79	7920	4.2	
60	480	23.44	8730	1.15	MDR67DS100M4 MDRF67DS100M4
70	405	19.89	8420	1.45	
78	365	17.95	8230	1.60	
89	325	15.79	7980	1.75	
94	305	14.91	7860	1.80	
110	260	12.70	7550	2.0	
121	235	11.54	7360	2.1	
140	205	10.00	7090	2.3	
52	550	26.97	4330	0.80	MDR57DS100M4 MDRF57DS100M4
64	450	21.93	4380	1.00	MDR57DS100M4 MDRF57DS100M4
75	380	18.60	4300	1.20	
83	345	16.79	4250	1.30	
95	300	14.77	4160	1.45	MDR57DS100M4 MDRF57DS100M4
100	285	13.95	4130	1.50	
118	245	11.88	4010	1.65	
130	220	10.79	3940	1.75	
150	191	9.35	3820	1.95	
155	185	9.06	3810	2.0	
176	163	7.97	3700	2.2	
186	154	7.53	3650	2.3	
218	131	6.41	3520	2.6	
240	119	5.82	3430	2.7	
277	103	5.05	3310	3.0	
319	90	4.39	3190	3.1	
128	225	21.93	3950	2.0	MDR57DS100M2 MDRF57DS100M2
151	190	18.60	3820	2.4	
167	172	16.79	3730	2.6	
190	151	14.77	3620	2.9	
201	143	13.95	3570	3.0	
236	122	11.88	3440	3.3	
259	110	10.79	3360	3.5	
86	330	16.22	2030	0.85	MDR47DS100M4 MDRF47DS100M4
96	300	14.56	2500	0.90	
112	255	12.54	3040	0.95	
119	240	11.79	3040	1.00	MDR47DS100M4 MDRF47DS100M4
138	210	10.15	2970	1.10	

n_a [1/min]	M_a [Nm]	i	F_{Ra} [N]	f_B	typ motoreduktora *gearmotor type*
3.0kW					
154	186	9.07	2910	1.20	MDR47DS100M4 MDRF47DS100M4
175	164	8.01	2840	1.25	
181	159	7.76	2740	1.05	
201	143	6.96	2680	1.10	
233	123	6.00	2610	1.25	
248	115	5.64	2580	1.35	
288	99	4.85	2490	1.50	
323	89	4.34	2430	1.65	
365	78	3.83	2360	1.85	
237	121	11.79	2670	2.0	MDR47DS100M2 MDRF47DS100M2
276	104	10.15	2580	2.2	
309	93	9.07	2510	2.4	
349	82	8.01	2430	2.5	
361	79	7.76	2370	2.1	
402	71	6.96	2310	2.2	
467	61	6.00	2220	2.5	
496	58	5.64	2190	2.7	
577	50	4.85	2100	3.0	
646	44	4.34	2040	3.3	
731	39	3.83	1970	3.7	
139	205	10.11	780	0.80	MDR37DS100M4 MDRF37DS100M4
148	194	9.47	1010	0.85	
176	163	7.97	1510	0.95	
210	137	6.67	1250	1.05	MDR37DS100M4 MDRF37DS100M4
247	116	5.67	1630	1.25	
277	104	5.06	1830	1.30	
324	88	4.32	2070	1.45	
346	83	4.05	2140	1.45	
411	70	3.41	2180	1.60	
277	103	10.11	2340	1.65	MDR37DS100M2 MDRF37DS100M2
296	97	9.47	2380	1.70	
351	82	7.97	2290	1.90	
420	68	6.67	2170	2.1	
494	58	5.67	2090	2.5	
553	52	5.06	2030	2.6	
648	44	4.32	1950	2.9	
692	41	4.05	1920	3.0	
821	35	3.41	1840	3.2	
250	115	5.60	360	0.85	MDR27DS100M4 MDRF27DS100M4
280	102	5.00	615	0.95	
328	87	4.27	910	1.00	
350	82	4.00	1010	1.05	
415	69	3.37	1230	1.15	
425	67	6.59	1260	1.55	MDR27DS100M2 MDRF27DS100M2
500	57	5.60	1330	1.75	
560	51	5.00	1300	1.85	
656	44	4.27	1260	2.0	
700	41	4.00	1240	2.1	
831	35	3.37	1200	2.3	

n_a [1/min]	M_a [Nm]	i	F_{Ra} [N]	f_B	typ motoreduktora *gearmotor type*
3.0kW					
217	132	6.45	7130	1.45	MDRX87DS100M4 MDRXF87DS100M4
252	114	5.56	6830	2.0	
276	104	5.07	6650	2.4	
311	92	4.50	6430	3.2	
370	77	3.78	6100	3.9	
296	97	4.73	5050	1.25	MDRX77DS100M4 MDRXF77DS100M4
347	83	4.04	4830	1.75	
378	76	3.70	4720	2.0	
431	67	3.25	4550	2.7	
455	63	3.08	4480	3.1	
371	77	3.77	3150	1.15	MDRX67DS100M4 MDRXF67DS100M4
438	66	3.20	3030	1.55	
485	59	2.89	2950	1.80	
551	52	2.54	2850	2.3	
583	49	2.40	2810	2.5	
685	42	2.04	2690	3.2	
754	38	1.86	2610	3.3	
870	33	1.61	2510	3.5	
1000	29	1.40	2410	3.6	
446	64	3.14	2330	1.00	MDRX57DS100M4 MDRXF57DS100M4
530	54	2.64	2240	1.30	
591	49	2.37	2180	1.40	
686	42	2.04	2100	1.65	
729	39	1.92	2070	1.75	
847	34	1.65	1990	2.0	
948	30	1.48	1930	2.3	
1075	27	1.30	1870	2.4	
4.0kW					
0.71	48594	2028	190000	1.03	MDR187R97DS112M4
0.78	44010	1837	190000	1.14	
0.88	39015	1628	190000	1.28	
1.0	34396	1436	160000	1.45	
1.2	29895	1248	190000	1.67	
1.2	27570	1151	160000	1.81	
1.5	22415	936	190000	2.23	
1.2	29295	1223	150000	1.09	MDR177R97DS112M4
1.4	25132	1049	150000	1.27	
1.5	22447	937	150000	1.43	
1.7	20144	841	150000	1.59	
2.0	16831	703	150000	1.90	
2.7	12800	534	150000	2.50	

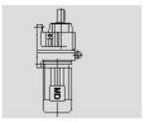

n_a [1/min]	M_a [Nm]	i	F_{Ra} [N]	f_B	typ motoreduktora *gearmotor type*
4.0kW					
1.6	21500	861	120000	0.85	MDR167R97DS112M4 MDRF167R97DS112M4
1.9	19000	760	120000	0.95	
2.2	16100	656	120000	1.10	
2.8	12400	503	120000	1.45	
3.8	9260	376	120000	1.95	
4.2	8240	335	120000	2.2	
2.7	13200	533	62200	1.00	MDR147R87DS112M4 MDRF147R87DS112M4
3.1	11400	462	65600	1.15	
3.3	10600	426	66800	1.2	
3.8	9190	368	68900	1.4	
4.4	8130	326	70200	1.60	
5.1	6920	280	71400	1.90	
5.7	6110	247	72100	2.1	
6.7	5280	214	72800	2.5	
7.5	4670	189	73200	2.8	
8.9	3920	159	73600	3.3	
2.3	15500	619	43200	0.85	MDR147R77DS112M4 MDRF147R77DS112M4
2.5	14000	558	60500	0.95	
2.9	12300	489	64100	1.05	
3.4	10400	415	67200	1.25	
3.7	9570	381	42700	0.85	MDR137R77DS112M4 MDRF137R77DS112M4
4.4	8120	323	53100	1.00	
4.9	7310	291	54800	1.10	
5.6	6390	255	56400	1.25	
6.3	5600	223	57600	1.45	
3.8	9560	376	43000	0.85	MDR137R77DS112M4 MDRF137R77DS112M4
4.2	8600	339	51400	0.95	
4.8	7540	297	54300	1.05	
7.6	4680	187	27200	0.9	MDR107R77DS112M4 MDRF107R77DS112M4
7.3	4890	193	19000	0.90	MDR107R77DS112M4 MDRF107R77DS112M4
8.2	4380	172	29000	1.00	
4.4	8660	163.31	69500	1.50	MDR147D132ML8 MDRF147D132ML8
4.9	7790	146.91	70500	1.65	
6.0	6360	119.86	71900	2.0	
6.6	5800	109.31	72400	2.2	
4.1	9250	174.40	48400	0.85	MDR137D132ML8 MDRF137D132ML8
4.6	8290	156.31	52700	0.95	
5.1	7490	141.12	54400	1.05	
5.6	6800	128.18	55700	1.20	
6.3	6030	113.72	57000	1.35	
7.0	5470	103.20	57800	1.45	
4.3	8860	222.60	50300	0.90	MDR137DS132S6 MDRF137DS132S6
5.1	7500	188.45	54400	1.05	
5.5	6940	174.40	55500	1.15	
6.1	6220	156.31	56700	1.30	
6.8	5620	141.12	57600	1.40	
7.5	5100	128.18	58300	1.55	

n_a [1/min]	M_a [Nm]	i	F_{Ra} [N]	f_B	typ motoreduktora *gearmotor type*
4.0kW					
8.4	4520	113.72	59000	1.75	MDR137DS132S6 MDRF137DS132S6
9.3	4110	103.20	59400	1.95	
11	3530	88.70	59900	2.3	
8.2	4640	172.34	27500	0.95	MDR107DS112M4 MDRF107DS112M4
8.9	4270	158.68	29600	1.00	
10	3820	141.83	31900	1.15	
11	3430	127.68	33400	1.25	
12	3110	115.63	34600	1.40	
14	2760	102.53	35700	1.55	
15	2490	92.70	36200	1.70	
18	2100	78.57	34900	2.0	
19	1960	72.88	34200	2.2	
22	1760	65.60	33200	2.4	
24	1600	59.41	32300	2.7	
27	1420	52.68	31300	3.0	
12	3130	116.48	13800	0.95	MDR97DS112M4 MDRF97DS112M4
14	2780	103.44	22400	1.10	
15	2490	92.48	24100	1.20	
17	2240	83.15	25400	1.35	
20	1940	72.17	26600	1.55	
22	1750	65.21	26000	1.70	
24	1610	59.92	25500	1.85	
27	1430	53.21	24700	2.1	
30	1280	47.58	24000	2.3	
33	1150	42.78	23400	2.6	
38	1000	37.13	22500	3.0	
43	890	33.25	21800	3.2	
44	860	32.05	21600	3.0	MDR97DS112M4 MDRF97DS112M4
52	730	27.19	20600	3.5	
57	675	25.03	20100	4.2	
63	600	22.37	19500	4.5	
71	540	20.14	18900	4.8	
22	1710	63.68	13300	0.90	MDR87DS112M4 MDRF87DS112M4
24	1620	60.35	13900	0.95	
27	1420	52.82	15200	1.10	
30	1280	47.58	16000	1.20	MDR87DS112M4 MDRF87DS112M4
34	1120	41.74	16800	1.40	
39	990	36.84	17400	1.55	
43	880	32.66	17500	1.75	
51	750	27.88	16800	2.0	
41	930	34.40	17600	1.60	MDR87DS112M4 MDRF87DS112M4
45	840	31.40	17400	1.85	
51	750	27.84	16800	2.1	
61	630	23.40	16100	2.5	
66	580	21.51	15700	2.6	
74	515	19.10	15200	2.8	
83	460	17.08	14700	3.0	
92	415	15.35	14300	3.2	
107	360	13.38	13700	3.6	
119	320	11.93	13300	3.8	

n_a [1/min]	M_a [Nm]	i	F_{Ra} [N]	f_B	typ motoreduktora *gearmotor type*
4.0kW					
39	990	36.83	4070	0.85	MDR77DS112M4 MDRF77DS112M4
42	900	33.47	9100	0.90	
49	780	29.00	10300	1.05	
56	680	25.23	10800	1.15	
61	630	23.37	10600	1.30	MDR77DS112M4 MDRF77DS112M4
66	575	21.43	10400	1.40	
76	505	18.80	10100	1.55	
80	480	17.82	9950	1.65	
91	420	15.60	9630	1.75	
101	380	14.05	9380	1.90	
115	330	12.33	9070	2.1	
131	295	10.88	8780	2.3	
147	260	9.64	8500	2.4	
165	230	8.59	8320	2.7	
183	210	7.74	8070	2.9	
209	183	6.79	7770	3.2	
237	161	5.99	7490	3.4	
267	143	5.31	7230	3.6	
71	535	19.89	7960	1.10	MDR67DS112M4 MDRF67DS112M4
79	485	17.95	7800	1.20	
90	425	15.79	7600	1.30	
95	400	14.91	7510	1.35	
112	340	12.70	7240	1.50	
123	310	11.54	7080	1.60	
142	270	10.00	6840	1.75	
163	235	8.70	6600	1.90	
182	210	7.79	6440	1.80	
193	198	7.36	6340	1.85	
227	169	6.27	6070	1.95	
249	153	5.70	5920	2.0	
288	133	4.93	5680	2.2	
331	116	4.29	5460	2.3	
76	500	18.60	3520	0.90	MDR57DS112M4 MDRF57DS112M4
85	450	16.79	3830	1.00	
96	395	14.77	3800	1.10	
102	375	13.95	3780	1.15	MDR57DS112M4 MDRF57DS112M4
120	320	11.88	3710	1.25	
132	290	10.79	3660	1.35	
152	250	9.35	3580	1.45	
157	245	9.06	3590	1.55	
178	215	7.97	3500	1.65	
189	205	7.53	3470	1.75	
222	172	6.41	3350	1.95	
244	157	5.82	3280	2.0	
281	136	5.05	3180	2.3	
323	118	4.39	3070	2.4	
140	275	10.15	1960	0.85	MDR47DS112M4 MDRF47DS112M4
157	245	9.07	2350	0.90	

n_a [1/min]	M_a [Nm]	i	F_{Ra} [N]	f_B	typ motoreduktora *gearmotor type*
4.0kW					
177	215	8.01	2640	0.95	MDR47DS112M4 MDRF47DS112M4
204	187	6.96	2480	0.85	
237	161	6.00	2430	0.95	
252	152	5.64	2410	1.00	
293	131	4.85	2350	1.15	
327	117	4.34	2300	1.25	
371	103	3.83	2250	1.40	
176	215	16.22	2640	1.25	MDR47DS112M2 MDRF47DS112M2
196	195	14.56	2600	1.35	
228	168	12.54	2540	1.50	
242	158	11.79	2510	1.55	
282	136	10.15	2440	1.70	
315	121	9.07	2390	1.80	
357	107	8.01	2320	1.90	
369	104	7.76	2250	1.55	
411	93	6.96	2200	1.70	
477	80	6.00	2130	1.95	
507	75	5.64	2100	2.1	
589	65	4.85	2020	2.3	
660	58	4.34	1970	2.5	
746	51	3.83	1910	2.8	
255	150	5.56	6630	1.50	MDRX87DS112M4 MDRXF87DS112M4
280	137	5.07	6470	1.85	
316	121	4.50	6260	2.4	
375	102	3.78	5960	3.0	
351	109	4.04	4670	1.30	MDRX77DS112M4 MDRXF77DS112M4
383	100	3.70	4560	1.55	
437	87	3.25	4410	2.1	
461	83	3.08	4350	2.3	
527	73	2.70	4190	3.0	
585	65	2.43	4070	3.3	
667	57	2.13	3920	3.5	
755	51	1.88	3780	3.7	
852	45	1.67	3650	3.9	
998	38	1.42	3480	4.1	
444	86	3.20	2870	1.15	MDRX67DS112M4 MDRXF67DS112M4
492	78	2.89	2810	1.35	
559	68	2.54	2730	1.75	
592	65	2.40	2690	1.90	
695	55	2.04	2580	2.4	
765	50	1.86	2520	2.5	
883	43	1.61	2420	2.6	
1015	38	1.40	2330	2.8	
538	71	2.64	1670	0.95	MDRX57DS112M4 MDRXF57DS112M4
599	64	2.37	1780	1.10	
696	55	2.04	1910	1.25	
740	52	1.92	1940	1.35	
859	44	1.65	1900	1.55	
962	40	1.48	1840	1.70	
1090	35	1.30	1790	1.80	

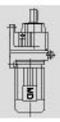

n_a [1/min]	M_a [Nm]	i	F_{Ra} [N]	f_B	typ motoreduktora *gearmotor type*
5.5kW					
1.0	47272	1436	160000	1.06	MDR187R97DS132S4
1.2	41107	1248	190000	1.22	
1.3	37777	1151	160000	1.32	
1.5	30714	936	190000	1.63	
1.7	27738	845	190000	1.80	
2.2	21679	660	160000	2.31	
1.5	30696	937	150000	1.04	MDR177R97DS132S4
1.7	27602	841	150000	1.16	
2.0	23062	703	150000	1.39	
2.3	20446	623	150000	1.57	
2.7	17539	534	150000	1.82	
3.1	15416	470	150000	2.08	
3.5	13442	409	150000	2.38	
2.2	22200	656	120000	0.80	MDR167R97DS132S4 MDRF167R97DS132S4
2.5	19400	579	120000	0.95	
2.8	17000	503	120000	1.05	
3.3	14500	432	120000	1.25	
3.8	12700	376	120000	1.4	
4.3	11300	335	120000	1.60	
4.7	10200	303	120000	1.75	
5.1	9360	279	120000	1.9	
3.1	15700	462	43700	0.85	MDR147R87DS132S4 MDRF147R87DS132S4
3.3	14600	426	57800	0.90	
3.9	12600	368	63800	1.05	
4.4	11100	326	66300	1.15	
5.1	9520	280	68600	1.35	
5.8	8400	247	70000	1.55	
6.7	7250	214	71200	1.80	
7.6	6410	189	71900	2.0	
3.1	17000	229.71	120000	1.05	MDR167D160M8 MDRF167D160M8
3.8	13800	186.93	120000	1.30	
4.6	11300	153.07	120000	1.60	
5.1	10400	139.98	120000	1.75	
5.8	9010	121.81	120000	2.0	
4.3	12100	163.31	64400	1.10	MDR147D160M8 MDRF147D160M8
4.8	10900	146.91	66500	1.20	
5.9	8870	119.86	69300	1.45	
6.5	8090	109.31	70200	1.60	
5.9	8930	163.31	69200	1.45	MDR147DS160S6 MDRF147DS160S6
6.5	8040	146.91	70300	1.60	
8.0	6560	119.86	71700	2.0	

n_a [1/min]	M_a [Nm]	i	F_{Ra} [N]	f_B	typ motoreduktora *gearmotor type*
5.5kW					
8.8	5980	109.31	72200	2.2	MDR147DS160S6 MDRF147DS160S6
10	5180	94.60	72800	2.5	
12	4570	83.47	73200	2.9	
5.5	9480	128.18	44400	0.85	MDR137D160M8 MDRF137D160M8
6.2	8410	113.72	52200	0.95	
6.9	7630	103.20	54200	1.05	
8.0	6560	88.70	56100	1.20	
5.5	9540	174.40	43300	0.85	MDR137DS160S6 MDRF137DS160S6
6.1	8550	156.31	51600	0.95	
6.8	7720	141.12	54000	1.05	
7.5	7010	128.18	55300	1.15	
8.4	6220	113.72	56700	1.30	
9.3	5650	103.20	57600	1.40	
6.4	8180	222.60	53000	1.00	MDR137DS132S4 MDRF137DS132S4
7.6	6920	188.45	55500	1.15	
8.2	6410	174.40	56400	1.25	
9.1	5740	156.31	57400	1.40	
10	5180	141.12	58200	1.55	
11	4710	128.18	58800	1.70	MDR137DS132S4 MDRF137DS132S4
13	4180	113.72	59300	1.90	
14	3790	103.20	59700	2.1	
16	3260	88.70	60200	2.5	
18	2970	80.91	60400	2.7	
19	2700	73.49	60500	3.0	
22	2390	65.20	60700	3.3	
24	2170	59.17	60900	3.7	
28	1870	50.86	61000	4.3	
11	4690	127.68	27100	0.90	MDR107DS132S4 MDRF107DS132S4
12	4250	115.63	29800	1.00	
14	3770	102.53	32100	1.15	
15	3400	92.70	33500	1.25	
18	2890	78.57	33500	1.50	
20	2680	72.88	32900	1.60	
22	2410	65.60	32100	1.80	
24	2180	59.41	31300	1.95	
27	1930	52.68	30300	2.2	
30	1750	47.63	29500	2.5	
35	1480	40.37	28200	2.9	
17	3050	83.15	17600	1.00	MDR97DS132S4 MDRF97DS132S4
20	2650	72.17	21800	1.15	
22	2390	65.21	24600	1.25	
24	2200	59.92	24200	1.35	
27	1950	53.21	23600	1.55	
30	1750	47.58	23000	1.70	
33	1570	42.78	22500	1.90	
39	1360	37.13	21700	2.2	
43	1220	33.25	21100	2.4	
52	1010	27.58	20100	2.6	

n_a [1/min]	M_a [Nm]	i	F_{Ra} [N]	f_B	typ motoreduktora *gearmotor type*
5.5kW					
45	1180	32.05	20900	2.2	MDR97DS132S4 MDRF97DS132S4
53	1000	27.19	20000	2.6	
57	920	25.03	19600	3.1	
64	820	22.37	19000	3.3	
71	740	20.14	18400	3.5	
78	670	18.24	17900	3.7	
88	595	16.17	17300	4.0	
30	1750	47.58	15400	0.90	MDR87DS132S4 MDRF87DS132S4
34	1530	41.74	17000	1.00	
39	1350	36.84	17200	1.15	
44	1200	32.66	16700	1.30	
51	1020	27.88	16100	1.45	
51	1020	27.84	16100	1.50	MDR87DS132S4 MDRF87DS132S4
61	860	23.40	15500	1.80	
66	790	21.51	15200	1.90	
75	700	19.10	14700	2.1	
84	625	17.08	14300	2.2	
93	565	15.35	13900	2.4	
107	490	13.33	13400	2.6	
120	440	11.93	13000	2.8	
144	365	9.90	12300	3.3	
156	335	9.14	12200	3.6	
174	300	8.22	11800	3.8	
200	260	7.13	11300	4.1	
76	690	18.80	9240	1.15	MDR77DS132S4 MDRF77DS132S4
80	655	17.82	9400	1.20	
92	575	15.60	9150	1.30	
102	515	14.05	8950	1.40	MDR77DS132S4 MDRF77DS132S4
116	455	12.33	8690	1.50	
131	400	10.88	8440	1.65	
148	355	9.64	8190	1.80	
166	315	8.59	8080	2.0	
185	285	7.74	7860	2.2	
211	250	6.79	7580	2.3	
239	220	5.99	7320	2.5	
269	195	5.31	7070	2.6	
91	580	15.79	6610	0.95	MDR67DS132S4 MDRF67DS132S4
96	550	14.91	6900	1.00	
113	465	12.70	6810	1.10	
124	425	11.54	6690	1.20	
143	365	10.00	6500	1.30	
164	320	8.70	6310	1.40	
183	285	7.79	6180	1.35	
194	270	7.36	6100	1.35	
228	230	6.27	5860	1.45	
251	210	5.70	5720	1.50	
290	181	4.93	5510	1.60	
333	158	4.29	5310	1.70	

n_a [1/min]	M_a [Nm]	i	F_{Ra} [N]	f_B	typ motoreduktora *gearmotor type*
5.5kW					
331	159	8.70	5300	2.8	MDR67DS132S2 MDRF67DS132S2
369	142	7.79	5160	2.7	
391	134	7.36	5080	2.8	
460	114	6.27	4860	2.9	
506	104	5.70	4730	3.0	
584	90	4.93	4540	3.2	
671	78	4.29	4350	3.5	
97	545	14.77	1730	0.80	MDR57DS132S4 MDRF57DS132S4
103	510	13.95	2070	0.85	
120	435	11.88	2900	0.95	
132	395	10.79	3270	1.00	
153	345	9.35	3240	1.10	MDR57DS132S4 MDRF57DS132S4
179	295	7.97	3220	1.20	
190	275	7.53	3200	1.25	
223	235	6.41	3120	1.40	
246	215	5.82	3080	1.50	
283	185	5.05	3000	1.65	
326	161	4.39	2920	1.75	
308	171	9.35	2930	2.2	MDR57DS132S2 MDRF57DS132S2
361	145	7.97	2850	2.4	
383	137	7.53	2820	2.6	
449	117	6.41	2720	2.9	
494	106	5.82	2660	3.0	
571	92	5.05	2560	3.3	
656	80	4.39	2470	3.5	
295	178	4.85	1870	0.85	MDR47DS132S4 MDRF47DS132S4
330	159	4.34	2110	0.90	
373	141	3.83	2080	1.00	
230	230	12.54	1730	1.10	MDR47DS132S2 MDRF47DS132S2
244	215	11.79	1910	1.15	
284	185	10.15	2250	1.25	
318	165	9.07	2220	1.35	
359	146	8.01	2170	1.40	
480	109	6.00	2000	1.45	
511	103	5.64	1970	1.50	
593	89	4.85	1920	1.70	
664	79	4.34	1870	1.85	
752	70	3.83	1820	2.1	
216	245	6.63	10500	1.90	MDRX107DS132S4 MDRXF107DS132S4
255	205	5.61	9980	2.2	
276	191	5.19	9760	3.7	
307	171	4.65	9460	4.1	
247	215	5.79	8380	1.95	MDRX97DS132S4 MDRXF97DS132S4
291	180	4.91	8010	2.2	
316	166	4.52	7820	3.6	
354	149	4.04	7580	4.0	
393	134	3.64	7350	4.4	
434	121	3.30	7140	4.9	

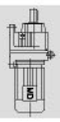

n_a [1/min]	M_a [Nm]	i	F_{Ra} [N]	f_B	typ motoreduktora *gearmotor type*
5.5kW					
489	107	2.92	6890	5.5	MDRX97DS132S4 MDRXF97DS132S4
541	97	2.64	6690	6.1	
638	82	2.24	6360	7.2	
731	72	1.96	6110	7.9	
874	60	1.64	5780	8.4	
1010	52	1.42	5530	8.8	
318	165	4.50	6040	1.75	MDRX87DS132S4 MDRXF87DS132S4
378	139	3.78	5770	2.2	
411	128	3.48	5640	3.2	
463	113	3.09	5460	3.6	
518	101	2.76	5290	4.0	
576	91	2.48	5130	4.5	
664	79	2.15	4930	4.9	
440	119	3.25	4220	1.50	MDRX77DS132S4 MDRXF77DS132S4
464	113	3.08	4160	1.70	
530	99	2.70	4030	2.2	
589	89	2.43	3920	2.4	
671	78	2.13	3780	2.6	
761	69	1.88	3660	2.7	
858	61	1.67	3540	2.8	
1005	52	1.42	3380	3.0	
563	93	2.54	2550	1.25	MDRX67DS132S4 MDRXF67DS132S4
596	88	2.40	2520	1.40	
700	75	2.04	2430	1.80	
770	68	1.86	2380	1.85	
889	59	1.61	2300	1.95	
1020	51	1.40	2220	2.0	
700	75	2.04	665	0.90	MDRX57DS132S4 MDRXF57DS132S4
745	71	1.92	755	1.00	
866	61	1.65	940	1.15	
969	54	1.48	1020	1.25	
1095	48	1.30	1160	1.30	
7.5kW					
1.3	51514	1151	160000	0.97	MDR187R97DS132M4
1.5	41883	936	190000	1.19	
1.7	37825	845	190000	1.32	
2.2	29562	660	160000	1.69	
2.6	24845	555	160000	2.01	
3.1	21084	471	160000	2.37	
3.9	16836	368	150000	1.90	MDR177R107DS132M4
4.1	16010	350	150000	2.00	
4.6	14350	314	150000	2.23	

n_a [1/min]	M_a [Nm]	i	F_{Ra} [N]	f_B	typ motoreduktora *gearmotor type*
7.5kW					
2.0	31448	703	150000	1.02	MDR177R97DS132M4
2.3	27882	623	150000	1.15	
2.7	23917	534	150000	1.34	
3.1	21022	470	150000	1.52	
3.5	18330	409	150000	1.75	
2.8	23400	503	120000	0.80	MDR167R97DS132M4 MDRF167R97DS132M4
3.3	19900	432	120000	0.90	
3.8	17500	376	120000	1.05	
4.3	15600	335	120000	1.15	
4.7	14000	303	120000	1.30	
5.1	12900	279	120000	1.40	
4.4	15200	326	47300	0.85	MDR147R87DS132M4* MDRF147R87DS132M4*
5.1	13000	280	62600	1.00	
5.8	11500	247	65400	1.15	
6.7	9940	214	67900	1.30	
7.6	8790	189	69400	1.50	
9.0	7390	159	71000	1.75	
3.1	22900	229.71	120000	0.80	MDR167D160L8 MDRF167D160L8
3.8	18600	186.93	120000	0.95	
4.7	15200	153.07	120000	1.20	
5.1	13900	139.98	120000	1.30	
5.9	12100	121.81	120000	1.50	
4.2	17100	229.71	120000	1.05	MDR167DS160M6 MDRF167DS160M6
5.1	13900	186.93	120000	1.30	
6.3	11400	153.07	120000	1.60	MDR167DS160M6 MDRF167DS160M6
6.9	10400	139.98	120000	1.70	
7.9	9090	121.81	120000	2.0	
8.9	8020	107.49	120000	2.2	
10	6950	93.19	120000	2.6	
12	6190	82.91	120000	2.9	
13	5500	73.70	120000	3.3	
14	5030	67.40	120000	3.6	
4.4	16200	163.31	32800	0.80	MDR147D160L8 MDRF147D160L8
4.9	14600	146.91	55100	0.90	
6.0	11900	119.86	64700	1.10	
6.6	10900	109.31	66500	1.20	
5.9	12200	163.31	64200	1.05	MDR147DS160M6 MDRF147DS160M6
6.5	11000	146.91	66300	1.20	
8.0	8940	119.86	69200	1.45	
8.8	8150	109.31	70100	1.60	MDR147DS160M6 MDRF147DS160M6
10	7060	94.60	71300	1.85	
12	6230	83.47	72000	2.1	
7.6	9440	188.45	45300	0.85	MDR137DS132M4 MDRF137DS132M4
8.2	8730	174.40	50800	0.90	
9.1	7830	156.31	53700	1.00	
10	7070	141.12	55200	1.15	
11	6420	128.18	56400	1.25	
13	5700	113.72	57500	1.40	

n_a [1/min]	M_a [Nm]	i	F_{Ra} [N]	f_B	typ motoreduktora *gearmotor type*
7.5kW					
14	5170	103.20	58200	1.55	MDR137DS132M4 MDRF137DS132M4
16	4440	88.70	59100	1.80	
18	4050	80.91	59500	1.95	
19	3680	73.49	59800	2.2	
22	3270	65.20	60100	2.5	
24	2960	59.17	60400	2.7	
28	2550	50.86	60600	3.1	
15	4640	92.70	27500	0.95	MDR107DS132M4 MDRF107DS132M4
18	3940	78.57	31300	1.10	
20	3650	72.88	31300	1.20	
22	3290	65.60	30600	1.30	
24	2980	59.41	30000	1.45	
27	2640	52.68	29200	1.65	
30	2390	47.63	28500	1.80	
35	2020	40.37	27300	2.1	
41	1770	35.26	26400	2.4	
48	1480	29.49	25200	2.9	
46	1540	30.77	25500	2.8	MDR107DS132M4 MDRF107DS132M4
52	1380	27.58	24700	3.1	
57	1250	24.90	24100	3.5	
63	1130	22.62	23400	3.8	
24	3000	59.92	19700	1.00	MDR97DS132M4 MDRF97DS132M4
27	2670	53.21	22200	1.15	
30	2380	47.58	21800	1.25	
33	2140	42.78	21300	1.40	
39	1860	37.13	20700	1.60	
43	1670	33.25	20200	1.75	MDR97DS132M4 MDRF97DS132M4
52	1380	27.58	19400	1.95	
45	1610	32.05	20000	1.60	MDR97DS132M4 MDRF97DS132M4
53	1360	27.19	19300	1.90	
57	1250	25.03	18900	2.3	
64	1120	22.37	18400	2.4	
71	1010	20.14	17900	2.6	
78	910	18.24	17500	2.7	
39	1840	36.84	11500	0.85	MDR87DS132M4 MDRF87DS132M4
44	1640	32.66	15700	0.95	
51	1400	27.88	15200	1.05	
51	1390	27.84	15200	1.10	MDR87DS132M4 MDRF87DS132M4
61	1170	23.40	14700	1.30	
66	1080	21.51	14500	1.40	
75	960	19.10	14100	1.50	
84	860	17.08	13700	1.65	
93	770	15.35	12500	1.75	
107	670	13.33	12900	1.90	
120	600	11.93	12600	2.1	
144	495	9.90	12000	2.4	
156	460	9.14	11900	2.6	
174	410	8.22	11600	2.8	

n_a [1/min]	M_a [Nm]	i	F_{Ra} [N]	f_B	typ motoreduktora *gearmotor type*
7.5kW					
200	355	7.13	11100	3.0	MDR87DS132M4 MDRF87DS132M4
224	320	6.39	10800	3.2	
270	265	5.30	10200	3.4	
76	940	18.80	5310	0.85	MDR77DS132M4 MDRF77DS132M4
80	890	17.82	5720	0.85	
92	780	15.60	6610	0.95	
102	705	14.05	7180	1.00	
116	615	12.33	7750	1.10	
131	545	10.88	8010	1.20	
148	485	9.64	7810	1.30	
166	430	8.59	7620	1.45	
185	390	7.74	7590	1.55	
211	340	6.79	7340	1.70	
239	300	5.99	7110	1.80	
269	265	5.31	6890	1.90	
113	635	12.70	4240	0.80	MDR67DS132M4 MDRF67DS132M4
124	580	11.54	4860	0.85	
143	500	10.00	5620	0.95	
164	435	8.70	5930	1.00	
183	390	7.79	5500	0.95	
194	370	7.36	5720	1.00	
228	315	6.27	5600	1.05	
251	285	5.70	5480	1.10	
290	245	4.93	5300	1.15	
333	215	4.29	5130	1.25	
179	400	7.97	980	0.90	MDR57DS132M4 MDRF57DS132M4
190	375	7.53	1280	0.95	
223	320	6.41	2020	1.05	
246	290	5.82	2380	1.10	
283	255	5.05	2760	1.20	
326	220	4.39	2710	1.25	
196	365	14.77	2580	1.20	MDR57DS132M2 MDRF57DS132M2
208	345	13.95	2780	1.25	
244	295	11.88	2780	1.40	
269	265	10.79	2750	1.45	
310	230	9.35	2710	1.60	
364	197	7.97	2670	1.80	
385	186	7.53	2640	1.90	
452	158	6.41	2570	2.1	
498	144	5.82	2520	2.2	
575	125	5.05	2440	2.5	
660	108	4.39	2370	2.6	
216	330	6.63	10100	1.40	MDRX107DS132M4 MDRXF107DS132M4
255	280	5.61	9690	1.60	
276	260	5.19	9490	2.7	
307	235	4.65	9210	3.0	
340	210	4.20	8950	3.9	

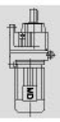

n_a [1/min]	M_a [Nm]	i	F_{Ra} [N]	f_B	typ motoreduktora *gearmotor type*
7.5kW					
274	290	5.79	8080	1.45	MDRX97DS132M4 MDRXF97DS132M4
291	245	4.91	7750	1.60	
316	225	4.52	7580	2.6	
354	205	4.04	7360	2.9	
393	182	3.64	7160	3.3	
434	165	3.30	6960	3.6	
489	146	2.92	6730	4.1	
318	225	4.50	5760	1.30	MDRX87DS132M4 MDRXF87DS132M4
378	189	3.78	5530	1.60	
411	174	3.48	5420	2.3	
463	155	3.09	5260	2.6	
518	138	2.76	5110	2.9	
576	124	2.48	4970	3.3	
664	108	2.15	4780	3.6	
741	97	1.93	4640	3.7	
894	80	1.60	4400	3.9	
1030	70	1.39	4230	4.2	
440	163	3.25	3820	1.10	MDRX77DS132M4 MDRXF77DS132M4
464	154	3.08	3890	1.25	
530	135	2.70	3820	1.60	
589	122	2.43	3730	1.75	
671	107	2.13	3620	1.85	
761	94	1.88	3510	2.0	
858	84	1.67	3400	2.1	
1005	71	1.42	3260	2.2	
563	127	2.54	1500	0.95	MDRX67DS132M4 MDRXF67DS132M4
596	120	2.40	1610	1.00	
700	102	2.04	1810	1.30	
770	93	1.86	1930	1.35	
889	81	1.61	2060	1.40	
1020	70	1.40	2080	1.50	
9.2kW					
3.4	24095	435	160000	2.08	MDR187R107DS160S4
3.7	21754	393	160000	2.30	
1.7	45763	845	190000	1.09	MDR187R97DS160S4
2.2	35766	660	160000	1.40	
2.6	30059	555	160000	1.66	
3.1	25509	471	160000	1.96	
4.0	20369	368	150000	1.57	MDR177R107DS160S4
4.2	19369	350	150000	1.65	
4.7	17361	314	150000	1.84	
5.2	15674	283	150000	2.04	

n_a [1/min]	M_a [Nm]	i	F_{Ra} [N]	f_B	typ motoreduktora *gearmotor type*
9.2kW					
2.7	28936	534	150000	1.11	MDR177R97DS160S4
3.1	25434	470	150000	1.26	
3.6	22177	409	150000	1.44	
3.8	21400	376	120000	0.85	MDR167R97DS160S4 MDRF167R97DS160S4
4.3	19000	335	120000	0.95	
4.8	17100	303	120000	1.05	
5.2	15700	279	120000	1.15	
5.1	15900	280	37800	0.8	MDR147R87DS160S4 MDRF147R87DS160S4
5.8	14000	247	60400	0.95	
6.7	12100	214	64300	1.05	
7.6	10700	189	66700	1.2	
9.1	9020	159	69100	1.45	
8.8	9960	163.31	67800	1.30	MDR147DS160S4 MDRF147DS160S4
9.8	8960	146.91	69200	1.45	
12	7310	119.86	71000	1.80	
13	6670	109.31	71600	1.95	MDR147DS160S4 MDRF147DS160S4
15	5770	94.60	72400	2.3	
17	5090	83.47	72900	2.6	MDR147DS160S4 MDRF147DS160S4
20	4400	72.09	73300	3.0	
22	4090	66.99	73500	3.2	
9.2	9540	156.31	43400	0.85	MDR137DS160S4 MDRF137DS160S4
10	8610	141.12	51400	0.95	
11	7820	128.18	53800	1.00	
13	6940	113.72	55500	1.15	
14	6300	103.20	56600	1.25	MDR137DS160S4 MDRF137DS160S4
16	5410	88.70	57900	1.50	
18	4940	80.91	58500	1.60	
20	4480	73.49	59000	1.80	
22	3980	65.20	59500	2.0	
24	3610	59.17	59900	2.2	
28	3100	50.86	60300	2.6	
32	2710	44.39	60500	3.0	
18	4790	78.57	23300	0.90	MDR107DS160S4 MDRF107DS160S4
20	4450	72.88	28600	0.95	
22	4000	65.60	29400	1.05	
24	3620	59.41	28800	1.20	
27	3210	52.68	28100	1.35	
30	2910	47.63	27500	1.50	
36	2460	40.37	26500	1.75	
41	2150	35.26	25700	2.0	
49	1800	29.49	24600	2.4	
47	1880	30.77	24900	2.3	MDR107DS160S4 MDRF107DS160S4
52	1680	27.58	24200	2.6	

n_a [1/min]	M_a [Nm]	i	F_{Ra} [N]	f_B	typ motoreduktora *gearmotor type*
9.2kW					
58	1520	24.90	23500	2.8	MDR107DS160S4 MDRF107DS160S4
64	1380	22.62	23000	3.1	
72	1220	20.07	22200	3.5	
27	3250	53.21	23280	0.90	MDR97DS160S4 MDRF97DS160S4
30	2900	47.58	20600	1.05	
34	2610	42.78	20300	1.15	
39	2270	37.13	19800	1.30	MDR97DS160S4 MDRF97DS160S4
43	2030	33.25	19400	1.40	
52	1680	27.58	18700	1.60	
58	1530	25.03	18300	1.85	MDR97DS160S4 MDRF97DS160S4
64	1370	22.37	17900	2.0	
71	1230	20.14	17400	2.1	
79	1110	18.24	17000	2.3	
89	990	16.17	16500	2.4	
98	890	14.62	16100	2.6	
116	755	12.39	15400	2.9	
67	1310	21.51	13900	1.15	MDR87DS160S4 MDRF87DS160S4
75	1170	19.10	13600	1.25	
84	1040	17.08	13200	1.35	
94	940	15.35	13000	1.45	
108	810	13.33	12600	1.55	
121	730	11.93	12200	1.70	
145	605	9.90	11700	1.95	
158	560	9.14	11700	2.2	
175	500	8.22	11400	2.3	
202	435	7.13	10900	2.5	
225	390	6.39	10600	2.6	
102	860	14.05	4740	0.85	MDR77DS160S4 MDRF77DS160S4
117	750	12.33	5610	0.90	
132	665	10.88	6280	1.00	
149	590	9.64	6800	1.05	
186	470	7.74	6300	1.30	MDR77DS160S4 MDRF77DS160S4
212	415	6.79	6720	1.40	
240	365	5.99	6920	1.50	
271	325	5.31	6720	1.55	
277	315	5.19	9240	2.2	MDRX107DS160S4 MDRXF107DS160S4
310	285	4.65	8990	2.5	
343	255	4.20	8760	3.2	
377	235	3.81	8540	3.6	
425	205	3.38	8270	4.0	
318	275	4.52	7370	2.2	MDRX97DS160S4 MDRXF97DS160S4
356	245	4.04	7170	2.4	
396	220	3.64	6980	2.7	
437	200	3.30	6800	3.0	
493	178	2.92	6590	3.3	
545	161	2.64	6410	3.7	
643	137	2.24	6120	4.4	
736	119	1.96	5890	4.8	
880	100	1.64	5590	5.1	
1015	86	1.42	5360	5.3	

n_a [1/min]	M_a [Nm]	i	F_{Ra} [N]	f_B	typ motoreduktora *gearmotor type*
9.2kW					
414	210	3.48	5220	1.90	MDRX87DS160S4 MDRXF87DS160S4
466	188	3.09	5080	2.2	
522	168	2.76	4950	2.4	
580	151	2.48	4820	2.7	
669	131	2.15	4650	2.9	
747	118	1.93	4520	3.0	
900	98	1.60	4300	3.2	
1035	85	1.39	4140	3.4	
593	148	2.43	3010	1.45	MDRX77DS160S4 MDRXF77DS160S4
676	130	2.13	3160	1.55	
766	115	1.88	3260	1.65	
864	102	1.67	3280	1.70	
1010	87	1.42	3160	1.80	
11.0kW					
3.4	28809	435	160000	1.74	MDR187R107DS160M4
3.7	26010	393	160000	1.92	
4.1	23628	357	160000	2.12	
4.6	20965	317	160000	2.38	
1.7	54717	845	190000	0.91	MDR187R97DS160M4
2.2	42764	660	160000	1.17	
2.6	35940	555	160000	1.39	
3.1	30500	471	160000	1.64	
4.0	24344	368	150000	1.31	MDR177R107DS160M4
4.2	23176	350	150000	1.38	
4.7	20758	314	150000	1.54	
5.2	18741	283	150000	1.71	
5.7	17025	257	150000	1.88	
6.4	15106	228	150000	2.12	
7.1	13706	207	150000	2.33	
3.1	30410	470	150000	1.05	MDR177R97DS160M4
3.6	26516	409	150000	1.21	
4.9	19600	295	120000	0.90	MDR167R107DS160M4 MDRF167R107DS160M4
5.3	18200	270	120000	1.00	
6.3	15400	229	120000	1.15	
7.2	13400	200	120000	1.35	
8.5	11300	169	120000	1.60	

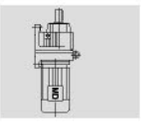

n_a [1/min]	M_a [Nm]	i	F_{Ra} [N]	f_B	typ motoreduktora *gearmotor type*
11.0kW					
5.0	20000	291	120000	0.90	MDR167R107DS160M4 MDRF167R107DS160M4
4.3	22800	335	120000	0.80	MDR167R97DS160M4 MDRF167R97DS160M4
4.8	20500	303	120000	0.90	
5.2	18900	279	120000	0.95	
5.8	16800	247	22800	0.75	MDR147R87DS160M4 MDRF147R87DS160M4
6.7	14500	214	56000	0.90	
7.6	12900	189	63000	1.0	
9.1	10800	159	66600	1.20	
5.1	20500	186.93	120000	0.90	MDR167DS180M6 MDRF167DS180M6
6.3	16700	153.07	120000	1.05	
6.9	15300	139.98	120000	1.20	
7.9	13300	121.81	120000	1.35	
6.3	16800	229.71	120000	1.05	MDR167DS160M4 MDRF167DS160M4
7.7	13600	186.93	120000	1.30	
9.4	11200	153.07	120000	1.60	MDR167DS160M4 MDRF167DS160M4
10	10200	139.98	120000	1.75	
12	8890	121.81	120000	2.0	
13	7840	107.49	120000	2.3	
15	6800	93.19	120000	2.7	
17	6050	82.91	120000	3.0	
6.5	16100	146.91	35400	0.80	MDR147DS180M6 MDRF147DS180M6
8.0	13100	119.86	62400	1.00	
8.8	12000	109.31	64600	1.10	
10	10400	94.60	67300	1.25	
12	9130	83.47	69000	1.40	
8.8	11900	163.31	64700	1.10	MDR147DS160M4 MDRF147DS160M4
9.8	10700	146.91	66700	1.20	
12	8740	119.86	69400	1.50	
13	7970	109.31	70300	1.65	MDR147DS160M4 MDRF147DS160M4
15	6900	94.60	71400	1.90	
17	6090	83.47	72100	2.1	
20	5260	72.09	72800	2.5	
22	4890	66.99	73000	2.7	
24	4460	61.09	73300	2.9	
27	3860	52.87	73600	3.4	
10	10300	141.12	23300	0.80	MDR137DS160M4 MDRF137DS160M4
11	9350	128.18	46900	0.85	
13	8300	113.72	52700	0.95	
14	7530	103.20	54400	1.05	
16	6470	88.70	56300	1.25	
18	5900	80.91	57200	1.35	
20	5360	73.49	57900	1.50	
22	4760	65.20	58700	1.70	
24	4320	59.17	59200	1.85	
28	3710	50.86	59800	2.2	
32	3240	44.39	60200	2.5	
38	2750	37.65	60500	2.9	
44	2400	32.91	60700	3.3	

n_a [1/min]	M_a [Nm]	i	F_{Ra} [N]	f_B	typ motoreduktora *gearmotor type*
11.0kW					
22	4790	65.60	23700	0.90	MDR107DS160M4 MDRF107DS160M4
24	4330	59.41	27600	1.00	
27	3840	52.68	27100	1.10	
30	3470	47.63	26600	1.25	
36	2940	40.37	25700	1.45	MDR107DS160M4 MDRF107DS160M4
41	2570	35.26	25000	1.65	
49	2150	29.49	24000	2.0	
47	2240	30.77	24200	1.90	MDR107DS160M4 MDRF107DS160M4
52	2010	27.58	23600	2.1	
58	1820	24.90	23100	2.4	
64	1650	22.62	22500	2.6	
72	1460	20.07	21800	2.9	
79	1330	18.21	21300	3.2	
34	3120	42.78	14500	0.95	MDR97DS160M4 MDRF97DS160M4
39	2710	37.13	18900	1.10	
43	2430	33.25	18600	1.20	
52	2010	27.58	18000	1.35	
58	1830	25.03	17700	1.55	MDR97DS160M4 MDRF97DS160M4
64	1630	22.37	17300	1.65	
71	1470	20.14	16900	1.80	
79	1330	18.24	16600	1.90	MDR97DS160M4 MDRF97DS160M4
89	1180	16.17	16100	2.0	
98	1070	14.62	15700	2.2	
116	900	12.39	15100	2.4	
133	790	10.83	14600	2.7	
155	675	9.29	14300	3.0	
172	610	8.39	13900	3.3	
202	520	7.12	13200	3.9	
232	455	6.21	12700	4.2	
67	1570	21.51	13200	0.95	MDR87DS160M4 MDRF87DS160M4
75	1390	19.10	13000	1.05	
84	1250	17.08	12800	1.10	
94	1120	15.35	12500	1.20	MDR87DS160M4 MDRF87DS160M4
108	970	13.33	12200	1.30	
121	870	11.93	11900	1.40	
145	720	9.90	11400	1.65	
158	665	9.14	11500	1.80	
175	600	8.22	11200	1.95	
202	520	7.13	10800	2.1	
225	465	6.39	10400	2.2	
272	385	5.30	9910	2.3	
132	795	10.88	4250	0.85	MDR77DS160M4 MDRF77DS160M4
149	705	9.64	5000	0.90	
186	565	7.74	4630	1.10	MDR77DS160M4 MDRF77DS160M4
212	495	6.79	5250	1.15	
240	435	5.99	5720	1.25	
271	390	5.31	6090	1.30	

n_a [1/min]	M_a [Nm]	i	F_{Ra} [N]	f_B	typ motoreduktora *gearmotor type*
11.0kW					
277	380	5.19	9000	1.85	MDRX107DS160M4 MDRXF107DS160M4
310	340	4.65	8770	2.1	
343	305	4.20	8560	2.7	
377	280	3.81	8360	3.0	
425	245	3.38	8100	3.4	
469	225	3.07	7900	3.7	
545	193	2.64	7580	4.3	
318	330	4.52	7150	1.80	MDRX97DS160M4 MDRXF97DS160M4
356	295	4.04	6970	2.0	
396	265	3.64	6800	2.2	
437	240	3.30	6640	2.5	
493	215	2.92	6440	2.8	
545	193	2.64	6280	3.1	
643	163	2.24	6000	3.6	
736	143	1.96	5790	4.0	
880	119	1.64	5500	4.2	
1015	103	1.42	5280	4.4	
414	255	3.48	5030	1.60	MDRX87DS160M4 MDRXF87DS160M4
466	225	3.09	4910	1.80	
522	200	2.76	4790	2.0	
580	181	2.48	4680	2.2	
669	157	2.15	4530	2.5	MDRX87DS160M4 MDRXF87DS160M4
747	141	1.93	4400	2.5	
900	117	1.60	4200	2.7	
1035	102	1.39	4050	2.9	
593	177	2.43	1890	1.20	MDRX77DS160M4 MDRXF77DS160M4
676	155	2.13	2140	1.30	
766	137	1.88	2330	1.35	
864	122	1.67	2460	1.40	
1010	104	1.42	2580	1.50	
15.0kW					
3.4	39285	435	160000	1.27	MDR187R107DS180S4
3.7	35468	393	160000	1.41	
4.1	32220	357	160000	1.55	
4.6	28588	317	160000	1.75	
5.1	25939	287	160000	1.93	
5.9	22292	247	160000	2.24	
6.8	19458	216	160000	2.57	
2.6	49009	555	160000	1.02	MDR187R97DS180S4
3.1	41590	471	160000	1.20	
4.7	28306	314	150000	1.13	MDR177R107DS180S4
5.2	25556	283	150000	1.25	
5.7	23216	257	150000	1.38	
6.4	20599	228	150000	1.55	
7.1	18690	207	150000	1.71	
8.2	16062	178	150000	1.99	

n_a [1/min]	M_a [Nm]	i	F_{Ra} [N]	f_B	typ motoreduktora *gearmotor type*
15.0kW					
6.4	20800	229	120000	0.85	MDR167R107DS180S4 MDRF167R107DS180S4
7.3	18200	200	120000	1.00	
8.6	15300	169	120000	1.20	
6.4	20900	227	120000	0.85	MDR167R107DS180S4* MDRF167R107DS180S4*
7.4	18200	198	120000	1.00	
8.0	16853	182.73	150000	1.90	MDR177DS180S4
9.7	13825	149.94	150000	2.31	
6.3	22600	153.07	120000	0.80	MDR167DS180L6 MDRF167DS180L6
6.9	20700	139.98	120000	0.85	
8.0	18000	121.81	120000	1.00	
9.0	15900	107.49	120000	1.15	
6.4	22500	229.71	120000	0.80	MDR167DS180S4 MDRF167DS180S4
7.8	18300	186.93	120000	1.00	
9.5	15000	153.07	120000	1.20	MDR167DS180S4 MDRF167DS180S4
10	13700	139.98	120000	1.30	
12	12000	121.81	120000	1.50	
14	10500	107.49	120000	1.70	
16	9140	93.19	120000	1.95	
18	8130	82.91	120000	2.2	
20	7230	73.70	120000	2.5	
22	6610	67.40	120000	2.7	
8.9	16100	109.31	34400	0.80	MDR147DS180L6 MDRF147DS180L6
10	14000	94.60	60600	0.95	
12	12300	83.47	64000	1.05	
13	10600	72.09	66800	1.20	
14	9890	66.99	67900	1.30	
8.9	16000	163.31	36200	0.80	MDR147DS180S4 MDRF147DS180S4
9.9	14400	146.91	57400	0.90	
12	11800	119.86	65000	1.10	
13	10700	109.31	66700	1.20	
15	9280	94.60	68800	1.40	MDR147DS180S4 MDRF147DS180S4
17	8190	83.47	70100	1.60	
20	7070	72.09	71300	1.85	
22	6570	66.99	71700	2.0	
24	5990	61.09	72200	2.2	
28	5190	52.87	72800	2.5	
31	4580	46.65	73200	2.8	

n_a [1/min]	M_a [Nm]	i	F_{Ra} [N]	f_B	typ motoreduktora *gearmotor type*
15.0kW					
14	10100	103.20	30700	0.80	MDR137DS180S4 MDRF137DS180S4
16	8700	88.70	51000	0.90	
18	7940	80.91	53500	1.00	
20	7210	73.49	55000	1.10	
22	6400	65.20	56400	1.25	MDR137DS180S4 MDRF137DS180S4
25	5800	59.17	57300	1.40	
29	4990	50.86	58400	1.60	
33	4360	44.39	59100	1.85	
39	3690	37.65	59800	2.2	
44	3230	32.91	60200	2.5	
52	2730	27.83	60500	2.8	
31	4670	47.63	24500	0.90	MDR107DS180S4 MDRF107DS180S4
36	3960	40.37	23900	1.10	
41	3460	35.26	23400	1.25	
50	2890	29.49	22600	1.50	
47	3020	30.77	22800	1.40	MDR107DS180S4 MDRF107DS180S4
53	2710	27.58	22400	1.60	
59	2440	24.90	21900	1.75	
65	2220	22.62	21400	1.95	
73	1970	20.07	20900	2.2	
80	1790	18.21	20400	2.4	
93	1540	15.65	19700	2.8	
107	1340	13.66	19000	3.2	
53	2710	27.58	16500	1.00	MDR97DS180S4 MDRF97DS180S4
58	2460	25.03	16300	1.15	MDR97DS180S4 MDRF97DS180S4
65	2200	22.37	16100	1.25	
72	1980	20.14	15800	1.30	
80	1790	18.24	15600	1.40	
90	1590	16.17	15200	1.50	
100	1430	14.62	14900	1.60	
118	1220	12.39	14400	1.80	
135	1060	10.83	14000	1.95	
157	910	9.29	13800	2.2	
174	820	8.39	13400	2.5	
205	700	7.12	12800	2.9	
235	610	6.21	12400	3.1	
85	1680	17.08	11600	0.85	MDR87DS180S4 MDRF87DS180S4
95	1510	15.35	11500	0.90	
110	1310	13.33	11300	1.00	
122	1170	11.93	11100	1.05	
147	970	9.90	10700	1.20	MDR87DS180S4 MDRF87DS180S4
160	900	9.14	11000	1.35	
178	810	8.22	10700	1.45	
205	700	7.13	10300	1.55	
229	625	6.39	10100	1.65	
275	520	5.30	9600	1.75	
281	510	5.19	8440	1.35	MDRX107DS180S4 MDRXF107DS180S4
314	455	4.65	8260	1.50	
348	410	4.20	8100	2.0	
383	375	3.81	7930	2.2	

n_a [1/min]	M_a [Nm]	i	F_{Ra} [N]	f_B	typ motoreduktora *gearmotor type*
15.0kW					
431	330	3.38	7720	2.5	MDRX107DS180S4 MDRXF107DS180S4
475	300	3.07	7540	2.8	
553	260	2.64	7260	3.2	
634	225	2.30	7010	3.7	
747	192	1.95	6710	4.0	
855	168	1.71	6470	4.2	
1010	142	1.44	6170	4.6	
323	445	4.52	6660	1.35	MDRX97DS180S4 MDRXF97DS180S4
361	395	4.04	6530	1.50	
401	355	3.64	6400	1.65	
443	325	3.30	6270	1.85	
499	285	2.92	6110	2.1	
552	260	2.64	5970	2.3	
652	220	2.24	5730	2.7	
746	192	1.96	5550	3.0	
892	161	1.64	5290	3.2	
1030	139	1.42	5090	3.3	
420	340	3.48	4260	1.20	MDRX87DS180S4 MDRXF87DS180S4
473	305	3.09	4510	1.35	
529	270	2.76	4430	1.50	
588	245	2.48	4350	1.65	
678	210	2.15	4230	1.80	
757	189	1.93	4130	1.90	MDRX87DS180S4 MDRXF87DS180S4
913	157	1.60	3960	2.0	
1050	137	1.39	3840	2.1	
18.5kW					
3.7	43446	393	160000	1.15	MDR187R107DS180M4
4.1	39468	357	160000	1.27	
4.6	35019	317	160000	1.43	
5.1	31773	287	160000	1.57	
6.0	27307	247	160000	1.83	
6.8	23834	216	160000	2.10	
8.0	20223	183	160000	2.47	
5.2	31304	283	150000	1.02	MDR177R107DS180M4
5.7	28438	257	150000	1.13	
6.4	25232	228	150000	1.27	
7.1	22894	207	150000	1.40	
8.3	19675	178	150000	1.63	
9.8	16940	149.94	150000	1.89	MDR177DS180M4
12.0	13783	122.00	150000	2.32	

n_a [1/min]	M_a [Nm]	i	F_{Ra} [N]	f_B	typ motoreduktora *gearmotor type*
18.5kW					
7.8	22500	186.93	120000	0.80	MDR167DS180M4 MDRF167DS180M4
9.6	18500	153.07	120000	1.00	
10	16900	139.98	120000	1.05	
12	14700	121.81	120000	1.25	
14	13000	107.49	120000	1.40	MDR167DS180M4 MDRF167DS180M4
16	11200	93.19	120000	1.60	
18	10000	82.91	120000	1.80	
20	8890	73.70	120000	2.0	
22	8130	67.40	120000	2.2	
25	7070	58.65	120000	2.6	
12	14500	119.86	56900	0.90	MDR147DS180M4 MDRF147DS180M4
13	13200	109.31	62300	1.00	
15	11400	94.60	65600	1.15	
18	10100	83.47	67700	1.30	MDR147DS180M4 MDRF147DS180M4
20	8690	72.09	69500	1.50	
22	8080	66.99	70200	1.60	
24	7370	61.09	71000	1.75	
28	6380	52.87	71900	2.0	
31	5630	46.65	72500	2.3	
36	4860	40.29	73000	2.7	
18	9760	80.91	39000	0.80	MDR137DS180M4 MDRF137DS180M4
20	8860	73.49	50200	0.90	
22	7860	65.20	53700	1.00	
25	7140	59.17	55100	1.10	
29	6130	50.86	56800	1.30	MDR137DS180M4 MDRF137DS180M4
33	5350	44.39	58000	1.50	
39	4540	37.65	58900	1.75	
45	3970	32.91	59500	2.0	
53	3360	27.83	60100	2.3	
50	3570	29.57	59900	2.2	MDR137DS180M4 MDRF137DS180M4
61	2910	24.12	60400	2.8	
67	2650	22.00	60600	3.0	
77	2300	19.04	60800	3.5	
87	2030	16.80	60900	4.0	

n_a [1/min]	M_a [Nm]	i	F_{Ra} [N]	f_B	typ motoreduktora *gearmotor type*
18.5kW					
36	4870	40.37	20200	0.90	MDR107DS180M4 MDRF107DS180M4
42	4250	35.26	22000	1.00	
50	3560	29.49	21500	1.20	
59	3000	24.90	20900	1.45	MDR107DS180M4 MDRF107DS180M4
65	2730	22.62	20600	1.60	
73	2420	20.07	20100	1.80	
80	2200	18.21	19700	1.95	
94	1890	15.65	19100	2.3	
107	1650	13.66	18500	2.6	
126	1400	11.59	17800	3.1	
145	1220	10.13	17200	3.5	
186	950	7.86	16300	3.1	
220	800	6.66	15600	3.7	
73	2430	20.14	14900	1.05	MDR97DS180M4 MDRF97DS180M4
80	2200	18.24	14700	1.15	
91	1950	16.17	14500	1.25	
100	1760	14.62	14200	1.30	
118	1490	12.39	13800	1.45	
135	1310	10.83	13500	1.60	
158	1120	9.29	13400	1.80	
175	1010	8.39	13100	2.0	
206	860	7.12	12600	2.3	
236	750	6.21	12100	2.5	
282	625	5.20	11600	2.8	
326	545	4.50	11100	3.0	
110	1610	13.33	10600	0.80	MDR87DS180M4 MDRF87DS180M4
123	1440	11.93	10400	0.85	
148	1190	9.90	10200	1.00	
160	1100	9.14	10600	1.10	
178	990	8.22	10300	1.15	
205	860	7.13	10000	1.25	
229	770	6.39	9770	1.30	
276	640	5.30	9350	1.40	
349	505	4.20	7710	1.65	MDRX107DS180M4 MDRXF107DS180M4
384	460	3.81	7580	1.80	
433	410	3.38	7400	2.0	
477	370	3.07	7250	2.2	
555	320	2.64	7010	2.6	MDRX107DS180M4 MDRXF107DS180M4
636	280	2.30	6780	3.0	
750	235	1.95	6510	3.3	
858	205	1.71	6290	3.4	
1015	174	1.44	6020	3.7	
402	440	3.64	6060	1.35	MDRX97DS180M4 MDRXF97DS180M4
444	400	3.30	5960	1.50	
501	355	2.92	5830	1.70	
554	320	2.64	5710	1.85	
654	270	2.24	5510	2.2	
749	235	1.96	5350	2.4	

n_a [1/min]	M_a [Nm]	i	F_{Ra} [N]	f_B	typ motoreduktora *gearmotor type*
18.5kW					
895	197	1.64	5120	2.6	MDRX97DS180M4
1035	171	1.42	4940	2.7	MDRXF97DS180M4
531	335	2.76	3040	1.20	MDRX87DS180M4 MDRXF87DS180M4
590	300	2.48	3340	1.35	
680	260	2.15	3630	1.50	
760	235	1.93	3820	1.55	
916	193	1.60	3770	1.65	
1055	168	1.39	3670	1.75	
22.0kW					
3.7	51666	393	160000	0.97	MDR187R107DS180L4
4.1	46935	357	160000	1.07	
4.6	41644	317	160000	1.20	
5.1	37784	287	160000	1.32	
6.0	32473	247	160000	1.54	
6.8	28344	216	160000	1.76	
8.0	24048	183	160000	2.08	
9.2	21019	160	160000	2.38	
6.4	30014	228	150000	1.07	MDR177R107DS180L4
7.1	27225	207	150000	1.18	
8.3	23398	178	150000	1.37	
9.1	21613	160.87	190000	2.31	MDR187DS180L4
9.9	19852	147.76	190000	2.52	
9.8	20145	149.94	150000	1.59	MDR177DS180L4
12.0	16390	122.00	150000	1.95	
15.1	13112	97.60	147200	2.44	
9.6	22000	153.07	120000	0.80	MDR167DS180L4 MDRF167DS180L4
10	20100	139.98	120000	0.90	
12	17500	121.81	120000	1.05	
14	15400	107.49	120000	1.15	MDR167DS180L4 MDRF167DS180L4
16	13400	93.19	120000	1.35	
18	11900	82.91	120000	1.50	
20	10600	73.70	120000	1.70	
22	9670	67.40	120000	1.85	
25	8410	58.65	120000	2.1	
28	7420	51.76	120000	2.4	
33	6430	44.87	120000	2.8	
13	15700	109.31	41300	0.85	MDR147DS180L4 MDRF147DS180L4
15	13600	94.60	61500	0.95	
18	12000	83.47	64600	1.10	
20	10300	72.09	67300	1.25	
22	9610	66.99	68300	1.35	MDR147DS180L4 MDRF147DS180L4
24	8760	61.09	69400	1.50	
28	7580	52.87	70800	1.70	
31	6690	46.65	71600	1.95	
36	5780	40.29	72400	2.2	
41	5110	35.64	72900	2.5	
49	4300	29.95	73400	3.0	
22	9350	65.20	46900	0.85	MDR137DS180L4 MDRF137DS180L4
25	8480	59.17	51900	0.95	
29	7290	50.86	54800	1.10	
33	6370	44.39	56500	1.25	
39	5400	37.65	57900	1.50	MDR137DS180L4 MDRF137DS180L4
45	4720	32.91	58700	1.70	
53	3990	27.83	59500	1.90	

n_a [1/min]	M_a [Nm]	i	F_{Ra} [N]	f_B	typ motoreduktora *gearmotor type*
22.0kW					
50	4240	29.57	59300	1.85	MDR137DS180L4 MDRF137DS180L4
61	3460	24.12	60000	2.3	
67	3150	22.00	60200	2.5	
77	2730	19.04	60500	2.9	
87	2410	16.80	60700	3.3	MDR137DS180L4 MDRF137DS180L4
101	2080	14.51	60900	3.9	
114	1840	12.83	61000	4.4	
42	5060	35.26	17280	0.85	MDR107DS180L4 MDRF107DS180L4
50	4230	29.49	20400	1.00	
59	3570	24.90	20000	1.20	MDR107DS180L4 MDRF107DS180L4
65	3240	22.62	19700	1.35	
73	2880	20.07	19300	1.50	
80	2610	18.21	19000	1.65	MDR107DS180L4 MDRF107DS180L4
94	2240	15.65	18500	1.90	
107	1960	13.66	18000	2.2	
126	1660	11.59	17300	2.6	
145	1450	10.13	16800	3.0	
171	1230	8.56	16100	3.5	
186	1130	7.86	16100	2.6	
220	960	6.66	15400	3.1	
252	840	5.82	14800	3.6	
73	2890	20.14	14000	0.90	MDR97DS180L4 MDRF97DS180L4
80	2620	18.24	13900	0.95	
91	2320	16.17	13700	1.05	
100	2100	14.62	13600	1.10	
118	1780	12.39	13200	1.25	MDR97DS180L4 MDRF97DS180L4
135	1550	10.83	13000	1.35	
158	1330	9.29	13100	1.50	
175	1200	8.39	12800	1.70	
206	1020	7.12	12300	1.95	
236	890	6.21	11900	2.1	
282	745	5.20	11400	2.4	
326	645	4.50	10900	2.5	
148	1420	9.90	9640	0.85	MDR87DS180L4 MDRF87DS180L4
160	1310	9.14	10100	0.90	
178	1180	8.22	9960	1.00	
205	1020	7.13	9700	1.05	
229	920	6.39	9490	1.10	
276	760	5.30	9110	1.20	
349	600	4.20	7330	1.40	MDRX107DS180L4 MDRXF107DS180L4
384	545	3.81	7230	1.50	
433	485	3.38	7090	1.70	
477	440	3.07	6960	1.90	
555	380	2.64	6760	2.2	
636	330	2.30	6560	2.5	MDRX107DS180L4 MDRXF107DS180L4
750	280	1.95	6320	2.7	
858	245	1.71	6120	2.9	
1015	205	1.44	5870	3.1	

n_a [1/min]	M_a [Nm]	i	F_{Ra} [N]	f_B	typ motoreduktora *gearmotor type*
22.0kW					
402	520	3.64	5720	1.15	MDRX97DS180L4 MDRXF97DS180L4
444	475	3.30	5650	1.25	
501	420	2.92	5560	1.40	
554	380	2.64	5460	1.55	
654	320	2.24	5300	1.85	
749	280	1.96	5160	2.0	
895	235	1.64	4960	2.2	
1035	205	1.42	4790	2.2	
531	395	2.76	1270	1.00	MDRX87DS180L4 MDRXF87DS180L4
590	355	2.48	1710	1.15	
680	310	2.15	2160	1.25	
760	275	1.93	2450	1.30	
916	230	1.60	2750	1.35	
1055	200	1.39	3030	1.45	
30.0kW					
6.8	38650	216	160000	1.29	MDR187R107DS200L4
8.0	32793	183	160000	1.52	
9.2	28662	160	160000	1.74	
10.9	24220	135	160000	2.06	
7.1	37125	207	150000	0.86	MDR177R107DS200L4
8.3	31906	178	150000	1.00	
9.1	29472	160.87	190000	1.70	MDR187DS200L4
9.9	27071	147.76	190000	1.85	
11.4	23692	129.32	190000	2.11	
12.7	21250	115.99	188200	2.35	
12.0	22350	122.00	150000	1.43	MDR177DS200L4
15.1	17880	97.60	147200	1.79	
16.9	15901	86.80	140100	2.01	
19.4	13853	75.62	132000	2.31	
14	20900	107.49	120000	0.85	MDR167DS200L4 MDRF167DS200L4
16	18200	93.19	120000	1.00	
18	16200	82.91	120000	1.10	
20	14400	73.70	120000	1.25	MDR167DS200L4 MDRF167DS200L4
22	13100	67.40	120000	1.35	
25	11400	58.65	120000	1.55	
28	10100	51.76	120000	1.80	
33	8740	44.87	120000	2.1	
37	7780	39.92	120000	2.3	
43	6710	34.41	120000	2.7	
53	5450	27.96	120000	3.3	
62	4620	23.71	120000	3.9	
18	16300	83.47	32400	0.80	MDR147DS200L4 MDRF147DS200L4
20	14000	72.09	60400	0.95	
22	13100	66.99	62500	1.00	

n_a [1/min]	M_a [Nm]	i	F_{Ra} [N]	f_B	typ motoreduktora *gearmotor type*
30.0kW					
24	11900	91.09	64700	1.10	MDR147DS200L4 MDRF147DS200L4
28	10300	52.87	67300	1.25	MDR147DS200L4 MDRF147DS200L4
32	9090	46.65	69000	1.45	
36	7850	40.29	70500	1.65	
41	6950	35.64	71400	1.85	
49	5840	29.95	72300	2.2	
61	4710	24.19	73100	2.5	
72	3980	20.44	73600	3.0	MDR147DS200L4 MDRF147DS200L4
82	3510	18.04	73800	3.0	
94	3050	15.64	74000	4.3	
29	9910	50.86	35800	0.80	MDR137DS200L4 MDRF137DS200L4
33	8650	44.39	51200	0.90	
39	7340	37.65	54700	1.10	
45	6410	32.91	56400	1.25	
53	5420	27.83	57900	1.40	
61	4700	24.12	58800	1.70	MDR137DS200L4 MDRF137DS200L4
67	4290	22.00	59200	1.85	
77	3710	19.04	59800	2.2	
88	3270	16.80	60100	2.4	
101	2830	14.51	59500	2.8	MDR137DS200L4 MDRF137DS200L4
115	2500	12.83	58400	3.2	
136	2100	10.79	56600	3.8	
194	1480	7.59	53300	3.5	
230	1240	6.38	51300	4.1	
73	3910	20.07	17600	1.10	MDR107DS200L4 MDRF107DS200L4
81	3550	18.21	17400	1.20	
94	3050	15.65	17100	1.40	
108	2660	13.66	16800	1.60	
127	2260	11.59	16300	1.90	
145	1970	10.13	15900	2.2	
172	1670	8.56	15400	2.6	
187	1530	7.86	15500	1.95	
221	1300	6.66	14900	2.3	
252	1140	5.82	14400	2.6	
299	960	4.92	13700	3.0	
101	2850	14.62	12000	0.80	MDR97DS200L4 MDRF97DS200L4
119	2420	12.39	11900	0.90	
136	2110	10.83	11800	1.00	
158	1810	9.29	12300	1.10	
175	1640	8.39	12100	1.25	
207	1390	7.12	11700	1.45	MDR97DS200L4 MDRF97DS200L4
237	1210	6.21	11400	1.55	
283	1010	5.20	10900	1.75	
327	880	4.50	10500	1.85	
434	660	3.38	6370	1.25	MDRX107DS200L4 MDRXF107DS200L4
479	600	3.07	6310	1.40	
557	515	2.64	6180	1.60	
638	450	2.30	6050	1.85	

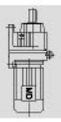

n_a [1/min]	M_a [Nm]	i	F_{Ra} [N]	f_B	typ motoreduktora *gearmotor type*
30.0kW					
752	380	1.95	5870	2.0	MDRX107DS200L4 MDRXF107DS200L4
860	335	1.71	5720	2.1	
1020	280	1.44	5520	2.3	
503	570	2.92	3120	1.05	MDRX97DS200L4 MDRXF97DS200L4
556	515	2.64	3560	1.15	
656	435	2.24	4050	1.35	
751	380	1.96	4450	1.50	
898	320	1.64	4580	1.60	
1040	275	1.42	4450	1.65	
37.0kW					
6.8	47507	216	160000	1.05	MDR187R107DS225S4
8.1	40308	183	160000	1.24	
9.2	35230	160	160000	1.42	
10.9	29770	135	160000	1.68	
9.2	36226	160.87	190000	1.38	MDR187DS225S4
10.0	33274	147.76	190000	1.50	
11.4	29121	129.32	190000	1.72	
12.7	26120	115.99	188200	1.91	
14.6	22679	100.71	177200	2.20	
12.1	27472	122.00	150000	1.16	MDR177DS225S4
15.1	21977	97.60	147200	1.46	
17.0	19545	86.80	140100	1.64	
19.5	17028	75.62	132000	1.88	
21.9	15193	67.47	125600	2.11	
25.6	12950	57.51	117000	2.47	
31.0	10730	47.65	107400	2.98	
16	22400	93.19	120000	0.80	MDR167DS225S4 MDRF167DS225S4
18	19900	82.91	120000	0.90	
20	17700	73.70	120000	1.00	
22	16200	67.40	120000	1.10	
25	14100	58.65	120000	1.30	
28	12400	51.76	120000	1.45	
33	10800	44.87	120000	1.65	
37	9600	39.92	120000	1.90	
43	8270	34.41	120000	2.2	
53	6720	27.96	120000	2.7	
48	7380	30.71	120000	1.35	MDR167DS225S4 MDRF167DS225S4
60	5900	24.57	120000	2.4	
67	5250	21.85	120000	2.5	
77	4580	19.03	120000	3.5	
87	4080	16.98	120000	3.7	
22	16100	66.99	35000	0.80	MDR147DS225S4 MDRF147DS225S4
24	14700	61.09	54200	0.90	
28	12700	52.87	63200	1.00	
32	11200	46.65	65900	1.15	MDR147DS225S4 MDRF147DS225S4
36	9680	40.29	68200	1.35	
41	8570	35.64	69700	1.50	

n_a [1/min]	M_a [Nm]	i	F_{Ra} [N]	f_B	typ motoreduktora *gearmotor type*
37.0kW					
49	7200	29.95	71100	1.80	MDR147DS225S4 MDRF147DS225S4
61	5810	24.19	72400	2.1	
72	4910	20.44	73000	2.4	MDR147DS225S4 MDRF147DS225S4
82	4340	18.04	73400	2.4	
94	3760	15.64	73700	3.5	
106	3340	13.91	73900	3.8	MDR147DS225S4 MDRF147DS225S4
39	9050	37.65	49400	0.90	MDR137DS225S4 MDRF137DS225S4
45	7910	32.91	53600	1.00	
53	6690	27.83	55900	1.15	
61	5800	24.12	57300	1.40	MDR137DS225S4 MDRF137DS225S4
67	5290	22.00	58000	1.50	
77	4580	19.04	57800	1.75	
88	4040	16.80	57300	2.0	
101	3490	14.51	56600	2.3	MDR137DS225S4 MDRF137DS225S4
115	3080	12.83	55800	2.6	
136	2590	10.79	54400	3.1	
169	2090	8.71	52600	3.7	
194	1820	7.59	51900	2.8	
230	1530	6.38	50100	3.3	
285	1240	5.15	47800	3.7	
73	4820	20.07	16100	0.90	MDR107DS225S4 MDRF107DS225S4
81	4380	18.21	16100	1.00	
94	3760	15.65	15900	1.15	
108	3280	13.66	15700	1.30	
127	2790	11.59	15400	1.55	
145	2430	10.13	15100	1.75	
172	2060	8.56	14700	2.1	
187	1890	7.86	15000	1.55	
221	1600	6.66	14400	1.85	
252	1400	5.82	14000	2.1	
299	1180	4.92	13400	2.5	
434	810	3.38	4470	1.00	MDRX107DS225S4 MDRXF107DS225S4
479	740	3.07	4950	1.10	
557	635	2.64	5530	1.30	
638	555	2.30	5610	1.50	
752	470	1.95	5490	1.65	
860	410	1.71	5370	1.70	
1020	345	1.44	5220	1.85	
45.0kW					
8.1	49023	183	160000	1.02	MDR187R107DS225M4
9.2	42848	160	160000	1.17	
10.9	36207	135	160000	1.38	
10.0	40469	147.76	190000	1.24	MDR187DS225M4
11.4	35418	129.32	190000	1.41	
12.7	31767	115.99	188200	1.57	
14.6	27582	100.71	177200	1.81	
16.1	25026	91.38	169000	2.00	
18.7	21557	78.71	159000	2.32	

n_a [1/min]	M_a [Nm]	i	F_{Ra} [N]	f_B	typ motoreduktora *gearmotor type*
45.0kW					
12.1	33411	122.00	150000	0.96	MDR177DS225M4
15.1	26729	97.60	147200	1.20	
17.0	23771	86.80	140100	1.35	
19.5	20710	75.62	132000	1.55	
21.9	18478	67.47	125600	1.73	
25.6	15750	57.51	117000	2.03	
31.0	13050	47.65	107400	2.45	
20	21500	73.70	120000	0.85	MDR167DS225M4 MDRF167DS225M4
22	19700	67.40	120000	0.90	
25	17100	58.65	120000	1.05	
28	15100	51.76	120000	1.20	
33	13100	44.87	120000	1.35	MDR167DS225M4 MDRF167DS225M4
37	11700	39.92	120000	1.55	
43	10100	34.41	120000	1.80	
53	8170	27.96	120000	2.2	
62	6930	23.71	120000	2.6	
48	8980	30.71	120000	1.10	MDR167DS225M4 MDRF167DS225M4
60	7180	24.57	120000	1.95	
67	6390	21.85	120000	2.0	
77	5560	19.03	120000	2.9	
87	4960	16.98	120000	3.0	
28	15500	52.87	44400	0.85	MDR147DS225M4 MDRF147DS225M4
32	13600	46.65	61300	0.95	
36	11800	40.29	65000	1.10	
41	10400	35.64	67200	1.25	
49	8760	29.95	69400	1.50	
61	7070	24.19	71300	1.70	
72	5970	20.44	72200	2.0	MDR147DS225M4 MDRF147DS225M4
82	5270	18.04	72800	2.0	
94	4570	15.64	73200	2.8	
106	4070	13.91	73500	3.1	
123	3510	11.99	73800	3.7	
203	2120	7.25	74300	4.1	
45	9620	32.91	41700	0.85	MDR137DS225M4 MDRF137DS225M4
53	8130	27.83	51200	0.95	
61	7050	24.12	52400	1.15	MDR137DS225M4 MDRF137DS225M4
67	6430	22.00	52900	1.25	
77	5570	19.04	53300	1.45	
88	4910	16.80	53400	1.65	
101	4240	14.51	53200	1.90	MDR137DS225M4 MDRF137DS225M4
115	3750	12.83	52800	2.1	
136	3150	10.79	51900	2.5	
169	2550	8.71	50500	3.1	
194	2220	7.59	50200	2.3	
230	1860	6.38	48700	2.7	
285	1510	5.15	46700	3.0	
94	4580	15.65	14600	0.95	MDR107DS225M4 MDRF107DS225M4
108	3990	13.66	14600	1.10	
127	3390	11.59	14400	1.25	

n_a [1/min]	M_a [Nm]	i	F_{Ra} [N]	f_B	typ motoreduktora *gearmotor type*
45.0kW					
145	2960	10.13	14300	1.45	MDR107DS225M4 MDRF107DS225M4
172	2500	8.56	14000	1.70	
187	2300	7.86	14400	1.30	
221	1950	6.66	14000	1.50	
252	1700	5.82	13600	1.75	
299	1440	4.92	13100	2.0	
434	990	3.38	1360	0.85	MDRX107DS225M4 MDRXF107DS225M4
479	900	3.07	2080	0.90	
557	770	2.64	2970	1.10	
638	675	2.30	3640	1.25	
752	570	1.95	4200	1.35	
860	500	1.71	4540	1.40	
1020	420	1.44	4880	1.55	
55.0kW					
11.4	43142	129.32	190000	1.16	MDR187DS250M4
12.8	38696	115.99	188200	1.29	
14.7	33598	100.71	177200	1.49	
16.2	30484	91.38	169000	1.64	
18.8	26259	78.71	159000	1.90	
22.4	22068	66.15	147000	2.27	
25.8	19107	57.28	137500	2.62	
15.2	32559	97.60	147200	0.98	MDR177D250M4
17.1	28955	86.80	140100	1.11	
19.6	25226	75.62	132000	1.27	
21.9	22507	67.47	125600	1.42	
25.7	19184	57.51	117000	1.67	
31.1	15896	47.65	107400	2.01	
36.4	13568	40.67	99700	2.36	
25	20900	58.65	120000	0.85	MDR167D250M4 MDRF167D250M4
29	18400	51.76	120000	1.00	
33	16000	44.87	120000	1.15	
37	14200	39.92	120000	1.25	
43	12300	34.41	120000	1.45	
53	9960	27.96	120000	1.80	
62	8440	23.71	120000	2.1	
60	8750	24.57	120000	1.60	MDR167D250M4 MDRF167D250M4
68	7780	21.85	120000	1.65	
77	6780	19.03	120000	2.4	
87	6050	16.98	120000	2.5	MDR167D250M4 MDRF167D250M4
102	5150	14.48	120000	3.5	
123	4270	11.99	120000	4.0	
32	16600	46.65	26600	0.80	MDR147D250M4 MDRF147D250M4
37	14300	40.29	58200	0.90	
41	12700	35.64	63300	1.00	
49	10700	29.95	66800	1.20	
61	8610	24.19	69600	1.40	

n_a [1/min]	M_a [Nm]	i	F_{Ra} [N]	f_B	typ motoreduktora *gearmotor type*
55.0kW					
72	7280	20.44	71100	1.65	MDR147D250M4 MDRF147D250M4
82	6420	18.04	71900	1.65	
94	5570	15.64	72500	2.3	
106	4950	13.91	73000	2.5	
123	4270	11.99	73400	3.0	MDR147D250M4 MDRF147D250M4
151	3470	9.74	73800	3.8	
203	2580	7.25	74200	3.4	
250	2100	5.89	72500	4.1	
77	6780	19.04	47800	1.20	MDR137D250M4 MDRF137D250M4
88	5980	16.80	48500	1.35	
102	5170	14.51	48900	1.55	
115	4570	12.83	49000	1.75	MDR137D250M4 MDRF137D250M4
137	3840	10.79	48800	2.1	
169	3100	8.71	48000	2.5	
194	2700	7.59	48100	1.90	
231	2270	6.38	46900	2.3	
286	1830	5.15	45200	2.5	
75.0kW					
14.7	45815	100.71	177200	1.09	MDR187D280S4
16.2	41569	91.38	169000	1.20	
18.8	35807	78.71	159000	1.40	
22.4	30093	66.15	147000	1.66	
25.8	26055	57.28	137500	1.92	
31.0	21713	47.73	126100	2.30	
33.1	20359	44.75	116600	2.46	
21.9	30692	67.47	125600	1.04	MDR177D280S4
25.7	26161	57.51	117000	1.22	
31.1	21676	47.65	107400	1.48	
36.4	18501	40.67	99700	1.73	
45.8	14694	32.30	93700	2.18	
51.4	13111	28.82	88600	2.44	
33	21700	44.87	120000	0.85	MDR167D280S4 MDRF167D280S4
37	19300	39.92	120000	0.95	
43	16700	34.41	120000	1.10	
53	13500	27.96	120000	1.35	
62	11500	23.71	120000	1.55	
60	11900	24.57	120000	1.20	MDR167D280S4 MDRF167D280S4
68	10600	21.85	120000	1.25	
78	9210	19.03	120000	1.75	
87	8220	16.98	120000	1.85	MDR167D280S4 MDRF167D280S4
102	7000	14.48	120000	2.6	
123	5800	11.99	116600	2.9	
145	4950	10.24	112800	3.4	
49	14500	29.95	56500	0.90	MDR147D280S4 MDRF147D280S4
61	11700	24.19	65100	1.00	

n_a [1/min]	M_a [Nm]	i	F_{Ra} [N]	f_B	typ motoreduktora *gearmotor type*
75.0kW					
72	9890	20.44	67900	1.20	MDR147D280S4 MDRF147D280S4
82	8730	18.04	69500	1.20	
95	7570	15.64	70800	1.70	
106	6730	13.91	71600	1.85	
123	5800	11.99	72400	2.2	MDR147D280S4 MDRF147D280S4
152	4710	9.74	73100	2.8	
179	4000	8.26	73500	3.3	
204	3510	7.25	73100	2.5	
251	2850	5.89	70100	3.0	
296	2420	5.00	67600	3.6	
90.0kW					
18.8	42969	78.71	159000	1.16	MDR187D280M4
22.4	36112	66.15	147000	1.38	
25.8	31267	57.28	137500	1.60	
31.0	26055	47.73	126100	1.92	
33.1	24431	44.75	116600	2.05	
36.4	22167	40.61	112700	2.26	
25.7	31393	57.51	117000	1.02	MDR177D280M4
31.1	26011	47.65	107400	1.23	
36.4	22202	40.67	99700	1.44	
45.8	17633	32.30	93700	1.81	
51.4	15733	28.82	88600	2.03	
60.3	13407	24.56	81700	2.39	
37	23200	39.92	120000	0.80	MDR167D280M4 MDRF167D280M4
43	20000	34.41	120000	0.90	
53	16200	27.96	120000	1.10	
62	13800	23.71	120000	1.30	
60	14300	24.57	120000	1.00	MDR167D280M4 MDRF167D280M4
68	12700	21.85	120000	1.00	
78	11100	19.03	120000	1.45	
87	9860	16.98	120000	1.50	MDR167D280M4 MDRF167D280M4
102	8410	14.48	117300	2.1	
123	6960	11.99	113500	2.4	
145	5940	10.24	110100	2.9	
72	11900	20.44	64800	1.00	MDR147D280M4 MDRF147D280M4
82	10500	18.04	67100	1.00	
95	9080	15.64	69000	1.45	
106	8080	13.91	70200	1.55	
123	6960	11.99	71400	1.85	MDR147D280M4 MDRF147D280M4
152	5660	9.74	72500	2.3	
179	4800	8.26	73000	2.7	
204	4210	7.25	70900	2.1	
251	3420	5.89	68300	2.5	
296	2900	5.00	66100	3.0	

n_a [1/min]	M_a [Nm]	i	F_{Ra} [N]	f_B	typ motoreduktora *gearmotor type*
110kW					
18.8	52517	78.71	159000	0.95	MDR187D315S4
22.4	44137	66.15	147000	1.13	
25.8	38215	57.28	137500	1.31	
31.0	31846	47.73	126100	1.57	
33.1	29860	44.75	116600	1.67	
36.4	27093	40.61	112700	1.85	
42.3	23338	34.98	107200	2.14	
50.3	19614	29.40	99100	2.55	
31.1	31791	47.65	107400	1.01	MDR177D315S4
36.4	27135	40.67	99700	1.18	
45.8	21551	32.30	93700	1.48	
51.4	19229	28.82	88600	1.66	
60.3	16387	24.56	81700	1.95	
72.7	13578	20.35	74000	2.36	
85.2	11589	17.37	67900	2.76	
53	19800	27.96	117100	0.90	MDR167D315S4 MDRF167D315S4
63	16800	23.71	116900	1.05	
78	13500	19.03	115500	1.20	MDR167D315S4 MDRF167D315S4
87	12000	16.98	114300	1.25	
103	10200	14.48	112200	1.75	
124	8480	11.99	109300	2.0	
145	7240	10.24	106500	2.4	
132kW					
22.4	52821	66.15	147000	0.95	MDR187D315M4
25.9	45734	57.28	137500	1.09	
31.1	38112	47.73	126100	1.31	
33.2	35736	44.75	116600	1.40	
36.5	32424	40.61	112700	1.54	
42.4	27930	34.98	107200	1.79	
50.5	23473	29.40	99100	2.13	
58.3	20323	25.45	90200	2.34	
36.5	32475	40.67	99700	0.99	MDR177D315M4
45.9	25791	32.30	93700	1.24	
51.5	23013	28.82	88600	1.39	
60.4	19611	24.56	81700	1.63	
72.9	16249	20.35	74000	1.97	
85.4	13870	17.37	67900	2.31	

n_a [1/min]	M_a [Nm]	i	F_{Ra} [N]	f_B	typ motoreduktora *gearmotor type*
132kW					
63	20100	23.71	107900	0.90	MDR167D315M4 MDRF167D315M4
78	16200	19.03	108300	1.00	MDR167D315M4 MDRF167D315M4
87	14400	16.98	107800	1.05	
103	12300	14.48	106700	1.45	
124	10200	11.99	104700	1.65	
145	8690	10.24	102600	1.95	
160kW					
25.9	55435	57.28	137500	0.90	MDR187D315M4a
31.1	46196	47.73	126100	1.08	
42.4	33854	34.98	107200	1.48	
50.5	28452	29.40	99100	1.76	
58.3	24634	25.45	90200	1.93	
70.0	20529	21.21	86800	2.13	
82.1	17503	18.08	84000	2.37	
60.4	23771	24.56	81700	1.35	MDR177D315M4a
72.9	19696	20.35	74000	1.62	
85.4	16812	17.37	67900	1.90	
130.5	11236	11.37	68000	2.85	MDR177D315M4a
154.6	9489	9.60	64000	3.27	
103	14900	14.48	99700	1.20	MDR167D315M4a MDRF167D315M4a
124	12300	11.99	98900	1.40	
145	10500	10.24	97600	1.60	
200KW					
42.43	42318	34.98	107200	1.18	MDR187D315M4b
50.48	35565	29.40	99100	1.41	
58.31	30793	25.45	90200	1.55	
69.97	25661	21.21	86800	1.71	
82.06	21879	18.08	84000	1.89	
94.03	19501	15.78	159000	2.56	MDR187D315M4b
111.88	16389	13.26	147000	2.93	
60.42	29714	24.56	81700	1.08	MDR177D315M4b
72.92	24620	20.35	74000	1.30	
85.43	21015	17.37	67900	1.52	
130.55	14045	11.37	68000	2.28	MDR177D315M4b
154.58	11862	9.60	64000	2.61	

n_a [1/min]	M_a [Nm]	i	F_{Ra} [N]	f_B	typ motoreduktora *gearmotor type*
250KW					
42.51	52790	34.98	107200	0.95	
50.58	44366	29.40	99100	1.13	
58.42	38413	25.45	90200	1.24	MDR187D355M4
70.11	32011	21.21	86800	1.37	
82.23	27294	18.08	84000	1.52	
94.22	24327	15.78	159000	2.06	
112.11	20445	13.26	147000	2.35	
129.48	17702	11.48	137500	2.71	MDR187D355M4
155.38	14751	9.57	126100	3.05	
182.23	12577	8.16	116000	3.58	
73.07	30713	20.35	74000	1.04	MDR177D355M4
85.61	26216	17.37	67900	1.22	
130.81	17521	11.37	68000	1.83	
154.90	14797	9.60	64000	2.1	MDR177D355M4
181.56	12624	8.19	62000	2.3	

5.5. Wymiary
5.5. Dimensions

MDR17..~MDR167..

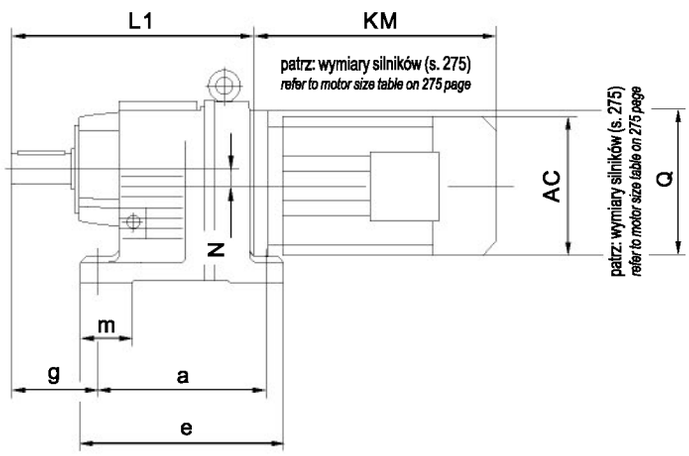

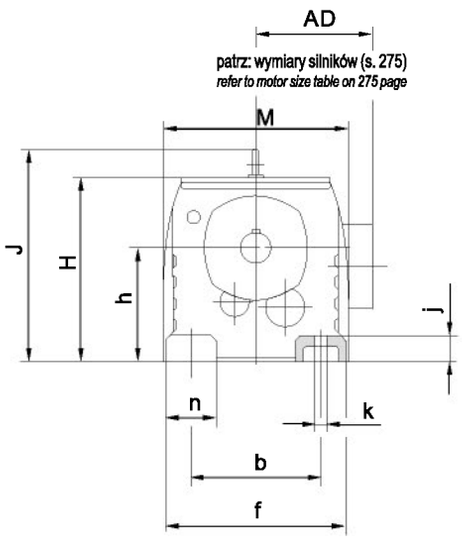

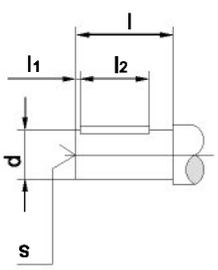

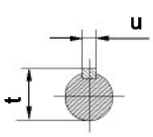

MDR17F..~MDR87F..

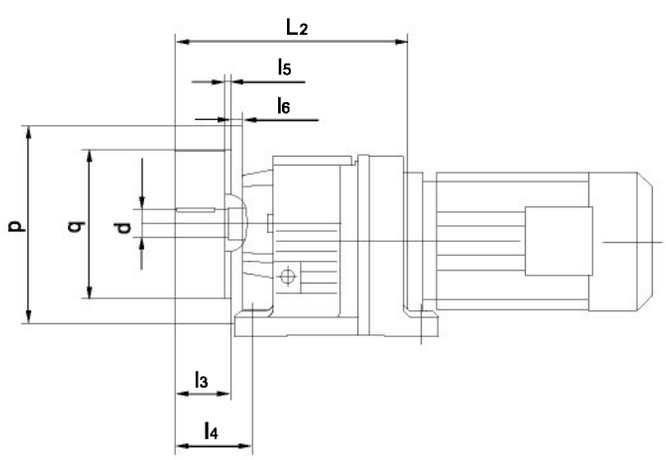

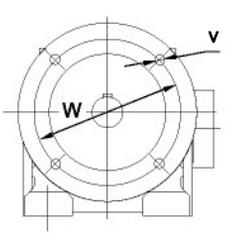

Wielkość *size*	a b	e f	g	h	j	k	m n	Wymiary wału *(shaft dimension)*				
								d	l	l_1 l_2	s	t u
MDR17.. MDR17F..	110 110	131 135	58	$75_{-0.5}$	12	9	28 25	20k6	40	4 32	M6	22.5 6
MDR27.. MDR27F..	130 110	152 145	75	$90_{-0.5}$	18	9	27 32	25k6	50	3.5 40	M10	28 8
MDR37.. MDR37F..	130 110	160 145	75	$90_{-0.5}$	18	9	40 35	25k6	50	3.5 40	M10	28 8
MDR47.. MDR47F..	165 135	195 170	90	$115_{-0.5}$	24	13.5	50 42	30k6	60	3.5 50	M10	33 8
MDR57.. MDR57F..	165 135	200 190	100	$115_{-0.5}$	24	13.5	60 55	35k6	70	7 56	M12	38 10
MDR67.. MDR67F..	195 150	235 210	100	$130_{-0.5}$	30	14	60 60	35k6	70	7 56	M12	38 10
MDR77.. MDR77F..	205 170	245 230	115	$140_{-0.5}$	30	17.5	60 60	40k6	80	5 70	M16	43 12
MDR87.. MDR87F..	260 215	310 290	140	$180_{-0.5}$	45	17.5	90 75	50k6	100	10 80	M16	53.5 14

Wielkość *size*	Wymiary kołnierza *(flange dimension)*					H	J	L_1	L_2	M	N	Q
	p q	l_3	l_4	l_5 l_6	v w							
MDR17.. MDR17F..	120 80j6	40	66	3 8	6.5 100	134	/	207	215	140	0	/
MDR27.. MDR27F..	120 80j6	50	81	3 8	6.5 100	147	/	193	199	151	3.4	120
MDR37.. MDR37F..	120 80j6	50	81	3 8	6.6 100	151	/	201	207	145	10.1	120
MDR47.. MDR47F..	140 95j6	60	90	3 10	9 115	187	/	235	235	178	14	160
MDR57.. MDR57F..	160 110j6	70	100	3.5 10	9 130	187	/	257	257	202	11.2	160
MDR67.. MDR67F..	200 130j6	70	100	3.5 12	11 165	212	243	280	280	215	20.7	160
MDR77.. MDR77F..	250 180j6	80	115	4 15	13.5 215	228	269	300	300	235	15.9	200
MDR87.. MDR87F..	300 230j6	100	140	4 16	13.5 265	295	345	372	372	297	12.6	250

Wielkość *size*	a b	e f	g	h	j	k	m n	Wymiary wału *(shaft dimension)*					H	J	L_1 M	N	Q
								d	l	l_1 l_2	s	t u					
MDR97..	310 250	365 340	160	$225_{-0.5}$	55	22	100 90	60m6	120	5 110	M20	64 18	368	418	440 348	10.2	300
MDR107..	370 290	440 400	185	$250_{-0.5}$	65	26	125 110	70m6	140	7.5 125	M20	74.5 20	408	475	495 409	20.4	350
MDR137..	410 340	490 450	220	315_{-1}	70	33	130 110	90m6	170	5 160	M24	95 25	495	562	589 458	25.1	400
MDR147..	500 380	590 530	260	355_{-1}	80	39	150 150	110m6	210	15 180	M24	116 28	565	637	695 540	33.4	450
MDR167..	580 500	670 660	270	425_{-1}	100	39	160 160	120m6	210	5 200	M24	127 32	675	749	790 670	59.9	550

MDRF17..~MDRF167..

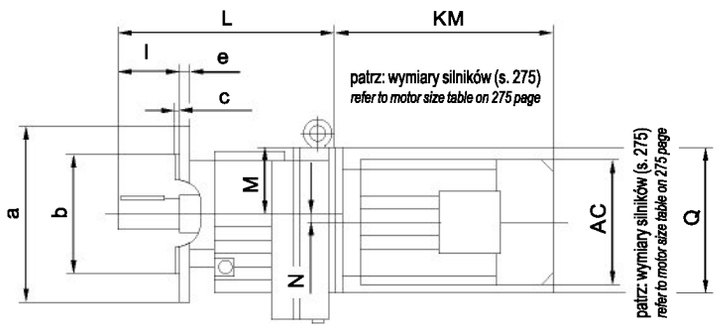

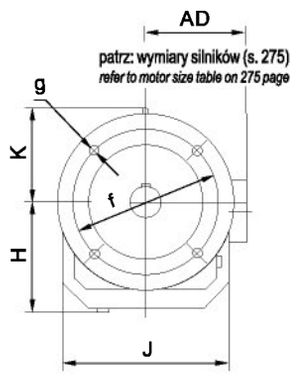

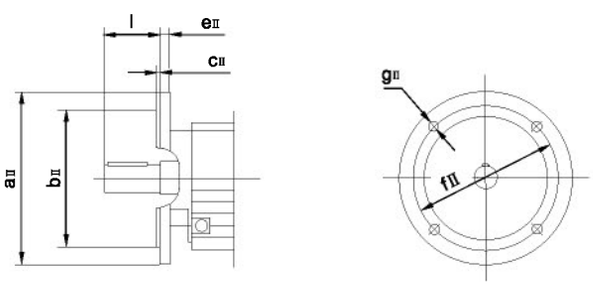

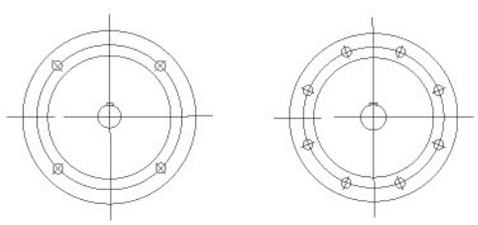

Fig.1 Fig.2

wersja kołnierzowa
flange form

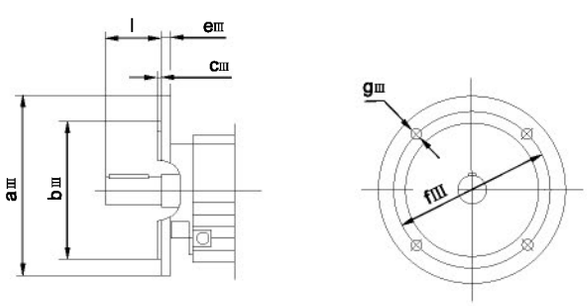

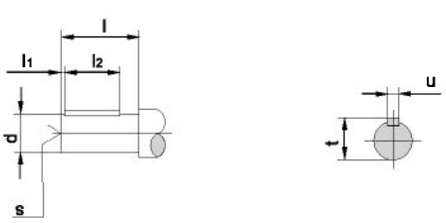

Wielkość *size*	Kołnierz *flange*	a a II a III	b b II b III	c c II c III	e e II e III	f f II f III	g g II g III	H J K	L M N	Q	Wymiary wału *(shaft dimension)*				
											d	l	l_1 l_2	s	t u
MDRF17..	Flg.1	120 140 /	80j6 95j6 /	3 3 /	8 9 /	100 115 /	6.5 8.5 /	76 130 /	215 59 0	/	20k6	40	4 32	M6	22.5 6
MDRF27..	Flg.1	120 140 160	80j6 95j6 110j6	3 3 3.5	8 9 10	100 115 130	6.5 8.5 8.5	92 142 /	199 57 3.4	120	25k6	50	3.5 40	M10	28 8
MDRF37..	Flg.1	120 160 200	80j6 110j6 130j6	3 3.5 3.5	8 10 12	100 130 165	6.6 9 11	94 161 /	207 61 10.1	120	25k6	50	3.5 40	M10	28 8
MDRF47..	Flg.1	140 160 200	95j6 110j6 130j6	3 3.5 3.5	10 10 12	115 130 165	9 9 11	118 178 /	235 72 14	160	30k6	60	3.5 50	M10	33 8
MDRF57..	Flg.1	160 200 250	110j6 130j6 180j6	3.5 3.5 4	10 12 15	130 165 215	9 11 13.5	121 202 /	257 72 11.2	160	35k6	70	7 56	M12	38 10
MDRF67..	Flg.1	200 250 /	130j6 180j6 /	3.5 4 /	12 15 /	165 215 /	11 13.5 /	134 215 113	280 82 20.7	160	35k6	70	7 56	M12	38 10
MDRF77..	Flg.1	250 300 /	180j6 230j6 /	4 4 /	15 18.5 /	215 265 /	13.5 13.5 /	144 235 129	300 88 15.9	200	40k6	80	5 70	M16	43 12
MDRF87..	Flg.1	300 350 /	230j6 250h6 /	4 5 /	16 18 /	265 300 /	13.5 17.5 /	184 297 165	372 115 12.6	250	50k6	100	10 80	M16	53.5 14
MDRF97..	Flg.1 Flg.2 /	350 450 /	250h6 350h6 /	5 5 /	18 22 /	300 400 /	17.5 17.5 /	230 348 193	440 144 10.2	300	60m6	120	5 110	M20	64 18
MDRF107..	Flg.1 Flg.2 /	350 450 /	250h6 350h6 /	5 5 /	20 22 /	300 400 /	17.5 17.5 /	255 409 224	495 158 20.4	350	70m6	140	7.5 125	M20	74.5 20
MDRF137..	Flg.2	450 550 /	350h6 450h6 /	5 5 /	22 25 /	400 500 /	17.5 17.5 /	320 458 247	589 180 25.1	400	90m6	170	5 160	M24	95 25
MDRF147..	Flg.2	450 550 /	350h6 450h6 /	5 5 /	22 25 /	400 500 /	17.5 17.5 /	361 540 285	695 210 33.4	450	110m6	210	15 180	M24	116 28
MDRF167..	Flg.2	550 660 /	450h6 550h6 /	5 6 /	25 28 /	500 600 /	17.5 22 /	430 670 324	790 250 59.9	550	120m6	210	5 200	M24	127 32

MDRX57..~MDRX107..

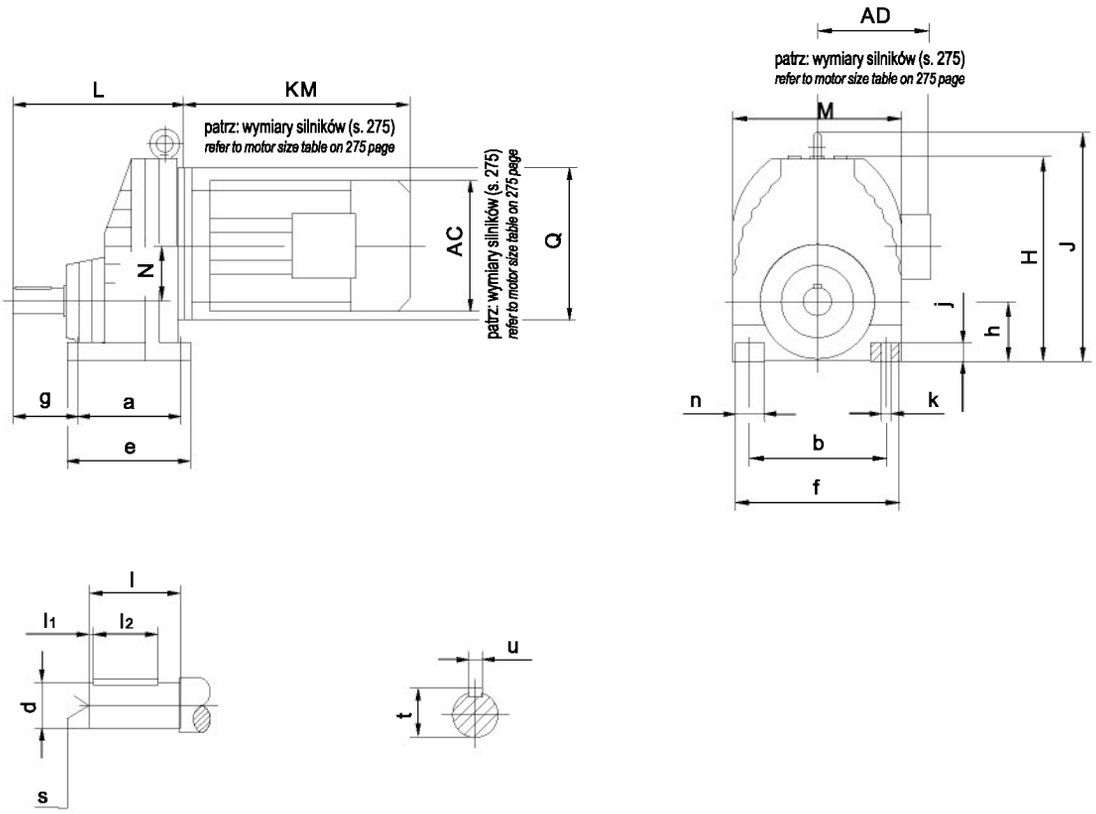

Wielkość *size*	a b	e f	g	h	j	k	n	Wymiary wału *(shaft dimension)* d	l	l_1 l_2	s	t u	H	J	L M	N	Q
MDRX57..	110 125	137 156	56	$63_{-0.5}$	18	11	31	20k6	40	3.5 32	M6	22.5 6	202	/	174 162	52	160
MDRX67..	120 135	150 170	75	$80_{-0.5}$	20	13.5	35	25k6	50	3.5 40	M10	28 8	226	/	201 176	60	160
MDRX77..	150 170	190 204	85	$90_{-0.5}$	25	17.5	50	30k6	60	3.5 50	M10	33 8	271	311	227 210	72	200
MDRX87..	160 215	206 266	110	$100_{-0.5}$	30	17.5	60	40k6	80	5 70	M16	43 12	332	372	269 272	93.5	250
MDRX97..	185 250	240 320	140	$112_{-0.5}$	35	22	70	50k6	100	10 80	M16	53.5 14	393	440	316 328	116	300
MDRX107..	210 310	260 360	152	$140_{-0.5}$	45	22	80	60m6	120	5 110	M20	64 18	459	506	364 370	130	350

MDRXF57..~MDRXF107..

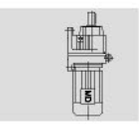

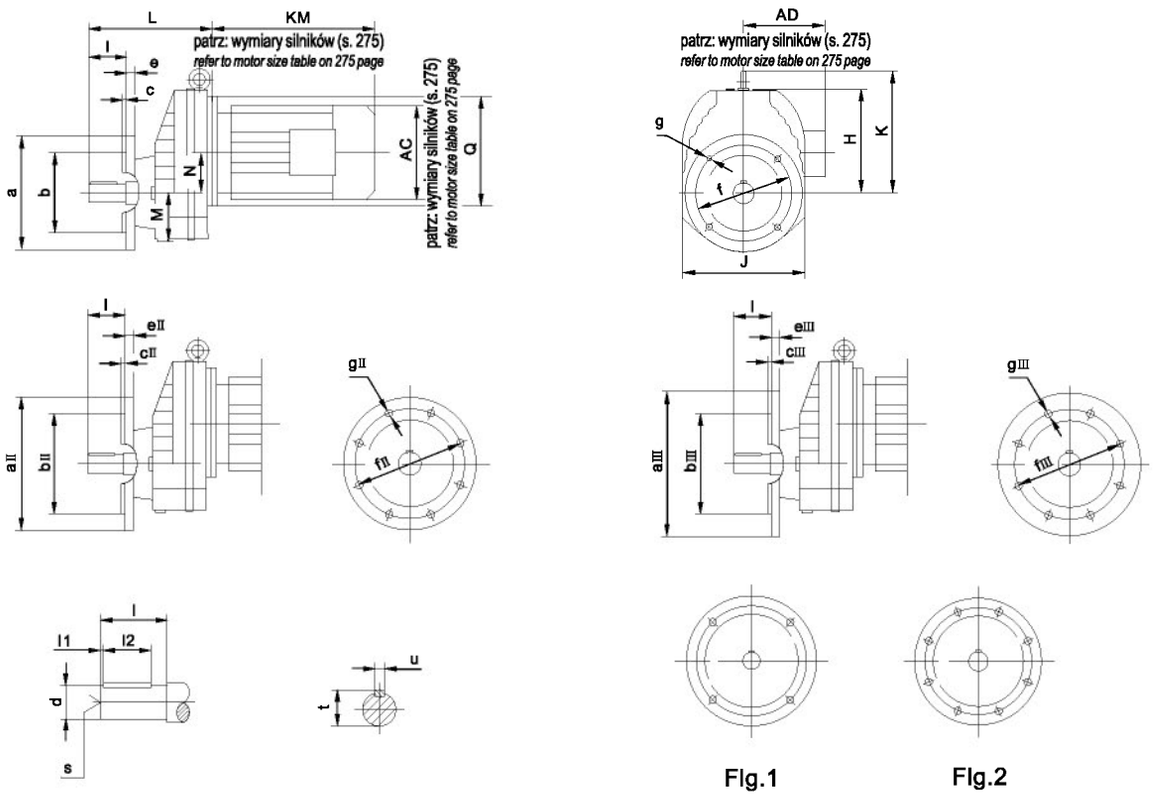

Flg.1 Flg.2

wersja kołnierzowa
flange form

Wielkość *size*	Kołnierz *flange*	a a II a III	b b II b III	c c II c III	e e II e III	f f II f III	g g II g III	H J K	L M N	Q	Wymiary wału *(shaft dimension)*				
											d	l	l_1 l_2	s	t u
MDRXF57..	Flg.1	140 160 200	95j6 110j6 130j6	3 3.5 3.5	10 10 12	115 130 165	9 9 11	139 162 /	174 62 52	160	20k6	40	5 32	M6	22.5 6
MDRXF67..	Flg.1	160 200 250	110j6 130j6 180j6	3.5 3.5 4	10 12 15	130 165 215	9 11 13.5	147 175 /	201 70 60	160	25k6	50	3.5 40	M10	28 8
MDRXF77..	Flg.1	200 250 /	130j6 180j6 /	3.5 4 /	12 15 /	165 215 /	11 13.5 /	181 210 221	227 78 72	200	30k6	60	3.5 50	M10	33 8
MDRXF87..	Flg.1	250 300 /	180j6 230j6 /	4 4 /	15 16 /	215 265 /	13.5 13.5 /	232 272 272	269 98 93.5	250	40k6	80	5 70	M16	43 12
MDRXF97..	Flg.1	300 350 /	230j6 250h6 /	4 5 /	16 18 /	265 300 /	13.5 17.5 /	281 328 328	316 118 116	300	50k6	100	10 80	M16	53.5 14
MDRXF107..	Flg.1 Flg.2 /	350 450 /	250h6 350h6 /	5 5 /	18 22 /	300 400 /	17.5 17.5 /	319 370 366	364 135 130	350	60m6	120	5 110	M20	64 18

MDR177...

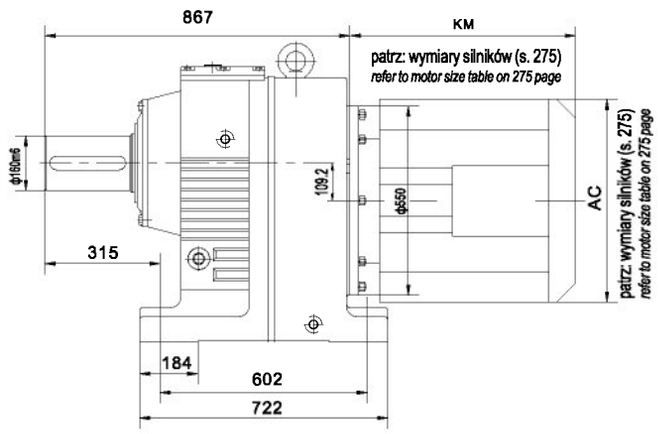

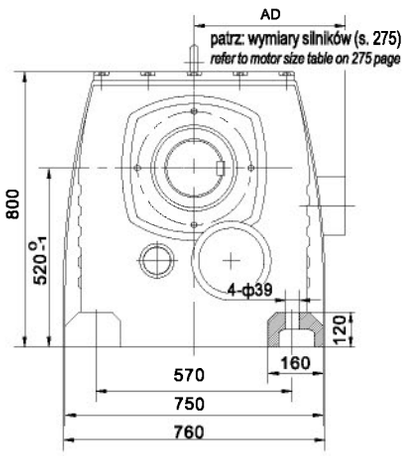

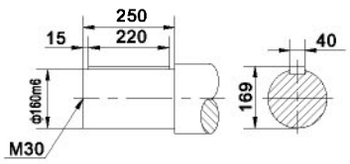

MDR187...

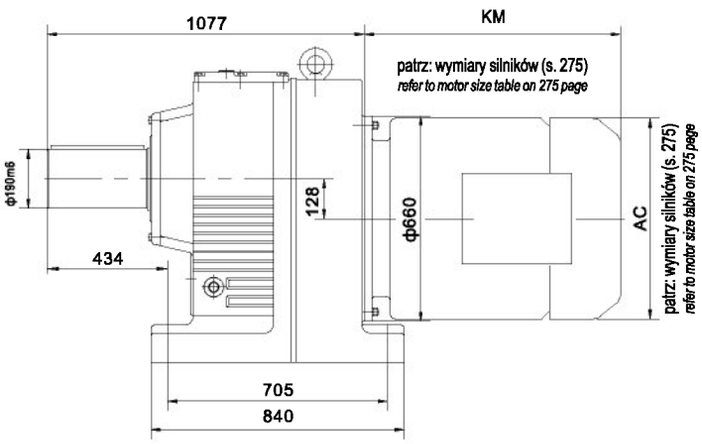

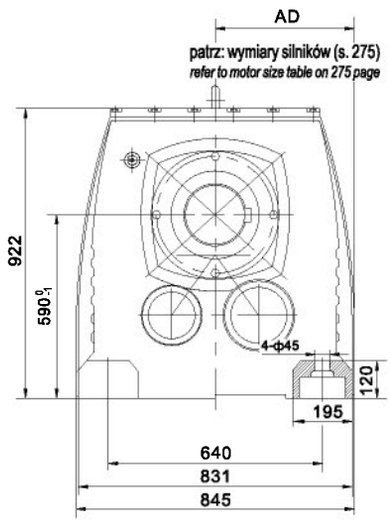

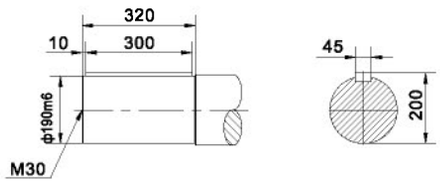

MDR..AD..

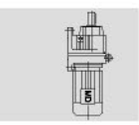

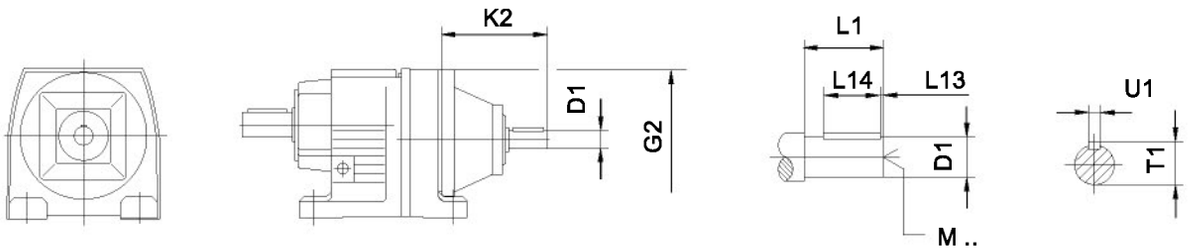

Wielkość *(size)*		G2	K2	D1	L1	L13	L14	T1	U1	M
MDR..27 MDR..37	AD1	120	102	16k6	40	4	32	18	5	M5
	AD2		130	19k6	40	4	32	21.5	6	M6
MDR..47 MDR..57 MDR..67	AD2	160	123	19k6	40	4	32	21.5	6	M6
	AD3		159	24k6	50	5	40	27	8	M8
MDR..77	AD2	200	116	19k6	40	4	32	21.5	6	M6
	AD3		151	24k6	50	5	40	27	8	M8
	AD4		224	38k6	80	5	70	41	10	M12
MDR..87	AD2	250	111	19k6	40	4	32	21.5	6	M6
	AD3		156	28k6	60	5	50	31	8	M10
	AD4		219	38k6	80	5	70	41	10	M12
	AD5		292	42k6	110	10	70	45	12	M16
MDR..97	AD3	300	151	28k6	60	5	50	31	8	M10
	AD4		214	38k6	80	5	70	41	10	M12
	AD5		287	42k6	110	10	70	45	12	M16
	AD6		327	48k6	110	10	80	51.5	14	M16
MDR..107	AD3	350	145	28k6	60	5	50	31	8	M10
	AD4		208	38k6	80	5	70	41	10	M12
	AD5		281	42k6	110	10	70	45	12	M16
	AD6		321	48k6	110	10	80	51.5	14	M16
MDR..137	AD4	400	201	38k6	80	5	70	41	10	M12
	AD5		274	42k6	110	10	70	45	12	M16
	AD6		314	48k6	110	10	80	51.5	14	M16
	AD7		308	55m6	110	10	90	59	16	M20
MDR..147	AD4	450	193	38k6	80	5	70	41	10	M12
	AD5		266	42k6	110	10	70	45	12	M16
	AD6		306	48k6	110	10	80	51.5	14	M16
	AD7		300	55m6	110	10	90	59	16	M20
	AD8		383	70m6	140	15	110	74.5	20	M20
MDR..167 MDR..177	AD5	550	258	42k6	110	15	70	45	12	M16
	AD6		298	48k6	110	10	80	51.5	14	M16
	AD7		292	55m6	110	10	90	59	16	M20
	AD8		374	70m6	140	15	110	74.5	20	M20
MDR..187	AD6	660	298	48 k6	110	10	80	51.5	14	M16
	AD7		292	55 m6	110	10	90	59	16	M20
	AD8		374	70 m6	140	15	110	74.5	20	M20

MDR..AM..

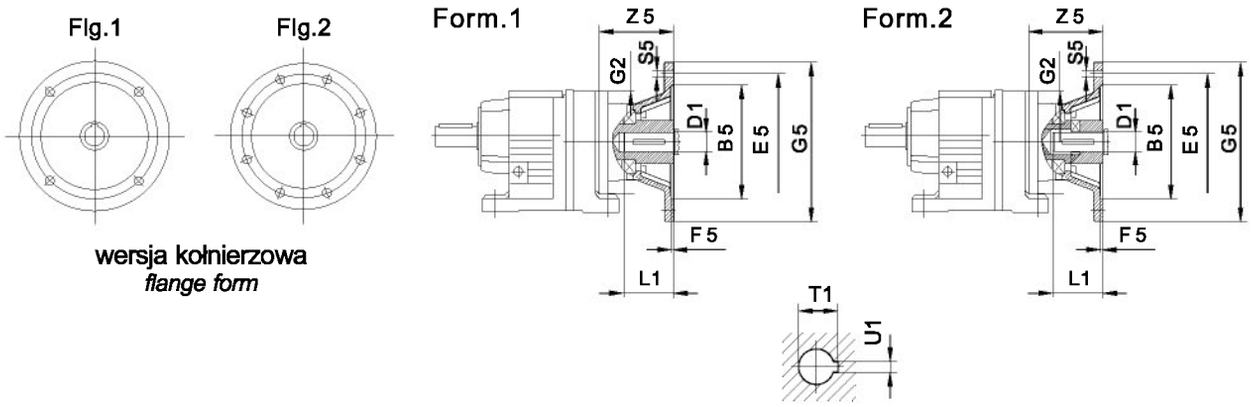

wersja kołnierzowa
flange form

Wielkość *(size)*	IEC B5	Flg	Form	B5	E5	F5	G2	G5	S5	Z5	D1	L1	T1	U1
MDR..27 MDR..37	AM63	1	1	95G7	115	4.5	120	140	M8	72	11F7	23	12.8	4
	AM71[1)]			110G7	130			160		92.5	14F7	30	16.3	5
	AM80[1)]			130G7	165			200	M10	118	19F7	40	21.8	6
	AM90[1)]										24F7	50	27.3	8
MDR..47 MDR..57 MDR..67	AM63	1	1	95G7	115	4.5	160	140	M8	66	11F7	23	12.8	4
	AM71			110G7	130			160		87	14F7	30	16.3	5
	AM80			130G7	165			200	M10	113	19F7	40	21.8	6
	AM90										24F7	50	27.3	8
	AM100[1)]		2	180G7	215	5		250	M12	144	28H7	60	31.3	8
	AM112[1)]													
	AM132			230G7	265			300		177	38H7	80	41.3	10
MDR..77	AM63[1)]	1	1	95G7	115	4.5	200	140	M8	60	11F7	23	12.8	4
	AM71			110G7	130			160		79	14F7	30	16.3	5
	AM80			130G7	165			200	M10	105	19F7	40	21.8	6
	AM90										24F7	50	27.3	8
	AM100[1)]		2	180G7	215	5		250	M12	136	28H7	60	31.3	8
	AM112[1)]													
	AM132S[1)]			230G7	265			300		196	38H7	80	41.3	10
	AM132M[1)]													
	AM132ML[1)]													
MDR..87	AM80	1	1	130G7	165	4.5	250	200	M10	100	19F7	40	21.8	6
	AM90										24F7	50	27.3	8
	AM100		2	180G7	215	5		250	M12	131	28H7	60	31.3	8
	AM112													
	AM132S			230G7	265			300		191	38H7	80	41.3	10
	AM132M													
	AM132ML													
	AM160[1)]			250G7	300	6		350	M16	236	42H7	110	45.3	12
	AM180[1)]										48H7		51.8	14
MDR..97	AM100	1	2	180G7	215	5	300	250	M12	126	28H7	60	31.3	8
	AM112													
	AM132S			230G7	265			300		186	38H7	80	41.3	10
	AM132M													
	AM132ML													
	AM160			250G7	300	6		350	M16	231	42H7	110	45.3	12
	AM180										48H7		51.8	14
	AM200		1	300G7	350	7		400		268	55F7		59.3	16
	AM225[1)]	2	2	350G7	400	6		450		303	60H7	140	64.4	18

1) Obrys zewnętrzny kołnierza może wystawać poza płaszczyznę montażu łap (porównać średnicę kołnierza ze wzniosem wału).
Dimension G5/2 may protrude past foot mounting surface if mounted on a foot-mounted gear unit, please check.

MDR..AM..

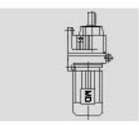

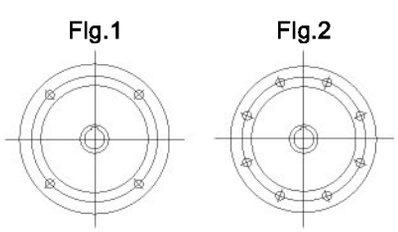

wersja kołnierzowa
flange form

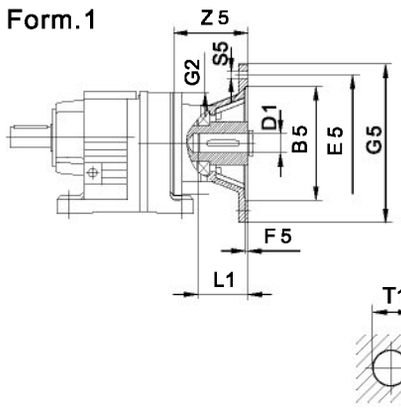

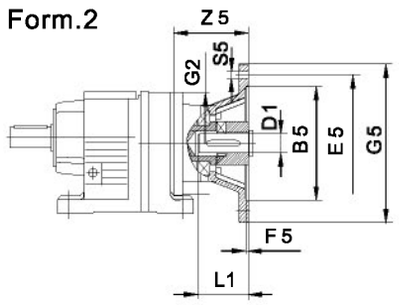

Wielkość *(size)*	IEC B5	Flg	Form	B5	E5	F5	G2	G5	S5	Z5	D1	L1	T1	U1
MDR..107	AM100	1	2	180G7	215	5	350	250	M12	120	28H7	60	31.3	8
	AM112													
	AM132S			230G7	265			300		180	38H7	80	41.3	10
	AM132M													
	AM132ML													
	AM160			250G7	300	6		350	M16	225	42H7	110	45.3	12
	AM180										48H7		51.8	14
	AM200		1	300G7	350	7		400		262	55F7		59.3	16
	AM225	2	2	350G7	400	6		450		297	60H7	140	64.4	18
MDR..137	AM132S	1	2	230G7	265	5	400	300	M12	173	38H7	80	41.3	10
	AM132M													
	AM132ML													
	AM160			250G7	300	6		350	M16	218	42H7	110	45.3	12
	AM180										48H7		51.8	14
	AM200		1	300G7	350	7		400		255	55F7		59.3	16
	AM225	2	2	350G7	400	6		450		290	60H7	140	64.4	18
MDR..147	AM132S	1	2	230G7	265	5	450	300	M12	165	38H7	80	41.3	10
	AM132M													
	AM132ML													
	AM160			250G7	300	6		350	M16	210	42H7	110	45.3	12
	AM180										48H7		51.8	14
	AM200		1	300G7	350	7		400		247	55F7.		59.3	16
	AM225	2	2	350G7	400	6		450		282	60H7	140	64.4	18
	AM250			450G7	500	7		550		336	65H7		69.4	
	AM280										75H7		79.9	20
MDR..167	AM132	1	2	230G7	265	5	550	300	M12	165	38H7	80	41.3	10
	AM160			250G7	300	6		350	M16	202	42H7	110	45.3	12
	AM180										48H7		51.8	14
	AM200		1	300G7	350	7		400		239	55F7		59.3	16
	AM225	2	2	350G7	400	6		450		274	60H7	140	64.4	18
	AM250			450G7	500	7		550		328	65H7		69.4	
	AM280										75H7		79.9	20

MDR..R..

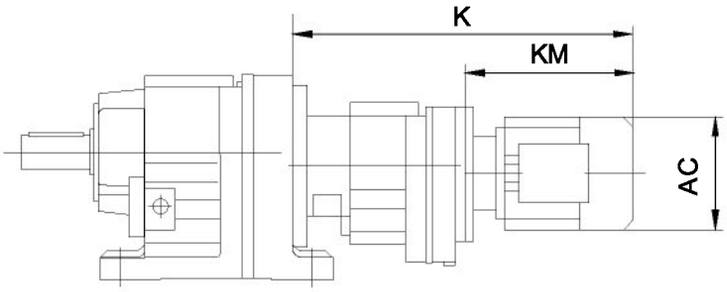

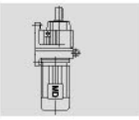

Wielkość *(size)*	Wielk. silnika *motor size*	AC	K	KM
MDR..27R17 MDR..37R17	DS63..	120	373	198
	DS71..	135	404	229
	DS80..	156	444	269
MDR..47R37 MDR..57R37 MDR..67R37	DS63..	120	363	198
	DS71..	135	394	229
	DS80..	156	434	269
MDR..77R37	DS63..	120	355	198
	DS71..	135	386	229
	DS80..	156	426	269
	DS90..	175	448	291
MDR..87R57	DS63..	120	408	192
	DS71..	135	438	222
	DS80..	156	478	262
	DS90..	175	500	284
MDR..97R57	DS63..	120	403	192
	DS71..	135	433	222
	DS80..	156	473	262
	DS90..	175	495	284
	DS100M	189	555	344
MDR..107R77	DS63..	120	433	186
	DS71..	135	462	215
	DS80..	156	502	255
	DS90..	175	524	277
	DS100M	189	584	337
	DS112M	221	628	383
	DS132S	221	628	383
	DS132M	221	678	433
	DS160..	271	718	471
MDR..137R77	DS63..	120	426	186
	DS71..	135	455	215
	DS80..	156	495	255
	DS90..	175	517	277
	DS100M	189	577	337
	DS112M	221	621	383
	DS132S	221	621	383
	DS132M	221	671	433
	DS160..	271	711	471

Wielkość *(size)*	Wielk. silnika *motor size*	AC	K	KM
MDR..147R77	DS63..	120	418	186
	DS71..	135	447	215
	DS80..	156	487	255
	DS90..	175	509	277
	DS100M	189	569	337
	DS112M	221	613	383
	DS132S	221	613	383
	DS132M	221	663	433
	DS160..	271	703	471
MDR..147R87	DS80..	156	530	250
	DS90..	175	552	272
	DS100M	189	612	332
	DS112M	221	656	378
	DS132S	221	656	378
	DS132M	221	706	428
	DS160..	271	746	466
	DS180M	380	897	617
	DS180L	420	945	665
MDR..167R97	DS90..	175	592	267
	DS100M	189	652	327
	DS112M	221	696	373
	DS132S	221	696	373
	DS132M	221	746	423
	DS160..	271	786	461
	DS180M	380	937	612
	DS180L	420	985	660
MDR..167R107	DS90L	175	643	261
	DS100M	189	703	321
	DS112M	221	747	367
	DS132S	221	747	367
	DS132M	221	797	417
	DS160..	271	837	455
	DS180M	380	988	606
	DS180L	420	1036	654
	DS200L	470	1042	660
	DS225S	470	1062	680
	DS225M	470	1087	705

Uwaga: Wymiary silnika podane w tabeli są tylko orientacyjne i zależą od dokładnego typu silnika.
Please note that the dimension of motor in the above table is only for reference.

6. **Seria MDF** - przekładnie płaskie
*6. **MDF series** - parallel shaft helical gearmotors*

6.1. Wersje przekładni
6.1. Versions of gearmotors

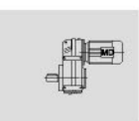

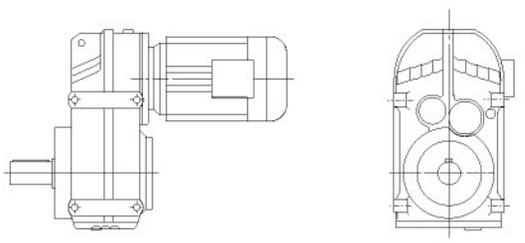

MDF..D..

Wał wyjściowy z wpustem, montaż łapowy
Output shaft with key, foot-mounted

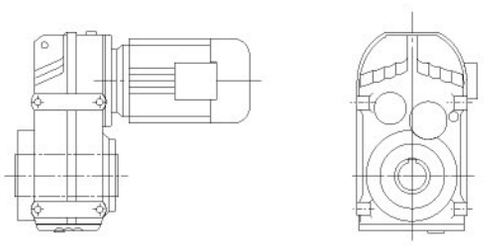

MDFA..B D..

Wał drążony z rowkiem wpustowym, montaż łapowy
Hollow shaft with key, foot-mounted

MDFV..B D..

Wał drążony z wielowypustem, montaż łapowy
Splined hollow shaft, foot-mounted

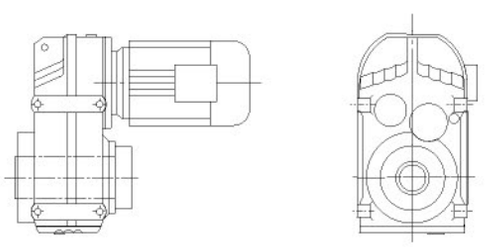

MDFH..B D..

Wał drążony z pierścieniem zaciskowym, montaż łapowy
Hollow shaft with shrink disk, foot-mounted

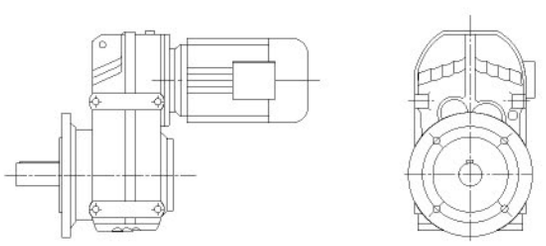

MDFF..D..

Wał pełny z wpustem, kołnierz B5
Solid shaft, B5 flange-mounted

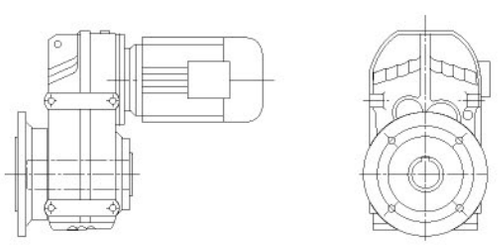

MDFAF..D..

Wał drążony z rowkiem wpustowym, kołnierz B5
Hollow shaft with key, B5 flange-mounted

MDFVF..D..

Wał drążony z wielowypustem, kołnierz B5
Splined hollow shaft, B5 flange-mounted

6.2. Kombinacje
6.2. Type of combination

Możliwe kombinacje wielkości przełożenia i silnika.
A combination table in each ratio range between gearbox and electric motor.

Wielkość przekładni *Gear unit size*	Ilość stopni *Stages*	D63 D71	D80	D90	D100	D112	D132S	D132M
MDF/FF/FA/FAF37	2	4.22-7.44 8.97-23.63	3.77-23.63	3.77-20.57	3.77-6.74 8.01-14.33 17.03			
MDF/FF/FA/FAF37	3	23.88-128.51	23.88-100.36	23.88-51.70 58.32-86.53	23.88-31.69 38.31 51.70 58.32 70.50			
MDF/FF/FA/FAF47	2	6.34-8.96 13.93-30.86	4.99-30.86	4.99-30.86	4.99-25.72			
MDF/FF/FA/FAF47	3	28.88-190.76	28.88-150.06	28.88-130.07	28.88-56.49 68.09-105.09			
MDF/FF/FA/FAF57	2	6.58-9.31 13.52-40.13	5.18-34.24	5.18-29.94	5.18-24.96	5.18-21.17	5.18-16.81	
MDF/FF/FA/FAF57	3	30.15-199.70	30.15-157.09	30.15-136.16	30.15-58.97 83.46-110.01	30.15-50.10 83.46-93.47		
MDF/FF/FA/FAF67	2	7.53-9.08 18.29-36.30	5.95-9.08 14.46-36.30	3.97-36.30	3.97-32.08	3.97-27.41	3.97-22.05	3.97-22.05
MDF/FF/FA/FAF67	3	43.20-228.99	34.01-195.39	34.01-170.85	34.01-142.40	34.01-67.65 90.59-120.79	34.01-53.73 90.59-95.94	34.01-53.73 90.59-95.94
MDF/FF/FA/FAF77	2	21.43-36.58	8.26-9.30 17.49-36.58	5.76-9.30 12.20-36.58	4.28-36.58	4.28-31.51	4.28-25.50	4.28-25.50
MDF/FF/FA/FAF77	3	48.37-72.50 94.93-281.71	38.23-225.79	25.54-198.31	25.54-166.47	25.54-142.27	25.54-58.32 75.02-114.45	25.54-58.32 75.02-114.45
MDF/FF/FA/FAF87	2		23.68-33.92	7.35-8.29 17.12-33.92	5.63-8.29 13.12-33.92	5.63-8.29 13.12-33.92	4.12-33.92	4.12-33.92
MDF/FF/FA/FAF87	3		109.49-270.68	39.30-50.36 76.39-270.68	29.20-228.93	29.20-197.20	29.20-159.61	29.20-159.61
MDF/FF/FA/FAF97	2			9.06 22.11-43.28	7.07-9.06 17.25-43.28	7.07-9.06 17.25-43.28	4.57-43.28	4.57-43.28
MDF/FF/FA/FAF97	3			58.06-72.29 80.31 89.85-97.58 112.99-276.77	44.49-72.29 80.31-276.77	44.49-72.29 80.31-276.77	32.50-223.88	32.50-223.88
MDF/FF/FA/FAF107	2				21.76-33.79	21.76-33.79	7.40-9.69 14.67-33.79	7.40-9.69 14.67-33.79
MDF/FF/FA/FAF107	3				58.12-83.99 92.47-254.40	58.12-83.99 92.47-254.40	37.61-254.40	37.61-254.40
MDF/FF/FA/FAF127	2							7.88-8.86 14.55-26.86
MDF/FF/FA/FAF127	3							37.28-170.83

Wielkość przekładni *Gear unit size*	Ilość stopni *Stages*	D160S	D160M	D160L	D180	D200
MDF/FF/FA/FAF77	2	4.28-19.70	4.28-19.70			
MDF/FF/FA/FAF77	3	25.54-43.58	25.54-43.58			
MDF/FF/FA/FAF87	2	4.12-26.50	4.12-26.50	4.12-26.50	4.12-21.32	
MDF/FF/FA/FAF87	3	29.20-123.29	29.20-123.29	29.20-123.29	29.20-50.36	
MDF/FF/FA/FAF97	2	4.57-33.91	4.57-33.91	4.57-33.91	4.57-27.44	4.57-22.11
MDF/FF/FA/FAF97	3	32.50-89.85 102.16-174.87	32.50-89.85 102.16-174.87	32.50-89.85 102.16-174.87	32.50-75.63 86.59 102.16-140.71	32.50-58.06 75.63 86.59 102.16-112.99
MDF/FF/FA/FAF107	2	6.22-9.69 12.33-33.79	6.22-9.69 12.33-33.79	6.22-9.69 12.33-33.79	6.22-33.79	6.22-27.57
MDF/FF/FA/FAF107	3	31.80-199.31	31.80-199.31	31.80-199.31	31.80-161.28	31.80-74.52 88.49 101.38-129.97
MDF/FF/FA/FAF127	2	6.80-8.86 12.54-26.86	6.80-8.86 12.54-26.86	6.80-8.86 12.54-26.86	5.52-26.86	4.68-26.86
MDF/FF/FA/FAF127	3	31.33-170.83	31.33-170.83	31.33-170.83	25.30-153.67	25.30-125.37
MDF/FF/FA/FAF157	2		16.85-53.55	16.85-53.55	13.96-43.94	11.92-35.75
MDF/FF/FA/FAF157	3		40.06-267.43	40.06-267.43	32.55-217.62	27.60-178.20
MDF/FH167	2	11.37–36.12	11.37–36.12	11.37–36.12	9.6–29.64	8.19–24.12
MDF/FH167	3	24.56–32.3 57.51–182.73	24.56–32.3 57.51–182.73	24.56–32.3 57.51–182.73	20.35–32.3 57.51–149.94	17.37–122

Wielkość przekładni *Gear unit size*	Ilość stopni *Stages*	D225	D250M	D280	D315	D315M-a/b
MDF/FF/FA/FAF107	2	6.22-27.57				
MDF/FF/FA/FAF107	3	31.80-74.52 88.49 101.38-129.97				
MDF/FF/FA/FAF127	2	4.68-26.86	4.68-21.38	4.68-21.38		
MDF/FF/FA/FAF127	3	25.30-125.37	25.30-55.31 75.41-98.95	25.30-55.31 75.41-98.95		
MDF/FF/FA/FAF157	2	11.92-35.75	11.92-28.60	11.92-28.60	11.92-22.16	11.92-16.85
MDF/FF/FA/FAF157	3	27.60-178.20	27.60-68.28 96.53-141.80	27.60-68.28 96.53-141.80	27.60-52.24 96.53-108.49	27.60-40.06
MDF/FH167	3	47.65–122.00	40.67–97.60	20.32–67.47	13.34–40.67	8.04–32.25
MDF/FH177	3	54.71–216.26	54.71–155.93	27.79–105.81	21.89–64.16	13.72–54.71
MDF/FH167	2	8.19–24.12	8.19–19.29	8.19–19.29	8.19–14.95	8.19–11.37
MDF/FH167	3	17.37–122	17.37–97.6	17.37–97.6	17.37–75.62	17.37–24.56 40.67–57.51

6.3. Przełożenia i momenty maksymalne

6.3. Ratio and max torque

MDF37-57 n_e=1400 1/min

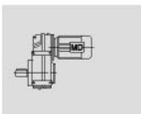

MDF37			200Nm	
i	n_a [1/min]	M_{amax} [Nm]	F_{Ra} [N]	AD
3-st.				
128.51	11	200	4290	AD1
117.88	12	200	4290	
100.36	14	200	4290	
86.53	16	200	4290	
80.65	17	200	4290	
70.50	20	200	4290	
66.09	21	200	4290	
58.32	24	200	4290	
54.54	26	200	4290	
51.70	27	200	4290	
47.02	30	200	4290	AD2
43.83	32	200	4290	
38.31	37	200	4290	
35.91	39	200	4290	
31.69	44	200	4290	
28.09	50	200	4060	
23.88	59	200	3760	
2-st.				
23.63	59	200	3740	AD2
20.57	68	200	3500	
19.27	73	200	3390	
17.03	82	200	3180	
15.81	89	200	3070	
14.33	98	200	2910	
12.87	109	200	2750	
11.08	126	190	2620	
10.42	134	185	2580	
8.97	156	175	2460	
8.01	175	170	2360	
7.44	188	145	2350	
6.74	208	140	2270	
6.05	231	135	2190	
5.21	269	125	2120	
4.90	286	120	2100	
4.22	332	110	2030	
3.77	372	105	1970	

MDF47			400Nm	
i	n_a [1/min]	M_{amax} [Nm]	F_{Ra} [N]	AD
3-st.				
190.76	7.3	400	5920	AD1
175.38	8.0	400	5920	
150.06	9.3	400	5920	
130.07	11	400	5920	
121.57	12	400	5920	
105.09	13	400	5920	
89.29	16	400	5920	
79.72	18	400	5920	
68.09	21	400	5920	
65.36	21	400	5920	AD2
56.49	25	400	5920	
48.00	29	400	5920	
42.86	33	400	5920	
36.61	38	400	5920	
34.29	41	400	5920	
28.88	48	400	5790	
2-st.				
30.86	45	400	5920	AD2
29.32	48	400	5830	
25.72	54	400	5470	
21.82	64	400	5030	
19.70	71	400	4770	
17.33	81	400	4450	
16.36	86	400	4320	
13.93	100	400	3950	
12.66	111	400	3740	
10.97	128	400	3440	
8.96	156	330	3250	
7.88	178	380	2630	
7.44	188	380	2530	
6.34	221	350	2470	
5.76	243	340	2390	
4.99	281	320	2310	

MDF57			600Nm	
i	n_a [1/min]	M_{amax} [Nm]	F_{Ra} [N]	AD
3-st.				
199.70	7.0	600	8200	AD2
183.60	7.6	600	8200	
157.09	8.9	600	8200	
136.16	10	600	8200	
127.27	11	600	8200	
110.01	13	600	8200	
93.47	15	600	8200	
83.46	17	600	8200	
72.98	19	600	8200	
68.22	21	600	8200	
58.97	24	600	8200	
50.10	28	600	8200	
44.73	31	600	8200	
38.21	37	600	8200	
35.79	39	600	8200	
30.15	46	590	7650	
2-st.				
40.13	35	290	9710	AD2
34.24	41	500	8670	
29.94	47	545	7890	
28.45	49	535	7760	
24.96	56	575	7060	
21.17	66	600	6350	AD3
19.11	73	600	6020	
16.81	83	600	5620	
15.88	88	600	5450	
13.52	104	600	4980	
12.29	114	600	4710	
10.64	132	600	4320	
9.31	150	420	4760	
8.19	171	420	4450	
7.73	181	420	4310	
6.58	213	420	3940	
5.98	234	420	3730	
5.18	270	415	3460	

MDF67-87 n_e=1400 1/min

MDF67 820Nm

i	n_a [1/min]	M_{amax} [Nm]	F_{Ra} [N]	AD
3-st.				
228.99	6.1	820	10300	AD2
195.39	7.2	820	10300	
170.85	8.2	820	10300	
162.31	8.6	820	10300	
142.40	9.8	820	10300	
120.79	12	820	10300	
109.04	13	820	10300	
95.94	15	820	10300	
90.59	15	820	10300	
79.76	18	820	10300	
67.65	21	820	10300	
61.07	23	820	10300	
53.73	26	820	10300	
50.74	28	820	10300	
43.20	32	820	10300	
39.26	36	780	10700	
34.01	41	740	11000	
2-st.				
36.30	39	820	10300	AD2
32.08	44	820	10300	AD3
27.41	51	820	10300	
25.13	56	820	10300	
22.05	63	820	10300	
20.90	67	820	10300	
18.29	77	820	10300	
16.48	85	820	10300	
14.46	97	820	10300	
12.76	110	820	10300	
11.31	124	820	10300	
9.66	145	820	10300	
9.08	154	530	11400	
8.60	163	570	10900	
7.53	186	610	10100	
6.78	206	620	9660	
5.95	235	610	9200	
5.25	267	590	8850	
4.66	300	560	8590	
3.97	353	500	8390	

MDF77 1500Nm

i	n_a [1/min]	M_{amax} [Nm]	F_{Ra} [N]	AD
3-st.				
281.71	5.0	1500	15700	AD2
262.93	5.3	1500	15700	
225.79	6.2	1500	15700	
198.31	7.1	1500	15700	
188.40	7.4	1500	15700	
166.47	8.4	1500	15700	
142.27	9.8	1500	15700	
130.42	11	1500	15700	
114.45	12	1500	15700	
108.46	13	1500	15700	
94.93	15	1500	15700	
85.52	16	1500	15700	
75.02	19	1500	15700	
72.50	19	1500	15700	
66.46	21	1500	15700	
58.32	24	1500	15700	
55.27	25	1500	15700	
48.37	29	1500	15700	
43.58	32	1500	15700	AD3
38.23	37	1500	15700	
33.74	41	1500	15700	
29.91	47	1500	15700	
25.54	55	1450	16100	
2-st.				
36.58	38	1110	17900	AD3
31.51	44	1380	16500	
28.75	49	1430	16200	
25.50	55	1500	15700	AD4
21.43	65	1500	15700	
19.70	71	1500	15700	
17.49	80	1500	15700	
15.64	90	1500	15700	
14.06	100	1500	15700	
12.20	115	1500	14900	
10.93	128	1500	14200	
9.30	151	1080	13800	
8.26	169	1080	13100	
7.39	189	1080	12500	
6.64	211	1080	12000	
5.76	243	1080	11300	
5.16	271	1080	10700	
4.28	327	1010	10200	

MDF87 3000Nm

i	n_a [1/min]	M_{amax} [Nm]	F_{Ra} [N]	AD
3-st.				
270.68	5.2	3000	19800	AD2
255.37	5.5	3000	19800	
228.93	6.1	3000	19800	
197.20	7.1	3000	19800	
179.97	7.8	3000	19800	
159.61	8.8	3000	19800	
134.16	10	3000	19800	
123.29	11	3000	19800	
109.49	13	3000	19800	
97.89	14	3000	19800	
88.01	16	3000	19800	
76.39	18	3000	19800	
68.40	20	3000	19600	AD3
56.75	25	3000	17700	
50.36	28	2940	16800	
45.28	31	2820	16200	
39.30	36	2720	15400	
35.19	40	2610	14900	AD4
29.20	48	2510	13800	
2-st.				
33.92	41	2610	14600	AD5
28.78	49	2450	13900	
26.50	53	3000	11100	
23.68	59	3000	10300	
21.32	66	3000	9530	
19.31	73	3000	8840	
17.12	82	3000	8040	
15.48	90	3000	7390	
13.12	107	3000	6370	
11.46	122	3000	5580	
9.58	146	2880	5050	
8.29	169	1530	8890	
7.35	190	1530	8280	
6.65	211	1530	7790	
5.63	248	1530	7020	
4.92	284	1530	6430	
4.12	340	1460	5980	

MDF97-127 n_e=1400 1/min

MDF97 4300Nm

i	n_a [1/min]	M_{amax} [Nm]	F_{Ra} [N]	AD
3-st.				
276.77	5.1	4300	29900	AD3
253.41	5.5	4300	29900	
223.88	6.3	4300	29900	
189.92	7.4	4300	29900	
174.87	8.0	4300	29900	
156.30	9.0	4300	29900	
140.71	9.9	4300	29900	
127.42	11	4300	29900	
112.99	12	4300	29900	
102.16	14	4300	29900	
97.58	14	4300	29900	
89.85	16	4300	29900	
86.59	16	4300	29900	
80.31	17	4300	29900	
75.63	19	4300	29900	
72.29	19	4300	29900	
65.47	21	4300	29900	AD4
58.06	24	4300	27200	
52.49	27	4300	25800	
44.49	31	4300	23600	
38.86	36	4300	21900	
32.50	43	4300	19800	
2-st.				
43.28	32	3070	27600	AD4
36.64	38	3070	25500	
33.91	41	4300	20300	AD5
30.39	46	4300	19000	
27.44	51	4300	17900	
24.92	56	4300	16800	
22.11	63	4300	15600	
20.07	70	4300	14600	
17.25	81	4300	13200	
15.06	93	4300	11900	
12.77	110	4300	10500	AD6
11.16	125	4100	10000	
9.06	154	2360	13600	
8.22	170	2360	12800	
7.07	198	2360	11700	
6.17	227	2250	11200	
5.23	268	2150	10600	
4.57	306	2050	10100	

MDF107 7840Nm

i	n_a [1/min]	M_{amax} [Nm]	F_{Ra} [N]	AD
3-st.				
254.40	5.5	7680	49800	AD3
215.37	6.5	7680	49800	
199.31	7.0	7680	49800	
178.64	7.8	7680	49800	
161.28	8.7	7680	49800	
146.49	9.6	7680	49800	
129.97	11	7680	49800	
117.94	12	7680	49800	
101.38	14	7680	49800	AD4
92.47	15	7680	49800	
88.49	16	7680	49800	
83.99	17	7680	49800	
74.52	19	7680	49800	
67.62	21	7680	49800	
58.12	24	7680	47800	
50.73	28	7680	45100	
43.03	33	7680	42000	AD5
37.61	37	7680	39500	
31.80	44	7680	36500	
2-st.				
33.79	41	7400	38300	AD6
27.57	51	7840	33700	
25.14	56	7840	32200	
21.76	64	7840	30000	
19.20	73	7840	28100	
16.58	84	7840	26000	
14.67	95	7680	24700	
12.33	114	7000	24300	
9.96	141	6500	22900	
9.69	144	4910	25400	
8.37	167	4800	24000	
7.40	189	4600	23200	
6.22	225	4600	21100	

MDF127 12000Nm

i	n_a [1/min]	M_{amax} [Nm]	F_{Ra} [N]	AD
3-st.				
170.83	8.2	12000	90000	AD4
153.67	9.1	12000	90000	
125.37	11	12000	90000	
114.34	12	12000	88000	
98.95	14	12000	83000	
87.31	16	12000	78900	
75.41	19	12000	74300	
70.07	20	12000	72100	AD5
63.91	22	12000	69400	
55.31	25	12000	65300	
48.80	29	12000	61800	
42.15	33	12000	57900	
37.28	38	12000	54800	AD6
31.33	45	12000	50600	AD7
25.30	55	12000	45700	
2-st.				
26.86	52	8500	55300	AD6
24.57	57	8500	53300	
21.38	65	12000	42000	AD8
18.87	74	11000	41900	
16.36	86	11000	39000	
14.55	96	11000	36200	
12.54	112	10000	36400	
10.19	137	9500	34000	
8.86	158	7000	36400	
7.88	178	6000	37000	
6.80	206	7000	32200	
5.52	254	6000	31700	
4.68	299	6000	29500	

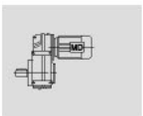

MDF157-177 n_e=1400 1/min

MDF157 18000Nm

i	n_a [1/min]	M_{amax} [Nm]	F_{Ra} [N]	AD
3-st.				
267.43	5.2	18000	100300	AD5
217.62	6.4	18000	100300	
178.20	7.9	18000	100300	
162.96	8.6	18000	100300	
141.80	9.9	18000	100300	
125.14	11	18000	100300	
108.49	13	18000	100300	
96.53	15	18000	100300	
85.80	16	18000	95700	
78.46	18	18000	92300	
68.28	21	18000	87000	
60.25	23	18000	82500	
52.24	27	18000	77500	AD6
46.48	30	18000	73600	AD7
40.06	35	18000	68900	
32.55	43	18000	62500	
27.60	51	18000	57800	AD8
2-st.				
53.55	26	8000	98300	AD5
43.94	32	10000	87800	AD6
35.75	39	11000	79300	
28.60	49	17000	60800	AD8
25.43	55	15000	61500	
22.16	63	18000	51800	
19.77	71	17000	50900	
16.85	83	18000	44900	
13.96	100	17000	42500	
11.92	117	16000	40900	

MDF167 32000 Nm

i	n_a [1/min]	M_{amax} [Nm]	F_{Ra} [N]	AD
3-st.				
182.73	7.66	32000	150000	AD5
149.94	9.34	32000	150000	
122.00	11.48	32000	150000	
97.60	14.34	32000	147200	AD6
86.80	16.13	32000	140100	AD7
75.62	18.51	32000	132000	
67.47	20.75	32000	125600	
57.51	24.35	32000	117000	AD8
47.65	29.38	32000	107400	
40.67	34.42	32000	99700	
32.30	43.34	32000	93700	
28.82	48.58	32000	88600	
24.56	57.00	32000	81700	
20.35	68.80	32000	74000	
17.37	80.60	32000	67900	
2-st.				
36.12	38.76	15000	145000	
29.64	47.23	18000	132000	
24.12	58.05	20000	120000	
19.29	72.57	31000	91000	
17.16	81.60	27000	92000	
14.95	93.66	32000	78000	
13.34	104.97	31000	77000	
11.37	123.16	32000	68000	
9.60	145.83	31000	64000	
8.19	170.94	29000	62000	

MDF177 50000 Nm

i	n_a [1/min]	M_{amax} [Nm]	F_{Ra} [N]	AD
3-st.				
216.26	6.7	50000	190000	AD3
195.39	7.4	50000	190000	
173.85	8.3	50000	190000	AD7
155.93	9.3	50000	190000	
135.39	11	50000	190000	
122.84	12	50000	190000	AD8
105.81	14	50000	190000	
88.93	16	50000	190000	
77.00	19	50000	190000	
64.16	23	50000	190000	
54.71	27	50000	190000	
42.65	34	50000	190000	
38.69	37	50000	190000	
33.33	44	50000	190000	
20.21	72	50000	188200	
17.23	84	50000	177200	
2-st.				
34.82	42	47600	177200	
30.98	47	47600	169900	
27.79	52	47600	159000	
24.25	60	47600	147000	
21.89	66	47600	137500	
18.86	77	43900	126100	
15.85	91	43900	116600	
13.72	106	43900	112700	
11.44	127	41400	99100	
9.75	149	41400	90200	

MDF37/47R17, MDF57R37 n_e=1400 1/min

MDF37R17				200Nm	
i	n_a [1/min]	Stopień *Stage* F37	R17	M_{amax} [Nm]	F_{Ra} [N]
8193	0.17	3	3	200	4290
7064	0.20	3	3	200	4290
6585	0.21	3	3	200	4290
5756	0.24	3	3	200	4290
4963	0.28	3	3	200	4290
4434	0.32	3	3	200	4290
3875	0.36	3	3	200	4290
3392	0.41	3	3	200	4290
2965	0.47	3	3	200	4290
2587	0.54	3	3	200	4290
2284	0.61	3	3	200	4290
1997	0.70	3	3	200	4290
1929	0.73	2	3	200	4290
1742	0.80	3	3	200	4290
1679	0.83	2	3	200	4290
1550	0.90	2	3	200	4290
1545	0.91	3	3	200	4290
1370	1.0	3	2	200	4290
1356	1.0	2	3	200	4290
1198	1.2	3	2	200	4290
1180	1.2	2	3	200	4290
1047	1.3	3	2	200	4290
1044	1.3	2	3	200	4290
915	1.5	3	2	200	4290
914	1.5	2	3	200	4290
808	1.7	2	3	200	4290
807	1.7	3	2	200	4290
707	2.0	3	2	200	4290
698	2.0	2	3	200	4290
617	2.3	3	2	200	4290
616	2.3	2	3	200	4290
544	2.6	2	3	200	4290
538	2.6	3	2	200	4290
477	2.9	3	2	200	4290
466	3.0	2	3	200	4290
412	3.4	3	2	200	4290
411	3.4	2	3	200	4290
365	3.8	3	2	200	4290
364	3.8	2	3	200	4290
326	4.3	2	2	200	4290
322	4.3	3	2	200	4290
285	4.9	2	2	200	4290
278	5.0	3	2	200	4290
250	5.6	2	2	200	4290
242	5.8	3	2	200	4290
221	6.3	3	2	200	4290
219	6.4	2	2	200	4290
195	7.2	3	2	200	4290
186	7.5	2	2	200	4290
168	8.3	3	2	200	4290
167	8.4	2	2	200	4290
147	9.5	3	2	200	4290
145	9.7	2	2	200	4290
129	11	2	2	200	4290
127	11	3	2	200	4290
121	12	3	2	200	4290
118	12	2	2	200	4290
108	13	3	2	200	4290
98	14	2	2	200	4290
91	15	3	2	200	4290
87	16	2	2	200	4290

MDF47R17				400Nm	
i	n_a [1/min]	Stopień *Stage* F47	R17	M_{amax} [Nm]	F_{Ra} [N]
12251	0.11	3	3	400	5920
10619	0.13	3	3	400	5920
9846	0.14	3	3	400	5920
8534	0.16	3	3	400	5920
7460	0.19	3	3	400	5920
6536	0.21	3	3	400	5920
5746	0.24	3	3	400	5920
5022	0.28	3	3	400	5920
4401	0.32	3	3	400	5920
3883	0.36	3	3	400	5920
3443	0.41	3	3	400	5920
2976	0.47	3	3	400	5920
2629	0.53	3	3	400	5920
2519	0.56	2	3	400	5920
2394	0.58	2	3	400	5920
2304	0.61	3	3	400	5920
2172	0.64	2	3	400	5920
2033	0.69	3	3	400	5920
2025	0.69	2	3	400	5920
1785	0.78	3	2	400	5920
1770	0.79	2	3	400	5920
1578	0.89	3	2	400	5920
1576	0.89	2	3	400	5920
1364	1.0	3	2	400	5920
1363	1.0	2	3	400	5920
1203	1.2	3	2	400	5920
1192	1.2	2	3	400	5920
1061	1.3	2	3	400	5920
1049	1.3	3	2	400	5920
931	1.5	2	3	400	5920
918	1.5	3	2	400	5920
822	1.7	2	3	400	5920
809	1.7	3	2	400	5920
706	2.0	2	3	400	5920
700	2.0	3	2	400	5920
622	2.3	3	2	400	5920
619	2.3	2	3	400	5920
543	2.6	3	2	400	5920
524	2.7	2	2	400	5920
489	2.9	2	2	400	5920
475	2.9	3	2	400	5920
427	3.3	2	2	400	5920
419	3.3	3	2	400	5920
381	3.7	2	2	400	5920
370	3.8	3	2	400	5920
334	4.2	2	2	400	5920
324	4.3	3	2	400	5920
295	4.7	2	2	400	5920
288	4.9	3	2	400	5920
253	5.5	2	2	400	5920
249	5.6	3	2	400	5920
218	6.4	3	2	400	5920
217	6.5	2	2	400	5920
193	7.3	3	2	400	5920
190	7.4	2	2	400	5920
178	7.9	2	2	400	5920
175	8.0	3	2	400	5920
149	9.4	2	2	400	5920
147	9.5	3	2	400	5920
131	11	2	2	400	5920
130	11	3	2	400	5920

MDF57R37				600Nm	
i	n_a [1/min]	Stopień *Stage* F57	R37	M_{amax} [Nm]	F_{Ra} [N]
14832	0.09	3	3	600	8200
13604	0.10	3	3	600	8200
12602	0.11	3	3	600	8200
11252	0.12	3	3	600	8200
9986	0.14	3	3	600	8200
8787	0.16	3	3	600	8200
7908	0.18	3	3	600	8200
6913	0.20	3	3	600	8200
6030	0.23	3	3	600	8200
5289	0.26	3	3	600	8200
4654	0.30	3	3	600	8200
4060	0.34	3	3	600	8200
3564	0.39	3	3	600	8200
3161	0.44	3	3	600	8200
2854	0.49	2	3	600	8200
2737	0.51	3	3	600	8200
2576	0.54	2	3	600	8200
2409	0.58	3	3	600	8200
2266	0.62	2	3	600	8200
2131	0.66	3	3	600	8200
2012	0.70	2	3	600	8200
1840	0.76	3	3	600	8200
1791	0.78	2	3	600	8200
1623	0.86	3	2	600	8200
1617	0.87	2	2	600	8200
1439	0.97	3	3	600	8200
1422	0.98	2	2	600	8200
1243	1.1	2	3	600	8200
1238	1.1	3	3	600	8200
1106	1.3	3	2	600	8200
1066	1.3	2	2	600	8200
967	1.4	3	3	600	8200
949	1.5	2	3	600	8200
856	1.6	2	2	600	8200
851	1.6	3	3	600	8200
749	1.9	2	2	600	8200
738	1.9	3	3	600	8200
658	2.1	2	2	600	8200
646	2.2	3	2	600	8200
558	2.5	3	3	600	8200
549	2.6	2	2	600	8200
506	2.8	3	3	600	8200
483	2.9	2	2	600	8200
452	3.1	3	3	600	8200
426	3.3	2	2	600	8200
386	3.6	3	2	600	8200
382	3.7	2	2	600	8200
338	4.1	3	2	600	8200
330	4.2	2	2	600	8200
298	4.7	2	2	600	8200
298	4.7	2	2	600	8200
262	5.3	2	2	600	8200
255	5.5	3	2	600	8200
226	6.2	2	2	600	8200
226	6.2	2	2	600	8200
201	7.0	3	2	600	8200
200	7.0	2	2	600	8200
181	7.7	3	2	600	8200
170	8.2	2	2	600	8200
155	9.0	3	2	600	8200
152	9.2	2	2	600	8200
134	10	2	2	600	8200

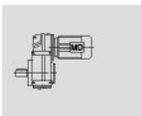

MDF67/77R37, MDF87R57 n =1400 1/min

MDF67R37 820Nm

i	n_a [1/min]	Stopień *Stage* F67	R37	M_{amax} [Nm]	F_{Ra} [N]
19199	0.07	3	3	820	10300
17610	0.08	3	3	820	10300
14992	0.09	3	3	820	10300
12926	0.11	3	3	820	10300
11480	0.12	3	3	820	10300
10220	0.14	3	3	820	10300
8933	0.16	3	3	820	10300
7940	0.18	3	3	820	10300
7096	0.20	3	3	820	10300
6080	0.23	3	3	820	10300
5341	0.26	3	3	820	10300
4690	0.30	3	3	820	10300
4091	0.34	3	3	820	10300
3574	0.39	3	3	820	10300
3377	0.41	2	3	820	10300
3133	0.45	3	3	820	10300
2912	0.48	2	3	820	10300
2756	0.51	3	3	820	10300
2714	0.52	2	3	820	10300
2439	0.57	3	3	820	10300
2372	0.59	2	3	820	10300
2126	0.66	2	3	820	10300
2106	0.66	3	2	820	10300
1884	0.74	3	2	820	10300
1859	0.75	2	3	820	10300
1635	0.86	3	2	820	10300
1631	0.86	2	3	820	10300
1437	0.97	2	3	820	10300
1429	0.98	3	2	820	10300
1271	1.1	3	2	820	10300
1256	1.1	2	3	820	10300
1126	1.2	2	3	820	10300
1102	1.3	3	2	820	10300
984	1.4	2	3	820	10300
970	1.4	3	2	820	10300
864	1.6	2	3	820	10300
858	1.6	3	2	820	10300
755	1.9	3	2	820	10300
722	1.9	2	3	820	10300
641	2.2	3	2	820	10300
634	2.2	2	3	820	10300
572	2.4	3	2	820	10300
539	2.6	2	3	820	10300
509	2.8	3	2	820	10300
500	2.8	2	2	820	10300
454	3.1	2	2	820	10300
437	3.2	3	2	820	10300
392	3.6	2	2	820	10300
384	3.6	3	2	820	10300
338	4.1	3	2	820	10300
333	4.2	2	2	820	10300
305	4.6	3	2	820	10300
297	4.7	2	2	820	10300
261	5.4	2	2	820	10300
257	5.4	3	2	820	10300
238	5.9	2	2	820	10300
231	6.1	3	2	820	10300
205	6.8	3	2	820	10300
200	7.0	2	2	820	10300
176	8.0	2	2	820	10300
175	8.0	3	2	820	10300

MDF77R37 1500Nm

i	n_a [1/min]	Stopień *Stage* F77	R37	M_{amax} [Nm]	F_{Ra} [N]
19180	0.07	3	3	1500	15700
17593	0.08	3	3	1500	15700
16128	0.09	3	3	1500	15700
14978	0.09	3	3	1500	15700
13731	0.10	3	3	1500	15700
12049	0.12	3	3	1500	15700
11035	0.13	3	3	1500	15700
9683	0.14	3	3	1500	15700
8464	0.17	3	3	1500	15700
7520	0.19	3	3	1500	15700
6580	0.21	3	3	1500	15700
5808	0.24	3	3	1500	15700
5026	0.28	3	3	1500	15700
4931	0.28	2	3	1110	17900
4523	0.31	2	3	1110	17900
4435	0.32	3	3	1500	15700
3851	0.36	2	3	1110	17900
3832	0.37	3	3	1500	15700
3381	0.41	3	3	1500	15700
3320	0.42	2	3	1110	17900
3095	0.45	2	3	1110	17900
2978	0.47	3	3	1500	15700
2705	0.52	2	3	1110	17900
2613	0.54	3	3	1500	15700
2536	0.55	2	3	1110	17900
2284	0.61	3	3	1500	15700
2238	0.63	2	3	1110	17900
2039	0.69	2	3	1110	17900
2029	0.69	3	2	1500	15700
1759	0.80	2	3	1110	17900
1728	0.81	3	2	1500	15700
1639	0.85	2	3	1110	17900
1544	0.91	3	2	1500	15700
1433	0.98	2	3	1110	17900
1354	1.0	3	2	1500	15700
1343	1.0	2	3	1110	17900
1200	1.2	3	2	1500	15700
1185	1.2	2	3	1110	17900
1053	1.3	3	2	1500	15700
1051	1.3	2	3	1100	17900
910	1.5	3	2	1500	15700
893	1.6	2	3	1110	17900
815	1.7	2	2	1110	17900
810	1.7	3	2	1500	15700
710	2.0	3	2	1500	15700
706	2.0	2	2	1110	17900
660	2.1	2	2	1110	17900
615	2.3	3	2	1500	15700
571	2.5	2	2	1110	17900
538	2.6	3	2	1500	15700
485	2.9	2	2	1110	17900
480	2.9	3	2	1500	15700
433	3.2	2	2	1110	17900
413	3.4	3	2	1500	15700
370	3.8	2	2	1110	17900
367	3.8	3	2	1500	15700
346	4.0	2	2	1110	17900
323	4.3	3	2	1500	15700
292	4.8	2	2	1110	17900
280	5.0	3	2	1500	15700
247	5.7	3	2	1500	15700
221	6.3	3	2	1500	15700
199	7.0	3	2	1500	15700

MDF87R57 3000Nm

i	n_a [1/min]	Stopień *Stage* F87	R57	M_{amax} [Nm]	F_{Ra} [N]
23042	0.06	3	3	3000	19800
20462	0.07	3	3	3000	19800
18238	0.08	3	3	3000	19800
15877	0.09	3	3	3000	19800
14099	0.10	3	3	3000	19800
12205	0.11	3	3	3000	19800
10433	0.13	3	3	3000	19800
9381	0.15	3	3	3000	19800
8142	0.17	3	3	3000	19800
7100	0.20	3	3	3000	19800
6273	0.22	3	3	3000	19800
5510	0.25	3	3	3000	19800
4954	0.28	3	3	3000	19800
4952	0.28	2	3	3000	19800
4562	0.31	2	3	3000	19800
4245	0.33	3	3	3000	19800
3919	0.36	2	3	3000	19800
3721	0.38	3	3	3000	19800
3503	0.40	2	3	3000	19800
3244	0.43	3	2	3000	19800
3196	0.44	2	3	3000	19800
2881	0.49	3	2	3000	19800
2857	0.49	2	3	3000	19800
2576	0.54	3	2	3000	19800
2524	0.55	2	3	3000	19800
2199	0.64	3	2	3000	19800
2134	0.66	2	3	3000	19800
1930	0.73	3	2	3000	19800
1913	0.73	2	3	3000	19800
1717	0.82	2	3	3000	19800
1709	0.82	3	2	3000	19800
1493	0.94	3	2	3000	19800
1476	0.95	2	3	3000	19800
1300	1.1	3	2	3000	19800
1278	1.1	2	3	3000	19800
1148	1.2	3	2	3000	19800
1142	1.2	2	3	3000	19800
1010	1.4	3	2	3000	19800
988	1.4	2	3	3000	19800
887	1.6	3	2	3000	19800
883	1.6	2	3	3000	19800
780	1.8	3	2	3000	19800
748	1.9	2	3	3000	19800
674	2.1	3	2	3000	19800
662	2.1	2	2	3000	19800
609	2.3	3	2	3000	19800
592	2.4	2	2	3000	19800
519	2.7	2	2	3000	19800
515	2.7	3	2	3000	19800
468	3.0	2	2	3000	19800
452	3.1	3	2	3000	19800
398	3.5	2	2	3000	19800
350	4.0	2	2	3000	19800
345	4.1	3	2	3000	19800
315	4.4	2	2	3000	19800
300	4.7	3	2	3000	19800
281	5.0	2	2	3000	19800
249	5.6	3	2	3000	19800
240	5.8	2	2	3000	19800
211	6.6	2	2	3000	19800
193	7.3	2	2	3000	19800

MDF97R57, MDF107R77, MDF127R77 n_e=1400 1/min

MDF97R57 4300Nm

i	n_a [1/min]	Stopień *Stage* F97	R57	M_{amax} [Nm]	F_{Ra} [N]
29211	0.05	3	3	4300	29900
26911	0.05	3	3	4300	29900
23814	0.06	3	3	4300	29900
20813	0.07	3	3	4300	29900
18119	0.08	3	3	4300	29900
15472	0.09	3	3	4300	29900
14022	0.10	3	3	4300	29900
12324	0.11	3	3	4300	29900
10838	0.13	3	3	4300	29900
9576	0.15	3	3	4300	29900
8318	0.17	3	3	4300	29900
7328	0.19	3	3	4300	29900
6469	0.22	3	3	4300	29900
6338	0.22	2	3	4300	29900
5680	0.25	2	3	4300	29900
5615	0.25	3	3	4300	29900
5016	0.28	2	3	4300	29900
4961	0.28	3	3	4300	29900
4367	0.32	2	3	4300	29900
4333	0.32	3	3	4300	29900
3914	0.36	2	3	4300	29900
3906	0.36	3	2	4300	29900
3357	0.42	2	3	4300	29900
3352	0.42	3	2	4300	29900
3009	0.47	2	3	4300	29900
2907	0.48	3	2	4300	29900
2553	0.55	3	2	4300	29900
2448	0.57	2	3	4300	29900
2245	0.62	3	2	4300	29900
2199	0.64	2	3	4300	29900
1971	0.71	2	3	4300	29900
1970	0.71	3	2	4300	29900
1741	0.80	2	3	4300	29900
1722	0.81	3	2	4300	29900
1527	0.92	3	2	4300	29900
1468	0.95	2	3	4300	29900
1327	1.1	3	2	4300	29900
1316	1.1	2	3	4300	29900
1189	1.2	2	3	4300	29900
1171	1.2	3	2	4300	29900
1023	1.4	2	3	4300	29900
1022	1.4	3	2	4300	29900
898	1.6	3	2	4300	29900
892	1.6	2	2	4300	29900
784	1.8	3	2	4300	29900
760	1.8	2	2	4300	29900
690	2.0	3	2	4300	29900
667	2.1	2	2	4300	29900
605	2.3	3	2	4300	29900
569	2.5	2	2	4300	29900
529	2.6	3	2	4300	29900
510	2.7	2	2	4300	29900
473	3.0	2	2	4300	29900
467	3.0	3	2	4300	29900
406	3.4	3	2	4300	29900
403	3.5	2	2	4300	29900
363	3.9	3	2	4300	29900
361	3.9	2	2	4300	29900
317	4.4	2	2	4300	29900
285	4.9	3	2	4300	29900
275	5.1	2	2	4300	29900
245	5.7	3	2	4300	29900
242	5.8	2	2	4300	29900
208	6.7	3	2	4300	29900
195	7.2	3	2	4300	29900

MDF107R77 7840Nm

i	n_a [1/min]	Stopień *Stage* F107	R77	M_{amax} [Nm]	F_{Ra} [N]
25375	0.06	3	3	7680	49800
21652	0.06	3	3	7680	49800
18933	0.07	3	3	7680	49800
16888	0.08	3	3	7680	49800
14767	0.09	3	3	7680	49800
11348	0.12	3	3	7680	49800
10039	0.14	3	3	7680	49800
8548	0.16	3	3	7680	49800
7674	0.18	3	3	7680	49800
6767	0.21	3	3	7680	49800
5954	0.24	3	3	7680	49800
5383	0.26	2	3	7840	49400
5223	0.27	3	3	7680	49800
4593	0.30	2	3	7840	49400
4567	0.31	3	3	7680	49800
4016	0.35	2	3	7840	49400
3948	0.35	3	3	7680	49800
3815	0.37	2	3	7840	49400
3521	0.40	3	3	7680	49800
3347	0.42	2	3	7840	49400
3037	0.46	3	2	7680	49800
2839	0.49	2	3	7840	49400
2756	0.51	3	2	7680	49800
2563	0.55	2	3	7840	49400
2369	0.59	3	2	7680	49800
2255	0.62	2	3	7840	49400
2129	0.66	2	3	7840	49400
2068	0.68	3	2	7840	49400
1826	0.77	3	2	7680	49800
1813	0.77	2	3	7840	49400
1597	0.88	3	2	7680	49800
1590	0.88	2	3	7840	49400
1436	0.97	2	3	7840	49400
1401	1.0	3	2	7680	49800
1263	1.1	2	3	7840	49400
1243	1.1	3	2	7680	49800
1193	1.2	2	3	7840	49400
1087	1.3	3	2	7680	49800
1015	1.4	2	3	7840	49400
950	1.5	3	2	7680	49800
923	1.5	2	3	7840	49400
834	1.7	3	2	7680	49800
800	1.8	2	3	7840	49400
736	1.9	3	2	7680	49800
696	2.0	2	3	7840	49400
644	2.2	2	2	7840	49400
640	2.2	3	2	7680	49800
591	2.4	2	2	7840	49400
560	2.5	3	2	7680	49800
518	2.7	2	2	7840	49400
491	2.9	2	2	7840	49400
489	2.9	3	2	7680	49800
436	3.2	3	2	7680	49800
430	3.3	2	2	7840	49400
387	3.6	2	2	7840	49400
370	3.8	3	2	7680	49800
340	4.1	2	2	7840	49400
333	4.2	3	2	7680	49800
300	4.7	2	2	7840	49400
291	4.8	3	2	7680	49800
266	5.3	2	2	7840	49400
255	5.5	3	2	7680	49800
225	6.2	3	2	7680	49800
190	7.4	3	2	7680	49800

MDF127R77 12000Nm

i	n_a [1/min]	Stopień *Stage* F127	R77	M_{amax} [Nm]	F_{Ra} [N]
24478	0.06	3	3	12000	90000
22323	0.06	3	3	12000	90000
19048	0.07	3	3	12000	90000
16656	0.08	3	3	12000	90000
14722	0.10	3	3	12000	90000
12912	0.11	3	3	12000	90000
11656	0.12	3	3	12000	90000
10191	0.14	3	3	12000	90000
8831	0.16	3	3	12000	90000
7643	0.18	3	3	12000	90000
6715	0.21	3	3	12000	90000
5925	0.24	3	3	12000	90000
5153	0.27	3	3	12000	90000
4533	0.31	3	3	12000	90000
3926	0.36	3	3	12000	90000
3454	0.41	3	3	12000	90000
3031	0.46	3	3	12000	90000
2672	0.52	3	2	12000	90000
2357	0.59	3	2	12000	90000
2038	0.69	3	2	12000	90000
1784	0.78	3	2	12000	90000
1606	0.87	3	2	12000	90000
1390	1.0	3	2	12000	90000
1220	1.1	3	2	12000	90000
1077	1.3	3	2	12000	90000
930	1.5	3	2	12000	90000
820	1.7	3	2	12000	90000
727	1.9	3	2	12000	90000
648	2.2	3	2	12000	90000
549	2.6	3	2	12000	90000
495	2.8	3	2	12000	90000
428	3.3	3	2	12000	90000
376	3.7	3	2	12000	90000

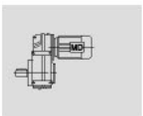

MDF127R87, MDF157R97, MDF167R97 n_e=1400 1/min

MDF127R87 12000Nm

i	n_a [1/min]	Stopień *Stage* F127	R87	M_{amax} [Nm]	F_{Ra} [N]
483	2.9	3	2	12000	90000
418	3.3	3	2	12000	90000
374	3.7	3	2	12000	90000
312	4.5	3	2	12000	90000
293	4.8	3	2	12000	90000
259	5.4	3	2	12000	90000
223	6.3	3	2	12000	90000
198	7.1	3	2	12000	90000
166	8.4	3	2	12000	90000

MDF157R97 18000Nm

i	n_a [1/min]	Stopień *Stage* F157	R97	M_{amax} [Nm]	F_{Ra} [N]
31434	0.04	3	3	18000	100300
26173	0.05	3	3	18000	100300
23464	0.06	3	3	18000	100300
20212	0.07	3	3	18000	100300
17984	0.08	3	3	18000	100300
16358	0.09	3	3	18000	100300
13751	0.10	3	3	18000	100300
12235	0.11	3	3	18000	100300
10033	0.14	3	3	18000	100300
9021	0.16	3	3	18000	100300
8026	0.17	3	3	18000	100300
7075	0.20	3	3	18000	100300
6295	0.22	3	3	18000	100300
5404	0.26	3	3	18000	100300
4831	0.29	3	3	18000	100300
4130	0.34	3	3	18000	100300
3607	0.39	3	3	18000	100300
3210	0.44	3	3	18000	100300
2780	0.50	3	3	18000	100300
2427	0.58	3	2	18000	100300
2185	0.64	3	2	18000	100300
1944	0.72	3	2	18000	100300
1674	0.84	3	2	18000	100300
1441	0.97	3	3	18000	100300
1308	1.1	3	2	18000	100300
1169	1.2	3	2	18000	100300
953	1.5	3	2	18000	100300
845	1.7	3	2	18000	100300
764	1.8	3	2	18000	100300
680	2.1	3	2	18000	100300
576	2.4	3	2	18000	100300
503	2.8	3	2	18000	100300
446	3.1	3	2	18000	100300
353	4.0	3	2	18000	100300
302	4.6	3	2	18000	100300
273	5.1	3	2	18000	100300
232	6.0	3	2	18000	100300
202	6.9	3	2	18000	100300
197	7.1	3	2	18000	100300

MDF167R97 32000 Nm

i	n_a [1/min]	Stopień *Stage* F167	R97	M_{amax} [Nm]	F_{Ra} [N]
21910	0.06	3	3	32000	150000
19337	0.07	3	3	32000	150000
16663	0.08	3	3	32000	150000
14706	0.10	3	3	32000	150000
12857	0.11	3	3	32000	150000
11402	0.12	3	3	32000	150000
9585	0.15	3	3	32000	150000
7289	0.19	3	3	32000	150000
5949	0.24	3	3	32000	150000
5319	0.26	3	3	32000	150000
4531	0.31	3	3	32000	150000
3750	0.37	3	3	32000	150000
3060	0.46	3	3	32000	150000
2514	0.56	3	3	32000	150000
2056	0.68	3	2	32000	150000
1893	0.74	3	2	32000	150000
1564	0.90	3	2	32000	150000
1439	0.97	3	2	32000	150000
1223	1.14	3	2	32000	150000
1049	1.33	3	2	32000	150000
937	1.49	3	2	32000	150000
841	1.67	3	2	32000	150000
703	1.99	3	2	32000	150000
623	2.25	3	2	32000	150000
534	2.62	3	2	32000	150000
470	2.98	3	2	32000	150000
409	3.42	3	2	32000	150000

MDF167R107, MDF177R97, MDF177R107 n_e=1400 1/min

MDF167R107 — 32000 Nm

i	n_a [1/min]	Stopień *Stage* F167	R107	M_{amax} [Nm]	F_{Ra} [N]
368	3.81	2	2	32000	150000
350	4.00	2	2	32000	150000
314	4.46	2	2	32000	150000
283	4.95	2	2	32000	150000
257	5.44	2	2	32000	150000
228	6.14	2	2	32000	150000
207	6.76	2	2	32000	150000
178	7.87	2	2	32000	150000

MDF177R97 — 50000 Nm

i	n_a [1/min]	Stopień *Stage* F177	R97	M_{amax} [Nm]	F_{Ra} [N]
39228	0.04	3	3	50000	190000
32663	0.04	3	3	50000	190000
29282	0.05	3	3	50000	190000
23019	0.06	3	3	50000	190000
20414	0.07	3	3	50000	190000
17161	0.08	3	3	50000	190000
15770	0.09	3	3	50000	190000
14005	0.10	3	3	50000	190000
12521	0.12	3	3	50000	190000
11258	0.13	3	3	50000	190000
9771	0.15	3	3	50000	190000
8829	0.16	3	3	50000	190000
8113	0.18	3	3	50000	190000
7204	0.20	3	3	50000	190000
6991	0.21	2	3	50000	190000
6442	0.23	3	3	50000	190000
5792	0.25	3	3	50000	190000
5219	0.28	2	3	50000	190000
4339	0.33	3	2	50000	190000
4103	0.35	2	3	50000	190000
3681	0.39	3	2	50000	190000
3638	0.40	2	3	50000	190000
3389	0.43	3	2	50000	190000
3058	0.47	2	3	50000	190000
2811	0.52	2	3	50000	190000
2496	0.58	2	3	50000	190000
2232	0.65	2	3	50000	190000
2006	0.72	2	3	50000	190000
1930	0.75	3	2	50000	190000
1741	0.83	2	3	50000	190000
1711	0.85	3	2	50000	190000
1574	0.92	2	3	50000	190000
1446	1.0	2	3	50000	190000
1258	1.2	3	2	50000	190000
1032	1.4	2	3	50000	190000
888	1.6	3	2	50000	190000
773	1.9	2	3	50000	190000
656	2.2	2	2	50000	190000
604	2.4	2	2	50000	190000
540	2.7	2	2	50000	190000
486	3.0	2	2	50000	190000
440	3.3	2	2	50000	190000
390	3.7	2	2	50000	190000
344	4.2	2	2	50000	190000
305	4.8	2	2	50000	190000
224	6.5	2	2	50000	190000
202	7.2	2	2	50000	190000
158	9.2	2	2	50000	190000
133	11	2	2	50000	190000
113	13	2	2	50000	190000

MDF177R107 — 50000 Nm

i	n_a [1/min]	Stopień *Stage* F177	R107	M_{amax} [Nm]	F_{Ra} [N]
1004	1.4	3	2	50000	190000
876	1.7	3	2	50000	190000
740	2.0	3	2	50000	190000
522	2.8	3	2	50000	190000
455	3.2	3	2	50000	190000
427	3.4	3	2	50000	190000
295	4.9	2	2	50000	190000
262	5.5	3	2	50000	190000
222	6.5	3	2	50000	190000
194	7.5	3	2	50000	190000
179	8.1	2	2	50000	190000
164	8.8	3	2	50000	190000
156	9.3	2	2	50000	190000
148	9.8	2	2	50000	190000
133	10.9	2	3	50000	190000
126	11.5	2	2	50000	190000
110	13.2	2	2	50000	190000
93	15.6	2	2	50000	190000
76	19.0	2	2	50000	190000

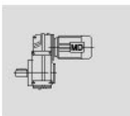

6.4. Tabele doboru motoreduktorów
6.4. Selection tables for gearmotors

Wyjaśnienie oznaczeń:
Description:

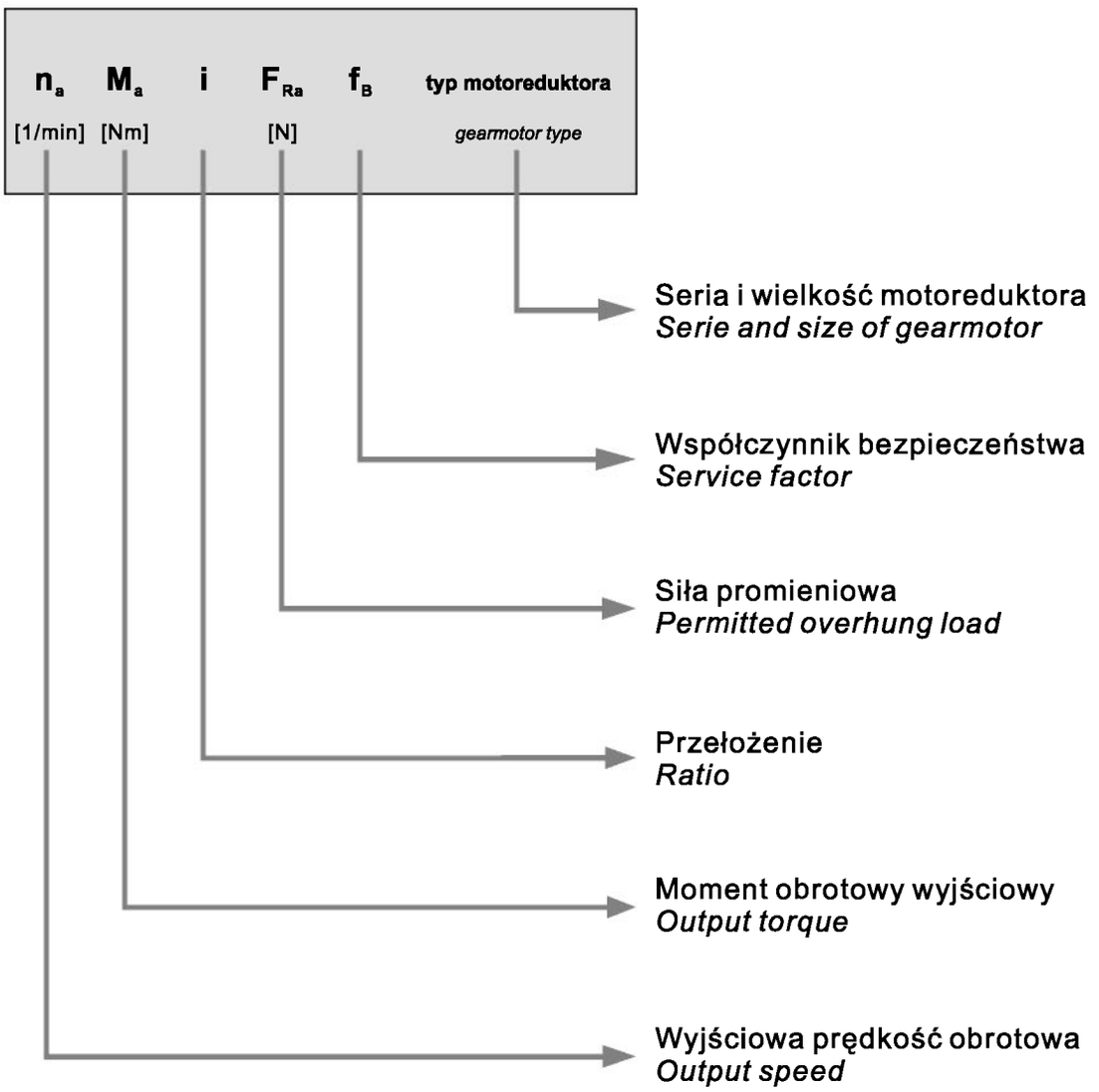

Tabele doboru motoreduktorów zawierają oznaczenia silników standardowych zintegrowanych. Każdy motoreduktor może być wyposażony w dowolny, inny silnik, również znormalizowany IEC.
Selection tables for gearmotors include descriptions of standard, integrated electric motors. Each gearmotor can be supplied with any other electric motor, including IEC standard.

n_a [1/min]	M_a [Nm]	i	F_{Ra} [N]	f_B	typ motoreduktora *gearmotor type*
0.12kW					
0.06	15000	22323	84600	0.80	MDFA127R77DS63S4 MDFAF127R77DS63S4 MDF127R77DS63S4 MDFF127R77DS63S4
0.07	12600	19048	89300	0.95	
0.08	10800	16656	90000	1.10	
0.09	9870	14722	90000	1.20	
0.11	7980	12912	90000	1.50	
0.12	7090	11656	90000	1.70	
0.14	6300	10191	90000	1.90	
0.09	9590	14767	44400	0.80	MDFA107R77DS63S4 MDFAF107R77DS63S4 MDF107R77DS63S4 MDFF107R77DS63S4
0.12	7610	11348	50000	1.00	
0.14	5890	10039	54300	1.30	
0.16	4880	8548	56600	1.55	
0.18	4740	7674	56900	1.60	
0.20	4120	6767	58200	1.85	
0.23	3530	5954	59400	2.2	
0.26	3070	5223	60300	2.5	
0.30	2890	4567	60600	2.7	
0.39	2140	3521	61900	3.6	
0.19	4800	7328	23100	0.90	MDFA97R57DS63S4 MDFAF97R57DS63S4 MDF97R57DS63S4 MDFF97R57DS63S4
0.21	4040	6469	30700	1.05	
0.25	3680	5615	31600	1.15	
0.28	3200	4961	32800	1.35	
0.32	2800	4333	33800	1.55	
0.35	2550	3906	34300	1.70	MDFA97R57DS63S4 MDFAF97R57DS63S4 MDF97R57DS63S4 MDFF97R57DS63S4
0.41	2210	3352	35000	1.95	
0.47	1820	2907	35700	2.4	
0.54	1670	2553	36000	2.6	
0.28	3250	4954	3640	0.90	MDFA87R57DS63S4 MDFAF87R57DS63S4 MDF87R57DS63S4 MDFF87R57DS63S4
0.33	2690	4245	24100	1.10	
0.37	2200	3721	25800	1.35	
0.43	2140	3244	26000	1.40	MDFA87R57DS63S4 MDFAF87R57DS63S4 MDF87R57DS63S4 MDFF87R57DS63S4
0.48	1900	2881	26700	1.60	
0.54	1700	2576	27300	1.75	
0.63	1440	2199	28000	2.1	
0.72	1240	1930	28400	2.4	
0.81	1120	1709	28700	2.7	
0.92	980	1493	29000	3.0	
1.1	785	1300	29400	3.8	
1.2	710	1148	29500	4.2	
0.53	1750	2613	13800	0.85	MDFA77R57DS63S4 MDFAF77R57DS63S4 MDF77R57DS63S4 MDFF77R57DS63S4
0.60	1520	2284	15600	1.00	
0.68	1340	2029	16700	1.10	
0.80	1130	1728	17800	1.35	MDFA77R57DS63S4 MDFAF77R57DS63S4 MDF77R57DS63S4 MDFF77R57DS63S4
0.89	1040	1544	18200	1.45	
1.0	910	1354	18600	1.65	

n_a [1/min]	M_a [Nm]	i	F_{Ra} [N]	f_B	typ motoreduktora *gearmotor type*
0.12kW					
1.1	810	1200	19000	1.85	MDFA77R57DS63S4 MDFAF77R57DS63S4 MDF77R57DS63S4 MDFF77R57DS63S4
1.3	710	1053	19200	2.1	
1.5	605	910	19500	2.5	
1.7	510	810	19700	2.9	
1.9	445	710	19800	3.4	
0.97	920	1429	9270	0.90	MDFA67R37DS63S4 MDFAF67R37DS63S4 MDF67R37DS63S4 MDFF67R37DS63S4
1.1	830	1271	10200	1.00	
1.2	700	1102	11300	1.15	
1.4	615	970	11800	1.35	
1.6	540	858	12200	1.50	
1.8	475	755	12500	1.75	
2.2	405	641	12800	2.0	
2.4	375	572	12900	2.2	
2.7	320	509	13000	2.6	
3.2	275	437	13000	3.0	
1.4	655	967	5860	0.90	MDFA57R37DS63S4 MDFAF57R37DS63S4 MDF57R37DS63S4 MDFF57R37DS63S4
1.6	585	851	9320	1.05	
1.9	500	738	9920	1.20	
2.1	435	646	10400	1.40	
2.5	370	558	10700	1.60	
2.7	330	506	11000	1.80	
3.0	285	452	11200	2.1	
3.2	295	426	11200	2.0	MDFA57R37DS63S4 MDFAF57R37DS63S4 MDF57R37DS63S4 MDFF57R37DS63S4
3.6	260	382	11300	2.3	
4.2	225	330	11500	2.7	
4.6	200	298	11500	3.0	
5.3	177	262	11500	3.4	
2.2	425	622	3390	0.95	MDFA47R17DS63S4 MDFAF47R17DS63S4 MDF47R17DS63S4 MDFF47R17DS63S4
2.5	370	543	6320	1.10	
2.9	320	475	6890	1.25	
3.3	280	419	7250	1.45	
2.6	365	524	6390	1.10	MDFA47R17DS63S4 MDFAF47R17DS63S4 MDF47R17DS63S4 MDFF47R17DS63S4
2.8	340	489	6690	1.20	
3.2	290	427	7130	1.35	
3.6	260	381	7400	1.55	
4.1	225	334	7610	1.75	
4.7	198	295	7780	2.0	
5.4	166	253	7940	2.4	
4.3	210	322	4130	0.95	MDFA37R17DS63S4 MDFAF37R17DS63S4 MDF37R17DS63S4 MDFF37R17DS63S4
5.0	184	278	4510	1.10	
5.7	157	242	4810	1.30	
6.2	149	221	4890	1.35	
4.2	225	326	3890	0.90	MDFA37R17DS63S4 MDFAF37R17DS63S4 MDF37R17DS63S4 MDFF37R17DS63S4
4.8	195	285	4370	1.05	
5.5	170	250	4670	1.20	
6.3	150	219	4880	1.35	
7.4	127	186	5080	1.60	
8.3	114	167	5170	1.75	

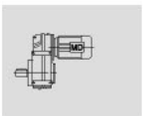

n_a [1/min]	M_a [Nm]	i	F_{Ra} [N]	f_B	typ motoreduktora *gearmotor type*
0.12kW					
3.9	290	228.99	13000	2.8	MDFA67DS63M6 MDFAF67DS63M6 MDF67DS63M6 MDFF67DS63M6
4.6	250	195.39	13000	3.3	
5.3	220	170.85	13000	3.8	
5.6	205	162.31	13000	4.0	
6.3	181	142.40	13000	4.5	
4.5	255	199.70	11400	2.4	MDFA57DS63M6 MDFAF57DS63M6 MDF57DS63M6 MDFF57DS63M6
4.9	235	183.60	11500	2.6	
5.7	200	157.09	11500	3.0	
6.6	173	136.16	11500	3.5	
7.1	162	127.27	11500	3.7	
6.9	166	199.70	11500	3.6	MDFA57DS63S4 MDFAF57DS63S4 MDF57DS63S4 MDFF57DS63S4
7.5	153	183.60	11500	3.9	
8.8	130	157.09	11500	4.6	
10	113	136.16	11500	5.3	
4.7	245	190.76	7510	1.65	MDFA47DS63M6 MDFAF47DS63M6 MDF47DS63M6 MDFF47DS63M6
5.1	225	175.38	7640	1.80	
6.0	191	150.06	7820	2.1	
6.9	166	130.07	7940	2.4	
7.4	155	121.57	7990	2.6	
8.6	134	105.09	8070	3.0	
10	114	89.29	8130	3.5	
11	102	79.72	8160	3.9	
7.2	158	190.76	7970	2.5	MDFA47DS63S4 MDFAF47DS63S4 MDF47DS63S4 MDFF47DS63S4
7.9	146	175.38	8020	2.8	
9.2	125	150.06	8100	3.2	
11	108	130.07	8150	3.7	
7.0	164	128.51	4740	1.20	MDFA37DS63M6 MDFAF37DS63M6 MDF37DS63M6 MDFF37DS63M6
7.6	150	117.88	4880	1.35	
9.0	128	100.36	5070	1.55	
10	110	86.53	5190	1.80	
11	103	80.65	5240	1.95	
11	107	128.51	5220	1.85	MDFA37DS63S4 MDFAF37DS63S4 MDF37DS63S4 MDFF37DS63S4
12	98	117.88	5270	2.0	
14	83	100.36	5340	2.4	
16	72	86.53	5400	2.8	
17	67	80.65	5410	3.0	
20	59	70.50	5440	3.4	
21	55	66.09	5460	3.6	
24	48	58.32	5470	4.1	
25	45	54.54	5480	4.4	
27	43	51.70	5490	4.7	
29	39	47.02	5500	5.1	
31	36	43.83	5500	5.5	
36	32	38.31	5510	6.3	
38	30	35.91	5520	6.7	
44	26	31.69	5520	7.6	
49	23	28.09	5520	8.6	
58	20	23.88	5270	10	

n_a [1/min]	M_a [Nm]	i	F_{Ra} [N]	f_B	typ motoreduktora *gearmotor type*
0.12kW					
58	20	23.63	5250	10	MDFA37DS63S4 MDFAF37DS63S4 MDF37DS63S4 MDFF37DS63S4
67	17	20.57	5030	12	
72	16	19.27	4930	13	
81	14	17.03	4740	14	
87	13	15.81	4630	15	
96	12	14.33	4490	17	
107	11	12.87	4330	19	
125	9.2	11.08	4130	21	
132	8.7	10.42	4050	21	
154	7.4	8.97	3860	24	
186	6.2	7.44	3630	23	
205	5.6	6.74	3510	25	
228	5.0	6.05	3390	27	
265	4.3	5.21	3230	29	
282	4.1	4.90	3170	29	
327	3.5	4.22	3020	31	
0.18kW					
0.10	13500	12912	87500	0.90	MDFA127R77DS63M4 MDFAF127R77DS63M4 MDF127R77DS63M4 MDFF127R77DS63M4
0.11	12100	11656	90000	1.00	
0.13	10700	10191	90000	1.10	
0.15	8980	8831	90000	1.35	
0.17	7770	7643	90000	1.55	
0.20	7150	6715	90000	1.70	
0.15	8560	8548	47400	0.90	MDFA107R77DS63M4 MDFAF107R77DS63M4 MDF107R77DS63M4 MDFF107R77DS63M4
0.17	8050	7674	48800	0.95	
0.20	7030	6767	51500	1.10	
0.22	6090	5954	53800	1.25	
0.25	5310	5223	55600	1.45	
0.29	4860	4567	56600	1.60	
0.37	3660	3521	59100	2.1	
0.43	3170	3037	60100	2.4	MDFA107R77DS63M4 MDFAF107R77DS63M4 MDF107R77DS63M4 MDFF107R77DS63M4
0.48	2880	2756	60600	2.7	
0.56	2470	2369	61400	3.1	
0.64	2160	2068	61900	3.6	
0.30	4660	4333	27900	0.90	MDFA97R57DS63M4 MDFAF97R57DS63M4 MDF97R57DS63M4 MDFF97R57DS63M4
0.34	4260	3906	30000	1.00	MDFA97R57DS63M4 MDFAF97R57DS63M4 MDF97R57DS63M4 MDFF97R57DS63M4
0.39	3670	3352	31600	1.15	
0.45	3100	2907	33100	1.40	
0.52	2790	2553	33800	1.55	
0.59	2450	2245	34500	1.75	
0.67	2130	1970	35200	2.0	
0.77	1890	1722	35600	2.3	
0.86	1670	1527	36000	2.6	
0.99	1380	1327	36500	3.1	
1.1	1280	1171	36600	3.3	

n_a [1/min]	M_a [Nm]	i	F_{Ra} [N]	f_B	typ motoreduktora *gearmotor type*
0.18kW					
0.46	3160	2881	12300	0.95	MDFA87R57DS63M4 MDFAF87R57DS63M4 MDF87R57DS63M4 MDFF87R57DS63M4
0.51	2820	2576	23600	1.05	
0.60	2400	2199	25200	1.25	
0.68	2080	1930	26200	1.45	
0.77	1860	1709	26800	1.60	
0.88	1640	1493	27500	1.85	
1.0	1350	1300	28200	2.2	
1.1	1210	1148	28500	2.5	
1.3	1050	1010	28900	2.9	
1.5	940	887	29100	3.2	
1.7	810	780	29400	3.7	
0.76	1880	1728	7810	0.80	MDFA77R37DS63M4 MDFAF77R37DS63M4 MDF77R37DS63M4 MDFF77R37DS63M4
0.86	1710	1544	14100	0.90	
0.98	1500	1354	15700	1.00	
1.1	1330	1200	16800	1.15	
1.2	1170	1053	17600	1.30	
1.5	1000	910	18300	1.50	
1.6	860	810	18800	1.75	
1.9	755	710	19100	2.0	
2.2	670	615	19300	2.2	
1.5	910	858	9370	0.90	MDFA67R37DS63M4 MDFAF67R37DS63M4 MDF67R37DS63M4 MDFF67R37DS63M4
1.8	800	755	10400	1.00	
2.1	685	641	11400	1.20	
2.3	625	572	11800	1.30	
2.6	540	509	12200	1.50	
3.0	470	437	12600	1.75	
3.4	420	384	12700	1.95	
2.6	560	500	12100	1.45	MDFA67R37DS63M4 MDFAF67R37DS63M4 MDF67R37DS63M4 MDFF67R37DS63M4
2.9	510	454	12400	1.60	
3.4	440	392	12700	1.85	
4.0	370	333	12900	2.2	
4.4	325	297	13000	2.5	
5.1	285	261	13000	2.9	
5.6	260	238	13000	3.2	
6.6	215	200	13000	3.8	
2.4	615	558	9080	1.00	MDFA57R37DS63M4 MDFAF57R37DS63M4 MDF57R37DS63M4 MDFF57R37DS63M4
2.6	550	506	9560	1.10	
2.9	485	452	10000	1.25	
3.4	415	386	10500	1.45	
3.9	360	338	10800	1.65	
3.1	485	426	10000	1.25	MDFA57R37DS63M4 MDFAF57R37DS63M4 MDF57R37DS63M4 MDFF57R37DS63M4
3.5	430	382	10400	1.40	
4.0	370	330	10700	1.60	
4.4	335	298	11000	1.80	
5.0	295	262	11200	2.0	
5.8	250	226	11400	2.4	
6.6	215	200	11500	2.8	
3.6	400	370	5920	1.00	MDFA47R17DS63M4 MDFAF47R17DS63M4 MDF47R17DS63M4 MDFF47R17DS63M4
4.1	365	324	6410	1.10	
4.6	315	288	6910	1.25	
5.3	270	249	7310	1.50	

n_a [1/min]	M_a [Nm]	i	F_{Ra} [N]	f_B	typ motoreduktora *gearmotor type*
0.18kW					
4.0	375	334	6260	1.05	MDFA47R17DS63M4 MDFAF47R17DS63M4 MDF47R17DS63M4 MDFF47R17DS63M4
4.5	330	295	6780	1.20	
5.2	280	253	7250	1.45	
6.1	245	217	7490	1.60	
7.0	215	190	7690	1.85	
7.4	200	178	7770	2.0	
7.1	210	186	4160	0.95	MDFA37R17DS63M4 MDFAF37R17DS63M4 MDF37R17DS63M4 MDFF37R17DS63M4
7.9	188	167	4460	1.05	
9.1	166	145	4720	1.20	
10	146	129	4910	1.35	
3.1	555	281.71	19600	2.7	MDFA77DS63L6 MDFAF77DS63L6 MDF77DS63L6 MDFF77DS63L6
3.3	520	262.93	19700	2.9	
3.8	445	225.79	19800	3.4	
3.8	450	228.99	12600	1.80	MDFA67DS63L6 MDFAF67DS63L6 MDF67DS63L6 MDFF67DS63L6
4.4	385	195.39	12900	2.1	
5.1	340	170.85	13000	2.4	
5.8	300	228.99	13000	2.8	MDFA67DS63M4 MDFAF67DS63M4 MDF67DS63M4 MDFF67DS63M4
6.8	255	195.39	13000	3.2	
7.7	225	170.85	13000	3.7	
4.4	395	199.70	10600	1.50	MDFA57DS63L6 MDFAF57DS63L6 MDF57DS63L6 MDFF57DS63L6
4.7	365	183.60	10800	1.65	
5.5	310	157.09	11100	1.95	
6.4	270	136.16	11300	2.2	
6.8	250	127.27	11400	2.4	
7.9	215	110.01	11400	2.8	
6.6	260	199.70	11300	2.3	MDFA57DS63M4 MDFAF57DS63M4 MDF57DS63M4 MDFF57DS63M4
7.2	240	183.60	11500	2.5	
8.4	205	157.09	11500	2.9	
9.7	177	136.16	11500	3.4	
10	166	127.27	11500	3.6	
4.6	375	190.76	6240	1.05	MDFA47DS63L6 MDFAF47DS63L6 MDF47DS63L6 MDFF47DS63L6
5.0	345	175.38	6600	1.15	
5.8	295	150.06	7090	1.35	
6.7	255	130.07	7410	1.55	
7.2	240	121.57	7530	1.65	
6.9	250	190.76	7470	1.60	MDFA47DS63M4 MDFAF47DS63M4 MDF47DS63M4 MDFF47DS63M4
7.5	230	175.38	7610	1.75	
8.8	195	150.06	7800	2.0	
10	169	130.07	7920	2.4	
11	158	121.57	7970	2.5	
7.4	235	117.88	3750	0.85	MDFA37DS63L6 MDFAF37DS63L6 MDF37DS63L6 MDFF37DS63L6
8.7	198	100.36	4320	1.00	
10	171	86.53	4660	1.15	
11	159	80.65	4790	1.25	
12	139	70.50	4970	1.45	

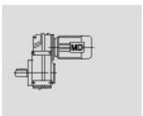

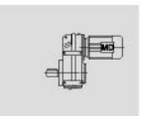

n_a [1/min]	M_a [Nm]	i	F_{Ra} [N]	f_B	typ motoreduktora *gearmotor type*
0.18kW					
10	167	128.51	4700	1.20	
11	154	117.88	4850	1.30	
13	131	100.36	5050	1.55	
15	113	86.53	5180	1.75	
16	105	80.65	5230	1.90	
19	92	70.50	5300	2.2	
20	86	66.09	5330	2.3	MDFA37DS63M4
23	76	58.32	5380	2.6	MDFAF37DS63M4
24	71	54.54	5400	2.8	MDF37DS63M4
26	67	51.70	5410	3.0	MDFF37DS63M4
28	61	47.02	5440	3.3	
30	57	43.83	5450	3.5	
34	50	38.31	5470	4.0	
37	47	35.91	5480	4.3	
42	41	31.69	5490	4.8	
47	37	28.09	5500	5.5	
55	31	23.88	5260	6.4	
56	31	23.63	5240	6.5	
64	27	20.57	5030	7.5	
69	25	19.27	4930	8.0	
78	22	17.03	4740	9.0	
83	21	15.81	4640	9.7	
92	19	14.33	4500	11	
103	17	12.87	4350	12	MDFA37DS63M4
119	14	11.08	4150	13	MDFAF37DS63M4
127	14	10.42	4070	14	MDF37DS63M4
147	12	8.97	3880	15	MDFF37DS63M4
178	9.7	7.44	3650	15	
196	8.8	6.74	3540	16	
218	7.9	6.05	3420	17	
253	6.8	5.21	3260	18	
269	6.4	4.90	3190	19	
313	5.5	4.22	3040	20	
0.25kW					
0.15	13300	8831	88000	0.90	
0.17	11500	7643	90000	1.05	MDFA127R77DS63L4
0.19	10400	6715	90000	1.15	MDFAF127R77DS63L4
0.22	9190	5925	90000	1.30	MDF127R77DS63L4
0.25	7860	5153	90000	1.55	MDFF127R77DS63L4
0.29	6850	4533	90000	1.75	
0.22	9000	5954	46200	0.85	MDFA107R77DS63L4
0.25	7860	5223	49300	1.00	MDFAF107R77DS63L4
0.28	7090	4567	51400	1.10	MDF107R77DS63L4
0.37	5370	3521	55500	1.45	MDFF107R77DS63L4
0.43	4680	3037	57000	1.65	
0.47	4240	3756	57900	1.80	MDFA107R77DS63L4
0.55	3650	2369	59100	2.1	MDFAF107R77DS63L4
0.63	3180	2068	60000	2.4	MDF107R77DS63L4
0.81	2440	1597	61400	3.2	MDFF107R77DS63L4
0.93	2110	1401	62000	3.6	
0.45	4530	2907	29200	0.95	MDFA97R57DS63L4 MDFAF97R57DS63L4
0.51	4050	2553	30600	1.05	MDF97R57DS63L4 MDFF97R57DS63L4

n_a [1/min]	M_a [Nm]	i	F_{Ra} [N]	f_B	typ motoreduktora *gearmotor type*
0.25kW					
0.58	3560	2245	31900	1.20	
0.66	3100	1970	33100	1.40	MDFA97R57DS63L4
0.75	2740	1722	33900	1.55	MDFAF97R57DS63L4
0.85	2430	1527	34600	1.75	MDF97R57DS63L4
0.98	2040	1327	35300	2.1	MDFF97R57DS63L4
1.1	1860	1171	35600	2.3	
1.3	1630	1022	36100	2.6	
0.67	3040	1930	18200	1.00	
0.76	2710	1709	24000	1.10	
0.87	2380	1493	25200	1.25	
1.0	1990	1300	26500	1.50	MDFA87R57DS63L4
1.1	1780	1148	27100	1.70	MDFAF87R57DS63L4
1.3	1550	1010	27700	1.95	MDF87R57DS63L4
1.5	1370	887	28100	2.2	MDFF87R57DS63L4
1.7	1200	780	28500	2.5	
1.9	1020	674	28900	2.9	
1.2	1690	1053	14300	0.90	
1.4	1450	910	16000	1.05	
1.6	1260	810	17100	1.20	MDFA77R37DS63L4
1.8	1110	710	17900	1.35	MDFAF77R37DS63L4
2.1	970	615	18400	1.55	MDF77R37DS63L4
2.4	850	538	18800	1.75	MDFF77R37DS63L4
2.7	760	480	19100	2.0	
3.2	645	413	19400	2.3	
2.0	1000	641	2370	0.80	MDFA67R37DS63L4
2.3	910	572	9440	0.90	MDFAF67R37DS63L4
2.6	795	509	10500	1.05	MDF67R37DS63L4
3.0	685	437	11400	1.20	MDFF67R37DS63L4
2.6	810	500	10400	1.00	
2.9	740	454	11000	1.10	
3.3	635	392	11700	1.30	MDFA67R37DS63L4
3.9	535	333	12200	1.55	MDFAF67R37DS63L4
4.4	475	297	12500	1.70	MDF67R37DS63L4
5.0	420	261	12700	1.95	MDFF67R37DS63L4
5.5	375	238	12900	2.2	
3.4	605	386	9170	1.00	MDFA57R37DS63L4
3.8	525	338	9740	1.15	MDFAF57R37DS63L4
5.1	400	255	10600	1.50	MDF57R37DS63L4
					MDFF57R37DS63L4
3.4	625	382	8710	0.95	
3.9	535	330	9680	1.10	
4.4	485	298	10000	1.25	MDFA57R37DS63L4
5.0	425	262	10400	1.40	MDFAF57R37DS63L4
5.8	360	226	10800	1.65	MDF57R37DS63L4
6.5	320	200	11000	1.90	MDFF57R37DS63L4
7.7	270	170	11300	2.2	
5.2	395	249	6020	1.00	MDFA47R17DS63L4
6.0	350	218	6580	1.15	MDFAF47R17DS63L4
6.7	305	193	7000	1.30	MDF47R17DS63L4
7.4	280	175	7250	1.45	MDFF47R17DS63L4

n_a [1/min]	M_a [Nm]	i	F_{Ra} [N]	f_B	typ motoreduktora *gearmotor type*
0.25kW					
5.1	405	253	5850	1.00	
6.0	355	217	6490	1.10	MDFA47R17DS63L4
6.8	310	190	6970	1.30	MDFAF47R17DS63L4
7.3	290	178	7150	1.40	MDF47R17DS63L4
8.7	240	149	7520	1.65	MDFF47R17DS63L4
9.9	210	131	7710	1.90	
8.9	240	145	3640	0.85	
10	210	129	4130	0.95	MDFA37R17DS63L4
11	193	118	4390	1.05	MDFAF37R17DS63L4
13	160	98	4780	1.25	MDF37R17DS63L4
15	140	87	4970	1.45	MDFF37R17DS63L4
3.1	765	281.71	19100	1.95	
3.3	715	262.93	19200	2.1	MDFA77DS71S6
3.9	615	225.79	19500	2.5	MDFAF77DS71S6
4.4	540	198.31	19600	2.8	MDF77DS71S6
4.7	510	188.40	19700	2.9	MDFF77DS71S6
3.8	620	228.99	11800	1.30	
4.5	530	195.39	12300	1.55	MDFA67DS71S6
5.2	465	170.85	12600	1.75	MDFAF67DS71S6
5.4	440	162.31	12700	1.85	MDF67DS71S6
6.2	385	142.40	12900	2.1	MDFF67DS71S6
5.7	420	228.99	12700	1.95	
6.7	360	195.39	13000	2.3	MDFA67DS63L4
7.6	315	170.85	13000	2.6	MDFAF67DS63L4
8.0	300	162.31	13000	2.8	MDF67DS63L4
9.1	260	142.40	13000	3.1	MDFF67DS63L4
4.4	540	199.70	9630	1.10	
4.8	500	183.60	9940	1.20	MDFA57DS71S6
5.6	425	157.09	10400	1.40	MDFAF57DS71S6
6.5	370	136.16	10800	1.60	MDF57DS71S6
6.9	345	127.27	10900	1.75	MDFF57DS71S6
8.0	300	110.01	11100	2.0	
6.5	365	199.70	10800	1.65	
7.1	335	183.60	10900	1.80	MDFA57DS63L4
8.3	290	157.09	11200	2.1	MDFAF57DS63L4
9.6	250	136.16	11400	2.4	MDF57DS63L4
10	235	127.27	11500	2.6	MDFF57DS63L4
12	200	110.01	11500	3.0	
5.9	405	150.06	5750	1.00	MDFA47DS71S6
6.8	355	130.07	6530	1.15	MDFAF47DS71S6
7.2	330	121.57	6770	1.20	MDF47DS71S6
8.4	285	105.09	7190	1.40	MDFF47DS71S6
6.8	350	190.76	6550	1.15	
7.4	320	175.38	6850	1.25	
8.7	275	150.06	7270	1.45	MDFA47DS63L4
10	240	130.07	7540	1.65	MDFAF47DS63L4
11	225	121.57	7640	1.80	MDF47DS63L4
12	193	105.09	7810	2.1	MDFF47DS63L4
15	164	89.29	7950	2.4	
10	235	128.51	3690	0.85	MDFA37DS63L4
11	215	117.88	4040	0.90	MDFAF37DS63L4
13	184	100.36	4500	1.10	MDF37DS63L4
15	159	86.53	4790	1.25	MDFF37DS63L4

n_a [1/min]	M_a [Nm]	i	F_{Ra} [N]	f_B	typ motoreduktora *gearmotor type*
0.25kW					
16	148	80.65	4900	1.35	
18	130	70.50	5060	1.55	
20	121	66.09	5120	1.65	
22	107	58.32	5210	1.85	
24	100	54.54	5260	2.0	MDFA37DS63L4
25	95	51.70	5280	2.1	MDFAF37DS63L4
28	86	47.02	5330	2.3	MDF37DS63L4
30	81	43.83	5360	2.5	MDFF37DS63L4
34	70	38.31	5400	2.8	
36	66	35.91	5420	3.0	
41	58	31.69	5450	3.4	
46	52	28.09	5430	3.9	
54	44	23.88	5180	4.6	
55	43	23.63	5170	4.6	
63	38	20.57	4960	5.3	
67	35	19.27	4870	5.7	
76	31	17.03	4690	6.4	
82	29	15.81	4590	6.9	
91	26	14.33	4460	7.6	
101	24	12.87	4320	8.5	MDFA37DS63L4
117	20	11.08	4120	9.3	MDFAF37DS63L4
125	19	10.42	4050	9.7	MDF37DS63L4
145	17	8.97	3860	11	MDFF37DS63L4
175	14	7.44	3630	11	
193	12	6.74	3520	11	
215	11	6.05	3410	12	
249	9.6	5.21	3250	13	
265	9.0	4.90	3190	13	
308	7.7	4.22	3040	14	
0.37kW					
0.21	14900	6715	84800	0.80	
0.23	13100	5925	88300	0.90	
0.27	11300	5153	90000	1.05	MDFA127R77DS71S4
0.30	9850	4533	90000	1.20	MDFAF127R77DS71S4
0.35	8590	3926	90000	1.40	MDF127R77DS71S4
0.40	7510	3454	90000	1.60	MDFF127R77DS71S4
0.46	6570	3031	90000	1.85	
0.45	6720	3037	52300	1.15	
0.50	6090	2756	53800	1.25	MDFA107R77DS71S4
0.58	5240	2369	55800	1.45	MDFAF107R77DS71S4
0.67	4570	2068	57200	1.70	MDF107R77DS71S4
0.86	3510	1597	59400	2.2	MDFF107R77DS71S4
0.61	5070	2245	5160	0.85	
0.70	4430	1970	29500	0.95	
0.80	3900	1722	31000	1.10	MDFA97R57DS71S4
0.90	3460	1527	32200	1.25	MDFAF97R57DS71S4
1.0	2930	1327	33500	1.45	MDF97R57DS71S4
1.2	2650	1171	34100	1.60	MDFF97R57DS71S4
1.4	2310	1022	34800	1.85	
1.5	1960	898	35500	2.2	
1.1	2870	1300	23400	1.05	MDFA87R57DS71S4
1.2	2550	1148	24600	1.20	MDFAF87R57DS71S4
1.4	2230	1010	25700	1.35	MDF87R57DS71S4
					MDFF87R57DS71S4

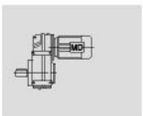

n_a [1/min]	M_a [Nm]	i	F_{Ra} [N]	f_B	typ motoreduktora *gearmotor type*
0.37kW					
1.6	1970	887	26500	1.50	
1.8	1720	780	27200	1.75	MDFA87R57DS71S4
2.0	1470	674	27900	2.0	MDFAF87R57DS71S4
2.3	1340	609	28200	2.2	MDF87R57DS71S4
2.7	1130	515	28700	2.7	MDFF87R57DS71S4
3.0	1000	452	29000	3.0	
1.7	1810	810	13300	0.85	
1.9	1590	710	15100	0.95	
2.2	1390	615	16400	1.10	MDFA77R37DS71S4
2.6	1210	538	17400	1.25	MDFAF77R37DS71S4
2.9	1080	480	18000	1.40	MDF77R37DS71S4
3.3	920	413	18600	1.65	MDFF77R37DS71S4
3.8	830	367	18900	1.80	
4.3	730	323	19200	2.0	
3.2	980	437	5750	0.85	
3.6	870	384	9880	0.95	MDFA67R37DS71S4
4.1	770	338	10800	1.05	MDFAF67R37DS71S4
4.5	685	305	11400	1.20	MDF67R37DS71S4
5.4	575	257	12000	1.40	MDFF67R37DS71S4
6.0	510	231	12400	1.60	
5.4	570	255	9420	1.05	MDFA57R37DS71S4
6.9	445	201	10300	1.35	MDFAF57R37DS71S4
7.6	405	181	10500	1.50	MDF57R37DS71S4
					MDFF57R37DS71S4
5.3	605	262	9170	1.00	
6.1	515	226	9810	1.15	MDFA57R37DS71S4
6.9	455	200	10200	1.30	MDFAF57R37DS71S4
8.1	385	170	10700	1.55	MDF57R37DS71S4
9.1	345	152	10900	1.75	MDFF57R37DS71S4
10	300	134	11100	2.0	
7.9	395	175	5990	1.00	MDFA47R17DS71S4
9.4	335	147	6740	1.20	MDFAF47R17DS71S4
11	295	130	7110	1.35	MDF47R17DS71S4
					MDFF47R17DS71S4
2.5	1410	270.68	28100	2.1	MDFA87D90S8
2.7	1330	255.37	28200	2.3	MDFAF87D90S8
3.0	1190	228.93	28600	2.5	MDF87D90S8
3.5	1020	197.20	28900	2.9	MDFF87D90S8
3.3	1060	270.68	28800	2.8	MDFA87DS71M6
3.5	1000	255.37	29000	3.0	MDFAF87DS71M6
3.9	900	228.93	29200	3.3	MDF87DS71M6
					MDFF87DS71M6
4.0	890	225.79	18700	1.70	
4.5	780	198.31	19100	1.95	MDFA77DS71M6
4.8	740	188.40	19200	2.0	MDFAF77DS71M6
5.4	655	166.47	19400	2.3	MDF77DS71M6
6.3	560	142.27	19600	2.7	MDFF77DS71M6
4.9	720	281.71	19200	2.1	MDFA77DS71S4
5.2	675	262.93	19300	2.2	MDFAF77DS71S4
6.1	580	225.79	19500	2.6	MDF77DS71S4
7.0	510	198.31	19700	3.0	MDFF77DS71S4

n_a [1/min]	M_a [Nm]	i	F_{Ra} [N]	f_B	typ motoreduktora *gearmotor type*
0.37kW					
4.6	765	195.39	10800	1.05	
5.3	670	170.85	11500	1.20	MDFA67DS71M6
5.6	635	162.31	11700	1.30	MDFAF67DS71M6
6.3	560	142.40	12100	1.45	MDF67DS71M6
7.4	475	120.79	12500	1.75	MDFF67DS71M6
6.0	585	228.99	12000	1.40	
7.1	500	195.39	12400	1.65	MDFA67DS71S4
8.1	435	170.85	12700	1.85	MDFAF67DS71S4
8.5	415	162.31	12800	1.95	MDF67DS71S4
9.7	365	142.40	12900	2.2	MDFF67DS71S4
11	310	120.79	13000	2.7	
5.7	615	157.09	9070	0.95	MDFA57DS71M6
6.6	535	136.16	9680	1.10	MDFAF57DS71M6
7.1	500	127.27	9930	1.20	MDF57DS71M6
8.2	430	110.01	10400	1.40	MDFF57DS71M6
6.9	510	199.70	9850	1.15	
7.5	470	183.60	10100	1.30	
8.8	400	157.09	10600	1.50	MDFA57DS71S4
10	350	136.16	10900	1.70	MDFAF57DS71S4
11	325	127.27	11000	1.85	MDF57DS71S4
13	280	110.01	11200	2.1	MDFF57DS71S4
15	240	93.47	11500	2.5	
17	215	83.46	11500	2.8	
9.2	385	150.06	6140	1.05	
11	335	130.07	6740	1.20	
13	270	105.09	7320	1.50	MDFA47DS71S4
15	230	89.29	7600	1.75	MDFAF47DS71S4
17	205	79.72	7750	1.95	MDF47DS71S4
20	174	68.09	7900	2.3	MDFF47DS71S4
21	167	65.36	7930	2.4	
16	220	86.53	3960	0.90	
17	205	80.65	4200	0.95	
20	181	70.50	4550	1.10	
21	169	66.09	4680	1.20	
24	149	58.32	4890	1.35	
25	140	54.54	4970	1.45	MDFA37DS71S4
27	132	51.70	5030	1.50	MDFAF37DS71S4
29	120	47.02	5120	1.65	MDF37DS71S4
31	112	43.83	5180	1.80	MDFF37DS71S4
36	98	38.31	5270	2.0	
38	92	35.91	5300	2.2	
44	81	31.69	5300	2.5	
49	72	28.09	5140	2.8	
58	61	23.88	4930	3.3	
58	61	23.63	4920	3.3	
67	53	20.57	4740	3.8	
72	49	19.27	4650	4.1	
81	44	17.03	4500	4.6	MDFA37DS71S4
87	41	15.81	4400	4.9	MDFAF37DS71S4
96	37	14.33	4280	5.4	MDF37DS71S4
107	33	12.87	4150	6.1	MDFF37DS71S4
125	28	11.08	3970	6.7	
132	27	10.42	3900	6.9	

n_a [1/min]	M_a [Nm]	i	F_{Ra} [N]	f_B	typ motoreduktora *gearmotor type*
0.37kW					
154	23	8.97	3730	7.6	MDFA37DS71S4 MDFAF37DS71S4 MDF37DS71S4 MDFF37DS71S4
186	19	7.44	3510	7.6	
205	17	6.74	3410	8.1	
228	16	6.05	3300	8.7	
265	13	5.21	3150	9.4	
282	13	4.90	3090	9.6	
327	11	4.22	2950	10	
0.55kW					
0.09	58361	15770	190000	0.86	MDFH177R97DS71M4 MDF177R97DS71M4
0.10	52525	14005	190000	0.95	
0.12	43771	12521	190000	1.14	
0.13	40404	11258	190000	1.24	
0.15	35017	9771	190000	1.43	
0.16	32828	8829	190000	1.52	
0.18	29180	8113	190000	1.71	
0.20	26262	7204	190000	1.90	
0.15	31873	9585	150000	1.00	MDFA167R97DS71M4 MDFAF167R97DS71M4 MDF167R97DS71M4 MDFF167R97DS71M4
0.19	24238	7289	150000	1.32	
0.23	19782	5949	150000	1.62	
0.31	15067	4531	150000	2.12	
0.22	20500	6295	92000	0.90	MDFA157R97DS71M4 MDFAF157R97DS71M4 MDF157R97DS71M4 MDFF157R97DS71M4
0.25	17400	5404	102100	1.05	
0.49	8930	2780	118700	2.0	
0.56	7760	2427	120000	2.3	MDFA157R97DS71M4 MDFAF157R97DS71M4 MDF157R97DS71M4 MDFF157R97DS71M4
0.81	5520	1674	120000	3.3	
1.0	4220	1308	120000	4.3	
1.2	3730	1169	120000	4.8	
0.35	13300	3926	88000	0.90	MDFA127R77DS71M4 MDFAF127R77DS71M4 MDF127R77DS71M4 MDFF127R77DS71M4
0.39	11600	3454	90000	1.05	
0.45	10200	3031	90000	1.20	
0.57	8100	2369	48700	0.95	MDFA107R77DS71M4 MDFAF107R77DS71M4 MDF107R77DS71M4 MDFF107R77DS71M4
0.66	7070	2068	51400	1.10	
0.74	6110	1826	53800	1.25	
0.85	5440	1597	55300	1.40	
0.97	4750	1401	56900	1.60	
1.1	4160	1243	58100	1.85	
1.2	3700	1087	59000	2.1	
1.4	3180	950	60000	2.4	
1.6	2770	834	60800	2.8	
2.1	2150	640	61900	3.6	
1.0	4530	1327	29200	0.95	MDFA97R57DS71M4 MDFAF97R57DS71M4 MDF97R57DS71M4 MDFF97R57DS71M4
1.2	4060	1171	30600	1.05	
1.3	3550	1022	32000	1.20	
1.5	3050	898	33200	1.40	
1.7	2690	784	34000	1.60	
2.0	2340	690	34700	1.85	
2.2	2060	605	35300	2.1	
2.6	1790	529	35800	2.4	
2.9	1580	467	36100	2.7	

n_a [1/min]	M_a [Nm]	i	F_{Ra} [N]	f_B	typ motoreduktora *gearmotor type*
0.55kW					MDFA97R57DS71M4 MDFAF97R57DS71M4 MDF97R57DS71M4 MDFF97R57DS71M4
3.4	1360	406	36500	3.2	
3.7	1220	363	36700	3.5	
1.5	3040	887	18200	1.00	MDFA87R57DS71M4 MDFAF87R57DS71M4 MDF87R57DS71M4 MDFF87R57DS71M4
1.7	2660	780	24200	1.15	
2.0	2290	674	25500	1.30	
2.2	2080	609	26200	1.45	
2.6	1750	515	27100	1.70	
3.0	1540	452	27700	1.95	
3.9	1160	345	28600	2.6	MDFA77R37DS71M4 MDFAF77R37DS71M4 MDF77R37DS71M4 MDFF77R37DS71M4
2.5	1860	538	9980	0.80	
2.8	1660	480	14600	0.90	
3.3	1420	413	16200	1.05	
3.7	1270	367	17100	1.20	
4.2	1120	323	17800	1.35	
5.3	890	257	9660	0.90	MDFA67R37DS71M4 MDFAF67R37DS71M4 MDF67R37DS71M4 MDFF67R37DS71M4
5.9	790	231	10600	1.05	
6.6	705	205	11200	1.15	
7.8	600	175	11900	1.35	
2.5	2140	276.77	35100	2.0	MDFA97D90L8 MDFAF97D90L8 MDF97D90L8 MDFF97D90L8
2.7	1960	253.41	35500	2.2	
3.0	1730	223.88	35900	2.5	
2.5	2090	270.68	26200	1.45	MDFA87D90L8 MDFAF87D90L8 MDF87D90L8 MDFF87D90L8
2.7	1970	255.37	26500	1.50	
3.0	1770	228.93	27100	1.70	
3.5	1520	197.20	27800	1.95	
3.3	1580	270.68	27600	1.90	MDFA87DS80S6 MDFAF87DS80S6 MDF87DS80S6 MDFF87DS80S6
3.5	1490	255.37	27800	2.0	
3.9	1340	228.93	28200	2.2	
4.6	1150	197.20	28700	2.6	
5.0	1050	179.97	28900	2.9	
4.0	1320	225.79	16800	1.15	MDFA77DS80S6 MDFAF77DS80S6 MDF77DS80S6 MDFF77DS80S6
4.5	1160	198.31	17600	1.30	
4.8	1100	188.40	17900	1.35	
5.4	970	166.47	18400	1.55	
6.3	830	142.27	18900	1.80	
6.9	760	130.42	19100	1.95	
6.0	870	225.79	18800	1.70	MDFA77DS71M4 MDFAF77DS71M4 MDF77DS71M4 MDFF77DS71M4
6.9	765	198.31	19100	1.95	
7.2	730	188.40	19200	2.1	
8.2	645	166.47	19400	2.3	
9.6	550	142.27	19600	2.7	
10	505	130.42	19700	3.0	
12	440	114.45	19800	3.4	
13	420	108.46	19800	3.6	
14	365	94.93	19900	4.1	
7.0	755	195.39	10900	1.10	MDFA67DS71M4 MDFAF67DS71M4 MDF67DS71M4 MDFF67DS71M4
8.0	660	170.85	11500	1.25	
8.4	625	162.31	11700	1.30	
9.6	550	142.40	12200	1.50	
11	465	120.79	12600	1.75	
12	420	109.04	12700	1.95	
14	370	95.94	12900	2.2	
15	350	90.59	13000	2.3	
17	310	79.76	13000	2.7	

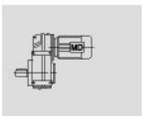

n_a [1/min]	M_a [Nm]	i	F_{Ra} [N]	f_B	typ motoreduktora *gearmotor type*
0.55kW					
8.7	605	157.09	9150	1.00	MDFA57DS71M4 MDFAF57DS71M4 MDF57DS71M4 MDFF57DS71M4
10	525	136.16	9750	1.15	
11	490	127.27	9980	1.20	
12	425	110.01	10400	1.40	
15	360	93.47	10800	1.65	
16	320	83.46	11000	1.85	
19	280	72.98	11200	2.1	
20	265	68.22	11300	2.3	
23	230	58.97	11500	2.6	
13	405	105.09	5840	1.00	MDFA47DS71M4 MDFAF47DS71M4 MDF47DS71M4 MDFF47DS71M4
15	345	89.29	6620	1.15	
17	310	79.72	6990	1.30	
20	265	68.09	7370	1.50	
21	250	65.36	7440	1.60	
24	220	56.49	7670	1.85	
28	185	48.00	7850	2.2	
32	166	42.86	7940	2.4	
23	225	58.32	3890	0.90	MDFA37DS71M4 MDFAF37DS71M4 MDF37DS71M4 MDFF37DS71M4
25	210	54.54	4140	0.95	
26	200	51.70	4300	1.00	
29	182	47.02	4540	1.10	
31	169	43.83	4680	1.20	
36	148	38.31	4900	1.35	
38	139	35.91	4980	1.45	
43	122	31.69	4990	1.65	
48	109	28.09	4870	1.85	
57	92	23.88	4700	2.2	
58	91	23.63	4690	2.2	MDFA37DS71M4 MDFAF37DS71M4 MDF37DS71M4 MDFF37DS71M4
66	79	20.57	4540	2.5	
71	74	19.27	4470	2.7	
80	66	17.03	4340	3.0	
95	55	14.33	4150	3.6	
106	50	12.87	4030	4.0	
123	43	11.08	3870	4.4	
130	40	10.42	3810	4.6	
152	35	8.97	3650	5.1	
170	31	8.01	3540	5.5	
183	29	7.44	3440	5.1	
202	26	6.74	3340	5.4	
225	23	6.05	3240	5.8	
261	20	5.21	3100	6.2	
277	19	4.90	3050	6.3	
322	16	4.22	2920	6.8	
361	15	3.77	2820	7.2	
0.75kW					
0.13	55096	11258	190000	0.91	MDFH177R97DS80S4 MDF177R97DS80S4
0.15	47750	9771	190000	1.05	
0.16	44766	8829	190000	1.12	
0.18	39792	8113	190000	1.26	
0.2	35812	7204	190000	1.40	
0.21	34107	6991	190000	1.46	
0.23	31141	6442	190000	1.60	

n_a [1/min]	M_a [Nm]	i	F_{Ra} [N]	f_B	typ motoreduktora *gearmotor type*
0.75kW					
0.25	28650	5792	190000	1.74	MDFH177R97DS80S4 MDF177R97DS80S4
0.28	25580	5219	190000	1.95	
0.19	33294	7289	150000	0.96	MDFA167R97DS80S4 MDFAF167R97DS80S4 MDF167R97DS80S4 MDFF167R97DS80S4
0.23	27171	5949	150000	1.18	
0.30	20696	4531	150000	1.55	
0.37	17129	3750	150000	1.87	
0.45	13977	3060	150000	2.29	
0.50	12300	2780	113600	1.45	MDFA157R97DS80S4 MDFAF157R97DS80S4 MDF157R97DS80S4 MDFF157R97DS80S4
0.57	10700	2427	116200	1.70	
0.82	7580	1674	120000	2.4	
1.1	5830	1308	120000	3.1	
1.2	5170	1169	120000	3.5	
0.46	13800	3031	86900	0.85	MDFA127R77DS80S4 MDFAF127R77DS80S4 MDF127R77DS80S4 MDFF127R77DS80S4
0.52	12400	2672	89600	0.95	MDFA127R77DS80S4 MDFAF127R77DS80S4 MDF127R77DS80S4 MDFF127R77DS80S4
0.59	10900	2357	90000	1.10	
0.68	9390	2038	90000	1.30	
0.77	8790	1784	90000	1.45	
0.86	7350	1606	90000	1.65	
0.76	8360	1826	48000	0.90	MDFA107R77DS80S4 MDFAF107R77DS80S4 MDF107R77DS80S4 MDFF107R77DS80S4
0.86	7400	1597	50500	1.05	
0.98	6470	1401	52900	1.20	
1.1	5690	1243	54800	1.35	
1.3	5040	1087	56200	1.50	
1.5	4350	950	57700	1.75	
1.7	3800	834	58800	2.00	
2.2	2940	640	60500	2.60	
3.2	2000	436	62200	3.80	
1.4	4810	1022	22800	0.90	MDFA97R57DS80S4 MDFAF97R57DS80S4 MDF97R57DS80S4 MDFF97R57DS80S4
1.5	4150	898	30300	1.05	
1.8	3660	784	31700	1.20	
2.0	3190	690	32900	1.35	
2.3	2800	605	33800	1.55	
2.6	2440	529	34500	1.75	
3.0	2160	467	35100	2.00	
3.4	1860	406	35600	2.30	
3.8	1670	363	36000	2.60	
2.0	3120	674	14700	0.95	MDFA87R57DS80S4 MDFAF87R57DS80S4 MDF87R57DS80S4 MDFF87R57DS80S4
2.3	2830	609	23600	1.05	
2.7	2390	515	25200	1.25	
3.0	2100	452	26100	1.45	
4.0	1590	345	27600	1.90	
3.8	1720	367	14100	0.85	MDFA77R37DS80S4 MDFAF77R37DS80S4 MDF77R37DS80S4 MDFF77R37DS80S4
4.3	1520	323	15600	1.00	
4.9	1310	280	16900	1.15	
2.7	2640	254.40	61100	2.9	MDFA107D100M8 MDFAF107D100M8 MDF107D100M8 MDFF107D100M8

n_a [1/min]	M_a [Nm]	i	F_{Ra} [N]	f_B	typ motoreduktora *gearmotor type*
0.75kW					
2.5	2870	276.77	33600	1.50	MDFA97D100M8 MDFAF97D100M8
2.7	2630	253.41	34100	1.65	MDF97D100M8
3.1	2320	223.88	34800	1.85	MDFF97D100M8
3.2	2200	276.77	35000	1.95	MDFA97DS80M6 MDFAF97DS80M6
3.5	2020	253.41	35400	2.1	MDF97DS80M6
4.0	1780	223.88	35800	2.4	MDFF97DS80M6
3.3	2150	270.68	26000	1.40	
3.5	2030	255.37	26300	1.50	MDFA87DS80M6
3.9	1820	228.93	27000	1.65	MDFAF87DS80M6
4.6	1570	197.20	27600	1.90	MDF87DS80M6
5.0	1430	179.97	28000	2.1	MDFF87DS80M6
5.6	1270	159.61	28400	2.4	
5.1	1400	270.68	28100	2.1	MDFA87DS80S4
5.4	1330	255.37	28200	2.3	MDFAF87DS80S4
6.0	1190	228.93	28600	2.5	MDF87DS80S4 MDFF87DS80S4
4.5	1580	198.31	15200	0.95	
4.8	1500	188.40	15700	1.00	MDFA77DS80M6
5.4	1320	166.47	16800	1.15	MDFAF77DS80M6
6.3	1130	142.27	17800	1.30	MDF77DS80M6
6.9	1040	130.42	18200	1.45	MDFF77DS80M6
6.1	1170	225.79	17600	1.30	
7.0	1030	198.31	18200	1.45	
7.3	980	188.40	18400	1.55	MDFA77DS80S4
8.3	860	166.47	18800	1.75	MDFAF77DS80S4
9.7	740	142.27	19200	2.0	MDF77DS80S4
11	675	130.42	19300	2.2	MDFF77DS80S4
12	595	114.45	19500	2.5	
13	565	108.46	19600	2.7	
8.1	890	170.85	9670	0.90	MDFA67DS80S4
8.5	840	162.31	10100	0.95	MDFAF67DS80S4
9.7	740	142.40	11000	1.10	MDF67DS80S4
11	625	120.79	11700	1.30	MDFF67DS80S4
13	565	109.04	12100	1.45	
14	500	95.94	12400	1.65	MDFA67DS80S4
15	470	90.59	12500	1.75	MDFAF67DS80S4
17	415	79.76	12800	2.0	MDF67DS80S4
20	350	67.65	13000	2.3	MDFF67DS80S4
23	315	61.07	13000	2.6	
11	660	127.27	5290	0.90	
13	570	110.01	9420	1.05	
15	485	93.47	10000	1.25	
17	435	83.46	10400	1.40	MDFA57DS80S4
19	380	72.98	10700	1.60	MDFAF57DS80S4
20	355	68.22	10800	1.70	MDF57DS80S4
23	305	58.97	11100	1.95	MDFF57DS80S4
28	260	50.10	11300	2.3	
31	230	44.73	11400	2.6	
17	415	79.72	5060	0.95	MDFA47DS80S4
20	355	68.09	6520	1.15	MDFAF47DS80S4
21	340	65.36	6680	1.20	MDF47DS80S4 MDFF47DS80S4

n_a [1/min]	M_a [Nm]	i	F_{Ra} [N]	f_B	typ motoreduktora *gearmotor type*
0.75kW					
24	295	56.49	7120	1.35	
29	250	48.00	7470	1.60	MDFA47DS80S4
32	220	42.86	7640	1.80	MDFAF47DS80S4
38	190	36.61	7820	2.1	MDF47DS80S4
40	178	34.29	7850	2.2	MDFF47DS80S4
48	150	28.88	7540	2.7	
29	245	47.02	3530	0.80	
31	230	43.83	3850	0.90	
36	199	38.31	4310	1.00	MDFA37DS80S4
38	186	35.91	4480	1.05	MDFAF37DS80S4
44	165	31.69	4620	1.20	MDF37DS80S4
49	146	28.09	4540	1.35	MDFF37DS80S4
58	124	23.88	4410	1.60	
58	123	23.63	4400	1.65	
67	107	20.57	4290	1.85	
72	100	19.27	4240	2.0	
81	88	17.03	4130	2.3	
96	74	14.33	3970	2.7	
107	67	12.87	3870	3.0	
125	58	11.08	3730	3.3	MDFA37DS80S4
132	54	10.42	3680	3.4	MDFAF37DS80S4
154	47	8.97	3540	3.8	MDF37DS80S4
205	35	6.74	3250	4.0	MDFF37DS80S4
228	31	6.05	3150	4.3	
265	27	5.21	3030	4.6	
282	25	4.90	2970	4.7	
327	22	4.22	2850	5.0	
366	20	3.77	2760	5.4	
1.1kW					
0.20	52525	7204	190000	0.95	
0.21	50024	6991	190000	1.00	
0.23	45674	6442	190000	1.09	
0.25	42020	5792	190000	1.19	MDFH177R97DS80M4
0.28	37518	5219	190000	1.33	MDF177R97DS80M4
0.33	31833	4339	190000	1.57	
0.35	30014	4103	190000	1.67	
0.39	26936	3681	190000	1.87	
0.31	30135	4531	150000	1.06	MDFA167R97DS80M4
0.37	24941	3750	150000	1.28	MDFAF167R97DS80M4
0.45	20352	3060	150000	1.57	MDF167R97DS80M4
0.68	13985	2056	150000	2.29	MDFF167R97DS80M4
0.50	18200	2780	99800	1.00	MDFA157R97DS80M4 MDFAF157R97DS80M4 MDF157R97DS80M4 MDFF157R97DS80M4
0.58	16000	2427	105800	1.15	
0.64	14300	2185	109700	1.25	MDFA157R97DS80M4
0.72	12700	1944	112900	1.40	MDFAF157R97DS80M4
0.84	11200	1674	115500	1.60	MDF157R97DS80M4
1.1	8640	1308	119000	2.1	MDFF157R97DS80M4
1.2	7680	1169	120000	2.3	

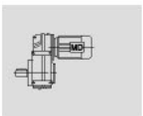

n_a [1/min]	M_a [Nm]	i	F_{Ra} [N]	f_B	typ motoreduktora *gearmotor type*
1.1kW					
1.5	6190	953	120000	2.9	MDFA157R97DS80M4
1.7	5450	845	120000	3.3	MDFAF157R97DS80M4
3.1	2880	446	120000	6.2	MDF157R97DS80M4
4.6	1950	302	120000	9.2	MDFF157R97DS80M4
0.69	13800	2038	87000	0.85	
0.79	12000	1784	90000	1.00	MDFA127R77DS80M4
0.87	10800	1606	90000	1.10	MDFAF127R77DS80M4
1.0	9350	1390	90000	1.30	MDF127R77DS80M4
1.1	8170	1220	90000	1.45	MDFF127R77DS80M4
1.3	7260	1077	90000	1.65	
1.1	8360	1243	48000	0.90	
1.3	7370	1087	50600	1.05	MDFA107R77DS80M4
1.5	6390	950	53100	1.20	MDFAF107R77DS80M4
1.7	5590	834	55000	1.35	MDF107R77DS80M4
1.9	4910	736	56500	1.55	MDFF107R77DS80M4
2.2	4310	640	57800	1.80	
2.0	4670	690	27800	0.90	
2.3	4100	605	30500	1.05	MDFA97R57DS80M4
2.7	3580	529	31900	1.20	MDFAF97R57DS80M4
3.0	3160	467	32900	1.35	MDF97R57DS80M4
3.5	2730	406	33900	1.55	MDFF97R57DS80M4
3.8	2450	363	34500	1.75	
3.1	3070	452	16900	1.00	MDFA87R57DS80M4
4.1	2330	345	25400	1.30	MDFAF87R57DS80M4
4.7	2020	300	26400	1.50	MDF87R57DS80M4
5.6	1670	249	27400	1.80	MDFF87R57DS80M4
2.7	3930	254.40	58600	1.95	MDFA107D100L8
3.2	3330	215.37	59800	2.3	MDFAF107D100L8
3.4	3080	199.31	60200	2.5	MDF107D100L8
3.8	2760	178.64	60800	2.8	MDFF107D100L8
3.3	3160	276.77	32900	1.35	
3.6	2890	253.41	33600	1.50	MDFA97DS90L6
4.1	2560	223.88	34300	1.70	MDFAF97DS90L6
4.8	2170	189.92	35100	2.0	MDF97DS90L6
5.3	2000	174.87	35400	2.2	MDFF97DS90L6
5.1	2080	276.77	35200	2.1	MDFA97DS80M4
5.5	1900	253.41	35600	2.3	MDFAF97DS80M4
6.2	1680	223.88	36000	2.6	MDF97DS80M4
					MDFF97DS80M4
3.4	3090	270.68	16000	0.95	
3.6	2920	255.37	22700	1.05	MDFA87DS90L6
4.0	2610	228.93	24400	1.15	MDFAF87DS90L6
4.7	2250	197.20	25700	1.35	MDF87DS90L6
5.1	2050	179.97	26300	1.45	MDFF87DS90L6
5.8	1820	159.61	27000	1.65	
5.2	2030	270.68	26300	1.50	MDFA87DS80M4
5.5	1920	255.37	26700	1.55	MDFAF87DS80M4
6.1	1720	228.93	27200	1.75	MDF87DS80M4
7.1	1480	197.20	27900	2.0	MDFF87DS80M4
7.8	1350	179.97	28200	2.2	MDFA87DS80M4
8.8	1200	159.61	28500	2.5	MDFAF87DS80M4
10	1010	134.16	29000	3.0	MDF87DS80M4
11	930	123.29	29100	3.2	MDFF87DS80M4

n_a [1/min]	M_a [Nm]	i	F_{Ra} [N]	f_B	typ motoreduktora *gearmotor type*
1.1kW					
7.1	1490	198.31	15800	1.00	MDFA77DS80M4
7.4	1410	188.40	16300	1.05	MDFAF77DS80M4
8.4	1250	166.47	17200	1.20	MDF77DS80M4
9.8	1070	142.27	18000	1.40	MDFF77DS80M4
11	980	130.42	18400	1.55	
12	860	114.45	18800	1.75	MDFA77DS80M4
13	810	108.46	18900	1.85	MDFAF77DS80M4
15	710	94.93	19200	2.1	MDF77DS80M4
16	640	85.52	19400	2.3	MDFF77DS80M4
19	565	75.02	19600	2.7	
12	910	120.79	9460	0.90	
13	820	109.04	10300	1.00	
15	720	95.94	11100	1.15	
15	680	90.59	11400	1.20	
18	600	79.76	11900	1.35	MDFA67DS80M4
21	510	67.65	12400	1.60	MDFAF67DS80M4
23	460	61.07	12600	1.80	MDF67DS80M4
26	405	53.73	12800	2.0	MDFF67DS80M4
28	380	50.74	12900	2.2	
32	325	43.20	13000	2.5	
36	295	39.26	13000	2.7	
41	255	34.01	13000	2.9	
17	625	83.46	8470	0.95	
19	550	72.98	9590	1.10	
21	510	68.22	9840	1.15	
24	440	58.97	10300	1.35	MDFA57DS80M4
28	375	50.10	10700	1.60	MDFAF57DS80M4
31	335	44.73	10700	1.80	MDF57DS80M4
37	285	38.21	10400	2.1	MDFF57DS80M4
39	270	35.79	10200	2.2	
46	225	30.15	9810	2.6	
					MDFA47DS80M4
25	425	56.49	3730	0.95	MDFAF47DS80M4
29	360	48.00	6440	1.10	MDF47DS80M4
					MDFF47DS80M4
33	320	42.86	6860	1.25	MDFA47DS80M4
38	275	36.61	7280	1.45	MDFAF47DS80M4
41	255	34.29	7260	1.55	MDF47DS80M4
48	215	28.88	7040	1.85	MDFF47DS80M4
45	230	30.86	7130	1.75	
48	220	29.32	7060	1.80	MDFA47DS80M4
54	193	25.72	6880	2.1	MDFAF47DS80M4
64	164	21.82	6640	2.4	MDF47DS80M4
71	148	19.70	6490	2.7	MDFF47DS80M4
44	240	31.69	3660	0.85	MDFA37DS80M4
50	210	28.09	3970	0.95	MDFAF37DS80M4
59	179	23.88	3930	1.10	MDF37DS80M4
					MDFF37DS80M4
68	154	20.57	3870	1.30	
73	145	19.27	3840	1.40	MDFA37DS80M4
82	128	17.03	3780	1.55	MDFAF37DS80M4
98	108	14.33	3680	1.85	MDF37DS80M4
109	97	12.87	3610	2.1	MDFF37DS80M4

n_a [1/min]	M_a [Nm]	i	F_{Ra} [N]	f_B	typ motoreduktora *gearmotor type*
1.1kW					
126	83	11.08	3500	2.3	MDFA37DS80M4 MDFAF37DS80M4 MDF37DS80M4 MDFF37DS80M4
134	78	10.42	3460	2.4	
156	67	8.97	3350	2.6	
175	60	8.01	3260	2.8	
208	51	6.74	3090	2.8	
231	45	6.05	3010	3.0	
269	39	5.21	2900	3.2	
286	37	4.90	2860	3.3	
332	32	4.22	2750	3.5	
372	28	3.77	2670	3.7	
1.5kW					
0.25	57300	5792	190000	0.87	MDFH177R97DS90M4 MDF177R97DS90M4
0.28	51161	5219	190000	0.98	
0.33	43409	4339	190000	1.15	
0.35	40928	4103	190000	1.22	
0.39	36731	3681	190000	1.36	
0.40	35812	3638	190000	1.40	
0.43	33314	3389	190000	1.50	
0.47	30479	3058	190000	1.64	
0.52	27548	2811	190000	1.81	
0.37	34011	3750	150000	0.94	MDFA167R97DS90M4 MDFAF167R97DS90M4 MDF167R97DS90M4 MDFF167R97DS90M4
0.45	27752	3060	150000	1.15	
0.68	19071	2056	150000	1.68	
0.73	17556	1893	150000	1.82	
0.89	14504	1564	150000	2.21	
0.58	21900	2427	86400	0.80	MDFA157R97DS90M4 MDFAF157R97DS90M4 MDF157R97DS90M4 MDFF157R97DS90M4
0.65	19700	2185	95000	0.90	
0.73	17500	1944	101700	1.05	
0.84	15300	1674	107400	1.20	
1.1	11900	1308	114400	1.50	
1.2	10600	1169	116400	1.70	
1.5	8540	953	119100	2.1	
1.7	7530	845	120000	2.4	
3.2	3980	446	120000	4.5	
4.7	2690	302	120000	6.7	
0.88	14800	1606	85000	0.80	MDFA127R77DS90M4 MDFAF127R77DS90M4 MDF127R77DS90M4 MDFF127R77DS90M4
1.0	12800	1390	89000	0.95	
1.2	11200	1220	90000	1.05	
1.3	9910	1077	90000	1.20	
1.5	8520	930	90000	1.40	
1.7	7500	820	90000	1.60	
1.9	6630	727	90000	1.80	
2.2	5960	648	90000	2.0	
1.5	8730	950	46900	0.90	MDFA107R77DS90M4 MDFAF107R77DS90M4 MDF107R77DS90M4 MDFF107R77DS90M4
1.7	7640	834	49900	1.00	
1.9	6730	736	52300	1.15	
2.2	5890	640	54300	1.30	
2.5	5110	560	56100	1.50	
2.9	4460	489	57500	1.70	
3.2	4010	436	58400	1.90	
3.8	3400	370	59600	2.3	

n_a [1/min]	M_a [Nm]	i	F_{Ra} [N]	f_B	typ motoreduktora *gearmotor type*
1.5kW					
2.7	4880	529	19800	0.90	MDFA97R57DS90M4 MDFAF97R57DS90M4 MDF97R57DS90M4 MDFF97R57DS90M4
3.0	4310	467	29900	1.00	
3.5	3730	406	31500	1.15	
3.9	3340	363	32500	1.30	
4.1	3180	345	11100	0.90	MDFA87R57DS90M4 MDFAF87R57DS90M4 MDF87R57DS90M4 MDFF87R57DS90M4
4.7	2760	300	23900	1.10	
5.7	2290	249	25500	1.30	
2.8	5210	254.40	55900	1.50	MDFA107D112M8 MDFAF107D112M8 MDF107D112M8 MDFF107D112M8
3.2	4410	215.37	57600	1.75	
3.5	4080	199.31	58300	1.90	
3.9	3660	178.64	59100	2.1	
3.6	3960	254.40	58500	1.95	MDFA107DS100M6 MDFAF107DS100M6 MDF107DS100M6 MDFF107DS100M6
4.3	3350	215.37	59700	2.3	
4.6	3100	199.31	60200	2.5	
5.2	2780	178.64	60800	2.8	
3.3	4310	276.77	29900	1.00	MDFA97DS100M6 MDFAF97DS100M6 MDF97DS100M6 MDFF97DS100M6
3.6	3950	253.41	30900	1.10	
4.1	3490	223.88	32100	1.25	
4.8	2960	189.92	33400	1.45	
5.3	2720	174.87	33900	1.60	
5.1	2810	276.77	33700	1.55	MDFA97DS90M4 MDFAF97DS90M4 MDF97DS90M4 MDFF97DS90M4
5.6	2570	253.41	34300	1.65	
6.3	2270	223.88	34900	1.90	
7.4	1930	189.92	35500	2.2	
8.1	1780	174.87	35800	2.4	
5.2	2750	270.68	23900	1.10	MDFA87DS90M4 MDFAF87DS90M4 MDF87DS90M4 MDFF87DS90M4
5.5	2590	255.37	24500	1.15	
6.2	2330	228.93	25400	1.30	
7.2	2000	197.20	26400	1.50	
7.8	1830	179.97	26900	1.65	MDFA87DS90M4 MDFAF87DS90M4 MDF87DS90M4 MDFF87DS90M4
8.8	1620	159.61	27500	1.85	
11	1360	134.16	28200	2.2	
13	1110	109.49	28700	2.7	
14	990	97.89	29000	3.0	
8.5	1690	166.47	14300	0.90	MDFA77DS90M4 MDFAF77DS90M4 MDF77DS90M4 MDFF77DS90M4
9.9	1450	142.27	16100	1.05	
11	1320	130.42	16800	1.15	
12	1160	114.45	17600	1.30	
13	1100	108.46	17900	1.35	MDFA77DS90M4 MDFAF77DS90M4 MDF77DS90M4 MDFF77DS90M4
15	960	94.93	18400	1.55	
16	870	85.52	18800	1.75	
19	760	75.02	19100	1.95	
19	735	72.50	19200	2.0	
21	675	66.46	19300	2.2	
24	595	58.32	19500	2.5	
26	560	55.27	19600	2.7	
29	490	48.37	19700	3.0	
32	445	43.58	19800	3.4	
37	390	38.23	19900	3.9	
39	370	36.58	19900	3.0	MDFA77DS90M4 MDFAF77DS90M4 MDF77DS90M4 MDFF77DS90M4
45	320	31.51	20000	4.3	

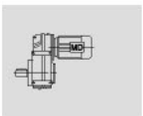

n_a [1/min]	M_a [Nm]	i	F_{Ra} [N]	f_B	typ motoreduktora *gearmotor type*
1.5kW					
16	920	90.59	9300	0.90	MDFA67DS90M4 MDFAF67DS90M4 MDF67DS90M4 MDFF67DS90M4
18	810	79.76	10400	1.00	
21	685	67.65	11400	1.20	
23	620	61.07	11800	1.30	
26	545	53.73	12200	1.50	
28	515	50.74	12300	1.60	
33	440	43.20	12700	1.85	
36	400	39.26	12800	1.95	
39	370	36.30	12900	2.2	MDFA67DS90M4 MDFAF67DS90M4 MDF67DS90M4 MDFF67DS90M4
44	325	32.08	13000	2.5	
51	280	27.41	13000	2.9	
56	255	25.13	13000	3.2	
24	600	58.97	9210	1.00	MDFA57DS90M4 MDFAF57DS90M4 MDF57DS90M4 MDFF57DS90M4
28	510	50.10	9860	1.20	
32	455	44.73	9990	1.30	
37	390	38.21	9740	1.55	
39	365	35.79	9620	1.65	
47	305	30.15	9310	1.95	
33	435	42.86	5750	0.90	MDFA47DS90M4 MDFAF47DS90M4 MDF47DS90M4 MDFF47DS90M4
39	370	36.61	6300	1.10	
41	350	34.29	6580	1.15	
49	295	28.88	6500	1.35	
46	315	30.86	6550	1.30	MDFA47DS90M4 MDFAF47DS90M4 MDF47DS90M4 MDFF47DS90M4
48	300	29.32	6510	1.35	
55	260	25.72	6390	1.55	
65	220	21.82	6230	1.80	
72	200	19.70	6110	2.0	
81	176	17.33	5970	2.3	
86	166	16.36	5900	2.4	
101	142	13.93	5700	2.8	
69	210	20.57	3410	0.95	MDFA37DS90M4 MDFAF37DS90M4 MDF37DS90M4 MDFF37DS90M4
73	196	19.27	3410	1.00	
83	173	17.03	3400	1.15	
98	146	14.33	3350	1.35	
110	131	12.87	3310	1.55	
127	113	11.08	3250	1.70	
135	106	10.42	3220	1.75	
157	91	8.97	3140	1.90	
176	81	8.01	3080	2.1	
209	69	6.74	2920	2.0	
233	62	6.05	2850	2.2	
271	53	5.21	2770	2.4	
288	50	4.90	2730	2.4	
334	43	4.22	2640	2.6	
374	38	3.77	2570	2.7	
2.2kW					
0.40	52525	3638	190000	0.95	MDFH177R97DS90L4 MDF177R97DS90L4
0.43	48860	3389	190000	1.02	
0.47	44702	3058	190000	1.12	
0.52	40404	2811	190000	1.24	
0.58	36224	2496	190000	1.38	
0.65	32323	2232	190000	1.55	

n_a [1/min]	M_a [Nm]	i	F_{Ra} [N]	f_B	typ motoreduktora *gearmotor type*
2.2kW					
0.72	29180	2006	190000	1.17	MDFH177R97DS90L4 MDF177R97DS90L4
0.75	28013	1930	190000	1.78	
0.83	25313	1741	190000	1.97	
0.56	32970	2514	150000	0.97	MDFA167R97DS90L4 MDFAF167R97DS90L4 MDF167R97DS90L4 MDFF167R97DS90L4
0.69	27574	2056	150000	1.16	
0.74	25383	1893	150000	1.26	
0.90	20970	1564	150000	1.53	
0.98	19304	1439	150000	1.66	
1.15	16398	1223	150000	1.95	
1.34	14068	1049	150000	2.27	
0.98	18900	1441	97500	0.95	MDFA157R97DS90L4 MDFAF157R97DS90L4 MDF157R97DS90L4 MDFF157R97DS90L4
1.1	17600	1308	101400	1.00	MDFA157R97DS90L4 MDFAF157R97DS90L4 MDF157R97DS90L4 MDFF157R97DS90L4
1.2	15700	1169	106500	1.15	
1.5	12700	953	112800	1.40	
1.7	11200	845	115400	1.60	
1.9	10100	764	117100	1.80	
2.1	9020	680	128600	2.0	
2.5	7610	576	120000	2.4	
3.2	5940	446	120000	3.0	
4.7	4020	302	120000	4.5	
5.2	3630	273	120000	5.0	
6.1	3060	232	120000	5.9	
7.2	2590	197	120000	6.9	
1.3	14600	1077	85300	0.80	MDFA127R77DS90L4 MDFAF127R77DS90L4 MDF127R77DS90L4 MDFF127R77DS90L4
1.5	12600	930	89300	0.95	
1.7	11100	820	90000	1.10	
1.9	9830	727	90000	1.20	
2.2	8810	648	90000	1.35	
2.6	7460	549	90000	1.60	
2.8	6720	495	90000	1.80	
3.3	5810	428	90000	2.1	
2.2	8700	640	47000	0.90	MDFA107R77DS90L4 MDFAF107R77DS90L4 MDF107R77DS90L4 MDFF107R77DS90L4
2.5	7580	560	50100	1.00	
2.9	6610	489	52500	1.15	
3.2	5930	436	54200	1.30	
3.8	5030	370	56300	1.55	
4.2	4520	333	57300	1.70	
3.9	4940	363	16500	0.85	MDFA97R57DS90L4 MDFAF97R57DS90L4 MDF97R57DS90L4 MDFF97R57DS90L4
4.9	3890	285	31100	1.10	
5.8	3340	245	32500	1.30	
2.8	7640	254.40	49900	1.00	MDFA107D132S8 MDFAF107D132S8 MDF107D132S8 MDFF107D132S8
3.2	6460	215.37	52900	1.20	
3.5	5980	199.31	54100	1.30	
3.9	5360	178.64	55500	1.45	
3.7	5690	254.40	54800	1.35	MDFA107DS100L6 MDFAF107DS100L6 MDF107DS100L6 MDFF107DS100L6
4.4	4810	215.37	56700	1.60	
4.7	4450	199.31	57500	1.70	
5.3	3990	178.64	58400	1.90	

n_a [1/min]	M_a [Nm]	i	F_{Ra} [N]	f_B	typ motoreduktora *gearmotor type*
2.2kW					
5.5	3790	254.40	58900	2.0	MDFA107DS90L4
6.6	3210	215.37	60000	2.4	MDFAF107DS90L4
7.1	2970	199.31	60400	2.6	MDF107DS90L4
7.9	2660	178.64	61000	2.9	MDFF107DS90L4
4.2	5000	223.88	12400	0.85	MDFA97DS100L6
4.9	4240	189.92	30100	1.00	MDFAF97DS100L6
5.4	3910	174.87	31000	1.10	MDF97DS100L6
6.0	3490	156.30	32100	1.25	MDFF97DS100L6
5.1	4120	276.77	30400	1.05	
5.6	3780	253.41	31400	1.15	
6.3	3340	223.88	32500	1.30	MDFA97DS90L4
7.4	2830	189.92	33700	1.50	MDFAF97DS90L4
8.1	2610	174.87	34200	1.65	MDF97DS90L4
9.0	2330	156.30	34800	1.85	MDFF97DS90L4
10	2100	140.71	35200	2.0	
11	1900	127.42	35600	2.3	
7.2	2940	197.20	22000	1.00	MDFA87DS90L4
7.8	2680	179.97	24200	1.10	MDFAF87DS90L4
8.8	2380	159.61	25200	1.25	MDF87DS90L4
11	2000	134.16	26400	1.50	MDFF87DS90L4
11	1840	123.29	26900	1.65	
13	1630	109.49	27500	1.85	
14	1460	97.89	27900	2.1	
16	1310	88.01	28300	2.3	MDFA87DS90L4
18	1140	76.39	27800	2.6	MDFAF87DS90L4
21	1020	68.40	27100	2.9	MDF87DS90L4
25	850	56.75	25900	3.5	MDFF87DS90L4
28	750	50.36	25200	3.9	
31	675	45.28	24500	4.2	
12	1710	114.45	14200	0.90	MDFA77DS90L4
13	1620	108.46	14900	0.95	MDFAF77DS90L4
15	1410	94.93	16300	1.05	MDF77DS90L4
16	1270	85.52	17100	1.20	MDFF77DS90L4
19	1120	75.02	17800	1.35	
21	990	66.46	18300	1.50	MDFA77DS90L4
24	870	58.32	18800	1.75	MDFAF77DS90L4
26	820	55.27	18900	1.80	MDF77DS90L4
29	720	48.37	19200	2.1	MDFF77DS90L4
32	650	43.58	19400	2.3	
39	545	36.58	19600	2.0	MDFA77DS90L4
45	470	31.51	19700	2.9	MDFAF77DS90L4
49	430	28.75	19800	3.3	MDF77DS90L4
55	380	25.50	19900	4.0	MDFF77DS90L4
23	910	61.07	9420	0.90	
26	800	53.73	10500	1.00	MDFA67DS90L4
28	755	50.74	10800	1.10	MDFAF67DS90L4
33	645	43.20	11600	1.25	MDF67DS90L4
36	585	39.26	12000	1.35	MDFF67DS90L4
41	505	34.01	12400	1.45	
44	480	32.08	12500	1.70	
51	410	27.41	12800	2.0	MDFA67DS90L4
56	375	25.13	12900	2.2	MDFAF67DS90L4
64	330	22.05	13000	2.5	MDF67DS90L4
67	310	20.90	13000	2.6	MDFF67DS90L4
77	275	18.29	13000	3.0	

n_a [1/min]	M_a [Nm]	i	F_{Ra} [N]	f_B	typ motoreduktora *gearmotor type*
2.2kW					
32	665	44.73	4480	0.90	MDFA57DS90L4
37	570	38.21	8660	1.05	MDFAF57DS90L4
39	535	35.79	8620	1.15	MDF57DS90L4
47	450	30.15	8460	1.30	MDFF57DS90L4
56	370	24.96	8240	1.55	
67	315	21.17	8020	1.90	MDFA57DS90L4
74	285	19.11	7870	2.1	MDFAF57DS90L4
84	250	16.81	7670	2.4	MDF57DS90L4
89	235	15.88	7580	2.5	MDFF57DS90L4
55	385	25.72	5560	1.05	
65	325	21.82	5520	1.25	MDFA47DS90L4
72	295	19.70	5480	1.35	MDFAF47DS90L4
81	260	17.33	5410	1.55	MDF47DS90L4
86	245	16.36	5370	1.65	MDFF47DS90L4
101	210	13.93	5250	1.95	MDFA47DS90L4
111	189	12.66	5170	2.1	MDFAF47DS90L4
129	163	10.97	5040	2.5	MDF47DS90L4
157	133	8.96	4740	2.5	MDFF47DS90L4
98	215	14.33	2790	0.95	
110	192	12.87	2810	1.05	
127	165	11.08	2820	1.15	
135	155	10.42	2810	1.20	
157	134	8.97	2790	1.30	MDFA37DS90L4
176	119	8.01	2770	1.40	MDFAF37DS90L4
209	100	6.74	2630	1.40	MDF37DS90L4
233	90	6.05	2590	1.50	MDFF37DS90L4
271	78	5.21	2540	1.60	
288	73	4.90	2520	1.65	
334	63	4.22	2460	1.75	
374	56	3.77	2400	1.85	
3.0kW					
0.52	55096	2811	190000	0.91	
0.58	49396	2496	190000	1.01	
0.65	44077	2232	190000	1.15	
0.72	39791	2006	190000	1.26	
0.75	38200	1930	190000	1.31	MDFH177R97DS100M4
0.83	34518	1741	190000	1.45	MDF177R97DS100M4
0.85	33705	1711	190000	1.48	
0.92	31141	1574	190000	1.61	
1.00	28650	1446	190000	1.74	
1.20	23875	1258	190000	2.09	
0.90	28596	1564	150000	1.12	
0.98	26324	1439	150000	1.22	
1.15	22361	1223	150000	1.43	MDFA167R97DS100M4
1.34	19183	1049	150000	1.67	MDFAF167R97DS100M4
1.50	17134	937	150000	1.87	MDF167R97DS100M4
1.68	15376	841	150000	2.08	MDFF167R97DS100M4
2.01	12847	703	150000	2.49	
1.2	21700	1169	87200	0.85	MDFA157R97DS100M4 MDFAF157R97DS100M4
1.5	17600	953	101300	1.00	MDF157R97DS100M4 MDFF157R97DS100M4

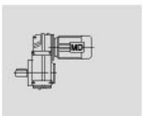

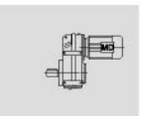

n_a [1/min]	M_a [Nm]	i	F_{Ra} [N]	f_B	typ motoreduktora *gearmotor type*
3.0kW					
1.7	15600	845	106700	1.15	MDFA157R97DS100M4 MDFAF157R97DS100M4 MDF157R97DS100M4 MDFF157R97DS100M4
1.8	14100	764	110100	1.30	
2.1	12500	680	113200	1.45	
2.4	10600	576	116400	1.70	
3.1	8250	446	119500	2.2	
4.6	5580	302	120000	3.2	
5.1	5040	273	120000	3.6	
6.1	4250	232	120000	4.2	
7.1	3610	197	120000	5.0	
1.9	13600	727	87400	0.90	MDFA127R77DS100M4 MDFAF127R77DS100M4 MDF127R77DS100M4 MDFF127R77DS100M4
2.2	12200	648	90000	1.00	
2.5	10300	549	90000	1.15	
2.8	9270	495	90000	1.30	
3.2	8170	436	48500	0.95	MDFA107R77DS100M4 MDFAF107R77DS100M4 MDF107R77DS100M4 MDFF107R77DS100M4
3.8	6930	370	51800	1.10	
4.2	6240	333	53500	1.25	
4.8	5460	291	55300	1.40	
3.7	7750	254.40	49600	1.00	MDFA107DS112M6 MDFAF107DS112M6 MDF107DS112M6 MDFF107DS112M6
4.4	6560	215.37	52700	1.15	
4.7	6070	199.31	53900	1.25	
5.3	5440	178.64	55300	1.40	
5.5	5210	254.40	55900	1.50	MDFA107DS100M4 MDFAF107DS100M4 MDF107DS100M4 MDFF107DS100M4
6.5	4410	215.37	57600	1.75	
7.0	4080	199.31	58300	1.90	
7.8	3660	178.64	59100	2.1	
8.7	3300	161.28	59800	2.3	
6.2	4580	223.88	29000	0.95	MDFA97DS100M4 MDFAF97DS100M4 MDF97DS100M4 MDFF97DS100M4
7.4	3890	189.92	31100	1.10	
8.0	3580	174.87	31900	1.20	
9.0	3200	156.30	32800	1.35	MDFA97DS100M4 MDFAF97DS100M4 MDF97DS100M4 MDFF97DS100M4
9.9	2880	140.71	33600	1.50	
11	2610	127.42	34200	1.65	
12	2310	112.99	34800	1.85	MDFA97DS100M4 MDFAF97DS100M4 MDF97DS100M4 MDFF97DS100M4
14	2090	102.16	35200	2.1	
16	1840	89.85	35700	2.3	
10	2750	134.16	23900	1.10	MDFA87DS100M4 MDFAF87DS100M4 MDF87DS100M4 MDFF87DS100M4
11	2520	123.29	24700	1.20	
13	2240	109.49	25700	1.35	
14	2000	97.89	26400	1.50	MDFA87DS100M4 MDFAF87DS100M4 MDF87DS100M4 MDFF87DS100M4
16	1800	88.01	26900	1.65	
18	1560	76.39	26300	1.90	
20	1400	68.40	25700	2.1	
25	1160	56.75	24800	2.6	
28	1030	50.36	24100	2.8	
16	1750	85.52	13800	0.85	MDFA77DS100M4 MDFAF77DS100M4 MDF77DS100M4 MDFF77DS100M4
19	1540	75.02	15500	1.00	
21	1360	66.46	16600	1.10	
24	1190	58.32	17500	1.25	

n_a [1/min]	M_a [Nm]	i	F_{Ra} [N]	f_B	typ motoreduktora *gearmotor type*
3.0kW					
25	1130	55.27	17800	1.35	MDFA77DS100M4 MDFAF77DS100M4 MDF77DS100M4 MDFF77DS100M4
29	990	48.37	18300	1.50	
32	890	43.58	18700	1.70	
37	780	38.23	19000	1.90	
38	750	36.58	19100	1.50	MDFA77DS100M4 MDFAF77DS100M4 MDF77DS100M4 MDFF77DS100M4
44	645	31.51	19400	2.1	
49	590	28.75	19500	2.4	
55	520	25.50	19700	2.9	
65	440	21.43	19800	3.4	
32	880	43.20	9690	0.95	MDFA67DS100M4 MDFAF67DS100M4 MDF67DS100M4 MDFF67DS100M4
36	800	39.26	10500	0.95	
41	695	34.01	11300	1.05	
44	655	32.08	11600	1.25	MDFA67DS100M4 MDFAF67DS100M4 MDF67DS100M4 MDFF67DS100M4
51	560	27.41	12100	1.45	
56	515	25.13	12300	1.60	
63	450	22.05	12600	1.80	
67	430	20.90	12700	1.90	
77	375	18.29	12900	2.2	
85	335	16.48	13000	2.4	
97	295	14.46	13000	2.8	
56	510	24.96	7440	1.15	MDFA57DS100M4 MDFAF57DS100M4 MDF57DS100M4 MDFF57DS100M4
66	435	21.17	7340	1.40	
73	390	19.11	7260	1.55	
83	345	16.81	7140	1.75	
88	325	15.88	7080	1.85	
104	275	13.62	6890	2.2	
114	250	12.29	6780	2.4	
132	220	10.64	6590	2.8	
71	405	19.70	4750	1.00	
81	355	17.33	4760	1.15	
86	335	16.36	4760	1.20	
100	285	13.93	4740	1.40	
111	260	12.66	4700	1.55	
128	225	10.97	4640	1.80	MDFA47DS100M4 MDFAF47DS100M4 MDF47DS100M4 MDFF47DS100M4
156	183	8.96	4370	1.80	
126	225	11.08	2320	0.85	MDFA37DS100M4 MDFAF37DS100M4 MDF37DS100M4 MDFF37DS100M4
134	215	10.42	2350	0.85	
156	184	8.97	2390	0.95	
175	164	8.01	2410	1.05	
208	138	6.74	2290	1.00	
231	124	6.05	2300	1.10	
269	107	5.21	2290	1.15	
286	100	4.90	2280	1.20	
332	86	4.22	2250	1.25	
372	77	3.77	2220	1.35	
4.0kW					
1.4	27286	1004	190000	1.83	MDFH177R107DS112M4 MDF177R107DS112M4
1.7	22470	876	190000	2.22	

n_a [1/min]	M_a [Nm]	i	F_{Ra} [N]	f_B	typ motoreduktora *gearmotor type*
4.0kW					
0.72	53056	2006	190000	0.94	MDFH177R107DS112M4 MDF177R107DS112M4
0.75	50933	1930	190000	0.98	
0.83	46024	1741	190000	1.09	
0.85	44941	1711	190000	1.11	
0.92	41522	1574	190000	1.2	
1.0	38200	1446	190000	1.31	
1.2	31833	1258	190000	1.57	
1.4	27286	1032	190000	1.83	
1.6	23875	888	190000	2.09	
1.2	29295	1223	150000	1.09	MDFA167R97DS112M4 MDFAF167R97DS112M4 MDF167R97DS112M4 MDFF167R97DS112M4
1.4	25132	1049	150000	1.27	
1.5	22447	937	150000	1.43	
1.7	20144	841	150000	1.59	
2.0	16831	703	150000	1.90	
2.7	12800	534	150000	2.50	
1.7	20600	845	91500	0.85	MDFA157R97DS112M4 MDFAF157R97DS112M4 MDF157R97DS112M4 MDFF157R97DS112M4
1.9	18600	764	98300	0.95	
2.1	16600	680	104200	1.10	
2.5	14000	576	110300	1.30	
3.2	10900	446	115900	1.65	
4.7	7390	302	120000	2.4	
5.2	6670	273	120000	2.7	
6.1	5640	232	120000	3.2	
7.2	4780	197	120000	3.8	
2.6	13600	549	87400	0.90	MDFA127R77DS112M4 MDFAF127R77DS112M4 MDF127R77DS112M4 MDFF127R77DS112M4
2.9	12200	495	90000	1.00	
3.3	10600	428	90000	1.15	
3.8	9270	376	90000	1.30	
4.3	8230	333	48300	0.95	MDFA107R77DS112M4 MDFAF107R77DS112M4 MDF107R77DS112M4 MDFF107R77DS112M4
4.9	7190	291	51100	1.05	
5.6	6310	255	53300	1.20	
4.2	9060	170.83	90000	1.30	MDFA127D132ML8 MDFAF127D132ML8 MDF127D132ML8 MDFF127D132ML8
4.7	8150	153.67	90000	1.45	
5.7	6650	125.37	90000	1.80	
5.6	6840	254.40	52000	1.10	MDFA107DS112M4 MDFAF107DS112M4 MDF107DS112M4 MDFF107DS112M4
6.6	5790	215.37	54500	1.35	
7.1	5360	199.31	55500	1.45	
7.9	4810	178.64	56700	1.60	
8.8	4340	161.28	57700	1.75	
9.7	3940	146.49	58500	1.95	
11	3500	129.97	59400	2.2	
12	3170	117.94	60100	2.4	
14	2730	101.38	60900	2.8	
8.1	4700	174.87	26600	0.90	MDFA97DS112M4 MDFAF97DS112M4 MDF97DS112M4 MDFF97DS112M4
9.1	4200	156.30	30200	1.00	
10	3780	140.71	31400	1.15	
11	3430	127.42	32300	1.25	

n_a [1/min]	M_a [Nm]	i	F_{Ra} [N]	f_B	typ motoreduktora *gearmotor type*
4.0kW					
13	3040	112.99	33200	1.40	MDFA97DS112M4 MDFAF97DS112M4 MDF97DS112M4 MDFF97DS112M4
14	2750	102.16	33900	1.55	
15	2620	97.58	34100	1.65	
16	2420	89.85	34600	1.80	
18	2160	80.31	35100	2.0	
20	1940	72.29	35500	2.2	
22	1760	65.47	35800	2.4	
13	2950	109.49	21700	1.00	MDFA87DS112M4 MDFAF87DS112M4 MDF87DS112M4 MDFF87DS112M4
15	2630	97.89	24300	1.15	
16	2370	88.01	24600	1.25	
19	2050	76.39	24200	1.45	MDFA87DS112M4 MDFAF87DS112M4 MDF87DS112M4 MDFF87DS112M4
21	1840	68.40	23900	1.65	
25	1530	56.75	23200	1.95	
28	1350	50.36	22800	2.2	
31	1220	45.28	22300	2.3	
21	1790	66.46	13400	0.85	MDFA77DS112M4 MDFAF77DS112M4 MDF77DS112M4 MDFF77DS112M4
24	1570	58.32	15200	0.95	
26	1490	55.27	15800	1.00	
29	1300	48.37	16900	1.15	
33	1170	43.58	17600	1.30	MDFA77DS112M4 MDFAF77DS112M4 MDF77DS112M4 MDFF77DS112M4
37	1030	38.23	18200	1.45	
42	910	33.74	18600	1.65	
47	800	29.91	19000	1.85	
56	685	25.54	19300	2.1	
45	850	31.51	18800	1.65	MDFA77DS112M4 MDFAF77DS112M4 MDF77DS112M4 MDFF77DS112M4
49	775	28.75	19100	1.85	
56	685	25.50	19300	2.2	
66	575	21.43	19500	2.6	
72	530	19.70	19600	2.8	
52	735	27.41	11000	1.10	MDFA67DS112M4 MDFAF67DS112M4 MDF67DS112M4 MDFF67DS112M4
57	675	25.13	11400	1.20	
64	595	22.05	11900	1.40	
68	560	20.90	12100	1.45	
78	490	18.29	12400	1.65	
86	445	16.48	12700	1.85	
98	390	14.46	12900	2.1	
111	345	12.76	13000	2.4	
126	305	11.31	13000	2.7	
147	260	9.66	13000	3.2	
156	245	9.08	13000	2.2	
165	230	8.60	12800	2.5	
189	205	7.53	12400	3.0	
209	183	6.78	12100	3.4	
239	160	5.95	11700	3.8	
270	141	5.25	11400	4.2	
305	125	4.66	11000	4.5	
357	107	3.97	10600	4.7	
67	570	21.17	6490	1.05	MDFA57DS112M4 MDFAF57DS112M4 MDF57DS112M4 MDFF57DS112M4
74	515	19.11	6490	1.15	
84	450	16.81	6450	1.35	
89	425	15.88	6430	1.40	
105	365	13.52	6340	1.65	

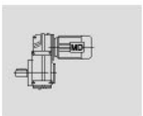

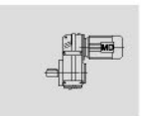

n_a [1/min]	M_a [Nm]	i	F_{Ra} [N]	f_B	typ motoreduktora *gearmotor type*
4.0kW					
116	330	12.29	6270	1.80	MDFA57DS112M4 MDFAF57DS112M4 MDF57DS112M4 MDFF57DS112M4
133	285	10.64	6150	2.1	
153	250	9.31	5850	1.70	
173	220	8.19	5730	1.90	
184	210	7.73	5680	2.0	
216	177	6.58	5510	2.4	
237	161	5.98	5410	2.6	
274	139	5.18	5250	3.0	
5.5kW					
1.4	37517	1004	190000	1.33	MDFH177R97DS132S4 MDF177R97DS132S4
1.7	30897	876	190000	1.62	
2.0	26260	740	190000	1.9	
2.8	18759	522	190000	2.67	
1.0	52525	1446	190000	0.95	MDFH177R97DS132S4 MDF177R97DS132S4
1.2	43771	1258	190000	1.14	
1.4	37518	1032	190000	1.33	
1.6	32828	888	190000	1.52	
1.9	27644	773	190000	1.81	
2.2	23875	656	190000	2.09	
2.4	21885	604	190000	2.28	
1.5	30696	937	150000	1.04	MDFA167R97DS132S4 MDFAF167R97DS132S4 MDF167R97DS132S4 MDFF167R97DS132S4
1.7	27602	841	150000	1.16	
2.0	23062	703	150000	1.39	
2.3	20446	623	150000	1.57	
2.7	17539	534	150000	1.82	
3.1	15416	470	150000	2.08	
3.5	13442	409	150000	2.38	
2.5	19300	576	96300	0.95	MDFA157R97DS132S4 MDFAF157R97DS132S4 MDF157R97DS132S4 MDFF157R97DS132S4
2.8	16800	503	103600	1.05	
3.2	15000	446	108200	1.20	
4.1	11800	353	114500	1.55	
4.7	10100	302	117100	1.80	
5.2	9160	273	118400	1.95	
6.2	7750	232	120000	2.3	
7.1	6750	202	120000	2.7	
7.3	6570	197	120000	2.7	
3.4	14000	418	86500	0.85	MDFA127R87DS132S4 MDFAF127R87DS132S4 MDF127R87DS132S4 MDFF127R87DS132S4
3.8	12600	374	89400	0.95	
4.6	10500	312	90000	1.15	
4.9	9840	293	90000	1.20	
5.5	8680	259	90000	1.40	
6.4	7500	223	90000	1.60	
3.3	14500	428	85600	0.85	MDFA127R77DS132S4 MDFAF127R77DS132S4 MDF127R77DS132S4 MDFF127R77DS132S4
3.8	12700	376	89100	0.95	
2.7	19800	267.43	94600	0.90	MDFA157D160M8 MDFAF157D160M8 MDF157D160M8 MDFF157D160M8
3.3	16100	217.62	105500	1.10	
4.0	13200	178.20	111900	1.35	

n_a [1/min]	M_a [Nm]	i	F_{Ra} [N]	f_B	typ motoreduktora *gearmotor type*
5.5kW					
4.4	12100	162.96	114000	1.50	MDFA157D160M8 MDFAF157D160M8 MDF157D160M8 MDFF157D160M8
5.0	10500	141.80	116600	1.70	
5.7	9260	125.14	118300	1.95	
6.5	8030	108.49	119700	2.2	
7.4	7140	96.53	120000	2.5	
8.3	6350	85.80	120000	2.8	
9.1	5800	78.46	120000	3.1	
10	5050	68.28	120000	3.6	
4.2	12600	170.83	89200	0.95	MDFA127D160M8 MDFAF127D160M8 MDF127D160M8 MDFF127D160M8
4.6	11400	153.67	90000	1.05	
5.7	9270	125.37	90000	1.30	
6.2	8460	114.34	90000	1.40	
6.6	7910	215.37	49200	0.95	MDFA107DS132S4 MDFAF107DS132S4 MDF107DS132S4 MDFF107DS132S4
7.2	7320	199.31	50800	1.05	
8.0	6560	178.64	52700	1.15	
8.9	5920	161.28	54200	1.30	
9.8	5380	146.49	55500	1.45	MDFA107DS132S4 MDFAF107DS132S4 MDF107DS132S4 MDFF107DS132S4
11	4770	129.97	56800	1.60	
12	4330	117.94	57700	1.75	
14	3720	101.38	59000	2.1	
15	3400	92.47	59600	2.3	
16	3250	88.49	59900	2.4	
17	3080	83.99	60200	2.5	
11	4680	127.42	27400	0.90	MDFA97DS132S4 MDFAF97DS132S4 MDF97DS132S4 MDFF97DS132S4
13	4150	112.99	30300	1.05	
14	3750	102.16	31400	1.15	
15	3580	97.58	31900	1.20	MDFA97DS132S4 MDFAF97DS132S4 MDF97DS132S4 MDFF97DS132S4
16	3300	89.85	32600	1.30	
17	3180	86.59	32900	1.35	
18	2950	80.31	33400	1.45	
19	2780	75.63	33800	1.55	
20	2660	72.29	34100	1.60	
22	2400	65.47	34600	1.80	
25	2130	58.06	34500	2.0	
27	1930	52.49	33900	2.2	
16	3230	88.01	5760	0.95	MDFA87DS132S4 MDFAF87DS132S4 MDF87DS132S4 MDFF87DS132S4
19	2810	76.39	21200	1.05	
21	2510	68.40	21200	1.20	
25	2080	56.75	21000	1.45	
28	1850	50.36	20800	1.60	MDFA87DS132S4 MDFAF87DS132S4 MDF87DS132S4 MDFF87DS132S4
32	1660	45.28	20500	1.70	
36	1440	39.30	20100	1.90	
41	1290	35.19	19800	2.0	
49	1070	29.20	19100	2.3	
42	1250	33.92	19700	2.1	MDFA87DS132S4 MDFAF87DS132S4 MDF87DS132S4 MDFF87DS132S4
50	1060	28.78	19100	2.3	
54	970	26.50	18800	3.1	
60	870	23.68	18400	3.5	
30	1780	48.37	13500	0.85	MDFA77DS132S4 MDFAF77DS132S4 MDF77DS132S4 MDFF77DS132S4
33	1600	43.58	15000	0.95	
37	1400	38.23	16300	1.05	
42	1240	33.74	17300	1.20	

n_a [1/min]	M_a [Nm]	i	F_{Ra} [N]	f_B	typ motoreduktora *gearmotor type*
5.5kW					
48	1100	29.91	17900	1.35	MDFA77DS132S4 MDFAF77DS132S4 MDF77DS132S4 MDFF77DS132S4
56	940	25.54	18500	1.55	
56	940	25.50	18500	1.60	MDFA77DS132S4 MDFAF77DS132S4 MDF77DS132S4 MDFF77DS132S4
67	785	21.43	19000	1.90	
73	725	19.70	19200	2.1	
82	645	17.49	19400	2.3	
91	575	15.64	19600	2.6	
102	515	14.06	19300	2.9	
117	450	12.20	18600	3.3	
65	810	22.05	10400	1.00	MDFA67DS132S4 MDFAF67DS132S4 MDF67DS132S4 MDFF67DS132S4
68	770	20.90	10800	1.05	
78	670	18.29	11500	1.20	
87	605	16.48	11900	1.35	
99	530	14.46	12300	1.55	
112	470	12.76	12500	1.75	
126	415	11.31	12800	1.95	
148	355	9.66	12900	2.3	
158	335	9.08	12400	1.60	
166	315	8.60	12300	1.80	
190	275	7.53	12000	2.2	
211	250	6.78	11700	2.5	
240	220	5.95	11400	2.8	
272	193	5.25	11100	3.1	
307	171	4.66	10700	3.3	
360	146	3.97	10300	3.4	
85	620	16.81	5450	0.95	MDFA57DS132S4 MDFAF57DS132S4 MDF57DS132S4 MDFF57DS132S4
90	585	15.88	5480	1.05	
106	495	13.52	5530	1.20	
116	450	12.29	5530	1.35	
134	390	10.64	5510	1.55	
175	300	8.19	5190	1.40	
185	285	7.73	5160	1.50	
217	240	6.58	5070	1.75	
239	220	5.98	5010	1.90	
276	190	5.18	4900	2.2	
7.5kW					
1.4	51160	1004	190000	0.98	MDFH177R107DS132M4 MDF177R107DS132M4
1.7	42130	876	190000	1.19	
2.0	35810	740	190000	1.40	
2.8	25580	522	190000	1.95	
3.2	22380	455	190000	2.23	
1.4	51160	1032	190000	0.98	MDFH177R97DS132M4 MDF177R97DS132M4
1.6	44760	888	190000	1.12	
1.9	37700	773	190000	1.33	
2.2	32550	656	190000	1.54	
2.4	29844	604	190000	1.68	
2.7	26520	540	190000	1.89	
3.0	23875	486	190000	2.09	
3.9	16836	368	150000	1.90	MDFA167R107DS132M4 MDFAF167R107DS132M4 MDF167R107DS132M4 MDFF167R107DS132M4
4.1	16010	350	150000	2.00	
4.6	14350	314	150000	2.23	

n_a [1/min]	M_a [Nm]	i	F_{Ra} [N]	f_B	typ motoreduktora *gearmotor type*
7.5kW					
2.0	31448	703	150000	1.02	MDFA167R97DS132M4 MDFAF167R97DS132M4 MDF167R97DS132M4 MDFF167R97DS132M4
2.3	27882	623	150000	1.15	
2.7	23917	534	150000	1.34	
3.1	21022	470	150000	1.52	
3.5	18330	409	150000	1.75	
4.6	14300	312	85900	0.85	MDFA127R87DS132M4 MDFAF127R87DS132M4 MDF127R87DS132M4 MDFF127R87DS132M4
4.9	13500	293	87600	0.90	
5.5	11900	259	90000	1.00	
6.4	10300	223	90000	1.15	
7.2	9080	198	90000	1.30	
3.3	21600	217.62	87600	0.85	MDFA157D160L8 MDFAF157D160L8 MDF157D160L8 MDFF157D160L8
4.0	17700	178.20	101100	1.00	
4.4	16200	162.96	105200	1.10	
5.1	14100	141.80	110100	1.30	
5.8	12400	125.14	113300	1.45	
6.6	10800	108.49	116100	1.65	
7.5	9600	96.53	117800	1.85	
8.4	8530	85.80	119200	2.1	
9.2	7810	78.46	120000	2.3	
11	6790	68.28	120000	2.7	
12	5990	60.25	120000	3.0	
14	5200	52.24	120000	3.5	
15	4620	46.48	120000	3.9	
18	3980	40.06	120000	4.5	
3.6	20000	267.43	94000	0.90	MDFA157DS160M6 MDFAF157DS160M6 MDF157DS160M6 MDFF157DS160M6
4.4	16200	217.62	105100	1.10	
5.4	13300	178.20	111700	1.35	
5.9	12200	162.96	113800	1.50	
6.8	10600	141.80	116400	1.70	
7.7	9340	125.14	118200	1.95	
8.9	8090	108.49	119700	2.2	
9.9	7200	96.53	120000	2.5	
11	6400	85.80	120000	2.8	
12	5850	78.46	120000	3.1	
14	5090	68.28	120000	3.5	
16	4500	60.25	120000	4.0	
18	3900	52.24	119300	4.6	
5.7	12500	125.37	89500	0.95	MDFA127D160L8 MDFAF127D160L8 MDF127D160L8 MDFF127D160L8
6.3	11400	114.34	90000	1.05	
7.3	9840	98.95	90000	1.20	
8.2	8690	87.31	90000	1.40	
5.6	12700	170.83	89000	0.90	MDFA127DS160M6 MDFAF127DS160M6 MDF127DS160M6 MDFF127DS160M6
6.2	11500	153.67	90000	1.05	
7.7	9350	125.37	90000	1.30	
8.4	8530	114.34	90000	1.40	
8.4	8560	170.83	90000	1.40	MDFA127DS132M4 MDFAF127DS132M4 MDF127DS132M4 MDFF127DS132M4
9.3	7700	153.67	90000	1.55	
11	6280	125.37	90000	1.90	
8.0	8950	178.64	46300	0.85	MDFA107DS132M4 MDFAF107DS132M4 MDF107DS132M4 MDFF107DS132M4
8.9	8080	161.28	48700	0.95	
9.8	7340	146.49	50700	1.05	
11	6510	129.97	52800	1.20	

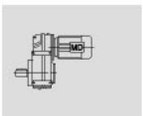

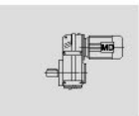

n_a [1/min]	M_a [Nm]	i	F_{Ra} [N]	f_B	typ motoreduktora *gearmotor type*
7.5kW					
12	5910	117.94	54200	1.30	
14	5080	101.38	56100	1.50	
15	4630	92.47	57100	1.65	MDFA107DS132M4 MDFAF107DS132M4 MDF107DS132M4 MDFF107DS132M4
16	4430	88.49	57500	1.75	
17	4210	83.99	58000	1.85	
19	3730	74.52	59000	2.1	
21	3390	67.62	59600	2.3	
15	4890	97.58	19300	0.90	
16	4500	89.85	29300	0.95	MDFA97DS132M4 MDFAF97DS132M4 MDF97DS132M4 MDFF97DS132M4
17	4340	86.59	29800	1.00	
18	4020	80.31	30700	1.05	
19	3790	75.63	31300	1.15	
20	3620	72.29	31800	1.20	
22	3280	65.47	32200	1.30	
25	2910	58.06	31800	1.50	MDFA97DS132M4 MDFAF97DS132M4 MDF97DS132M4 MDFF97DS132M4
27	2630	52.49	31400	1.65	
32	2230	44.49	30600	1.95	
37	1950	38.86	29900	2.2	
44	1630	52.50	28900	2.6	
33	2170	43.28	30500	1.40	MDFA97DS132M4 MDFAF97DS132M4 MDF97DS132M4 MDFF97DS132M4
39	1840	36.64	29600	1.65	
42	1700	33.91	29200	2.5	
47	1520	30.39	28500	2.8	
25	2840	56.75	18100	1.05	
28	2520	50.36	18200	1.15	MDFA87DS132M4 MDFAF87DS132M4 MDF87DS132M4 MDFF87DS132M4
32	2270	45.28	18200	1.25	
36	1970	39.30	18100	1.40	
41	1760	35.19	18000	1.50	
49	1460	29.20	17600	1.70	
50	1440	28.78	17600	1.70	
54	1330	26.50	17400	2.3	
60	1190	23.68	17100	2.5	MDFA87DS132M4 MDFAF87DS132M4 MDF87DS132M4 MDFF87DS132M4
67	1070	21.32	16800	2.8	
74	970	19.31	16500	3.1	
84	860	17.12	16200	3.5	
92	775	15.48	15900	3.9	
42	1690	33.74	14300	0.90	MDFA77DS132M4 MDFAF77DS132M4 MDF77DS132M4 MDFF77DS132M4
48	1500	29.91	15700	1.00	
56	1280	25.54	17000	1.15	
56	1280	25.50	17100	1.15	
67	1070	21.43	18000	1.40	
73	990	19.70	18400	1.50	
82	880	17.49	18800	1.70	
91	785	15.64	19000	1.90	
102	705	14.06	18600	2.1	MDFA77DS132M4 MDFAF77DS132M4 MDF77DS132M4 MDFF77DS132M4
117	610	12.20	18000	2.5	
131	545	10.93	17600	2.7	
154	465	9.30	16500	2.3	
173	415	8.26	16100	2.6	
194	370	7.39	15700	2.9	
215	335	6.64	15300	3.2	
248	290	5.76	14800	3.7	
277	260	5.16	14500	4.2	
334	215	4.28	13800	4.7	

n_a [1/min]	M_a [Nm]	i	F_{Ra} [N]	f_B	typ motoreduktora *gearmotor type*
9.2kW					
1.7	51680	876	190000	0.97	
2.0	43930	740	190000	1.14	MDFH177R107DS160S4 MDF177R107DS160S4
2.8	31380	522	190000	1.59	
3.2	27460	455	190000	1.82	
3.4	25840	427	190000	1.93	
4.9	17930	295	190000	2.79	
1.6	54910	888	190000	0.91	
1.9	46240	773	190000	1.08	
2.2	39940	656	190000	1.25	MDFH177R97DS160S4 MDF177R97DS160S4
2.4	36610	604	190000	1.36	
2.7	32540	540	190000	1.54	
3.0	29288	486	190000	1.71	
3.3	26624	440	190000	1.88	
3.7	23746	390	190000	2.11	
4.0	20369	368	150000	1.57	MDFA167R107DS160S4 MDFAF167R107DS160S4 MDF167R107DS160S4 MDFF167R107DS160S4
4.2	19369	350	150000	1.65	
4.7	17361	314	150000	1.84	
5.2	15674	283	150000	2.04	
2.7	28936	534	150000	1.11	MDFA167R97DS160S4 MDFAF167R97DS160S4 MDF167R97DS160S4 MDFF167R97DS160S4
3.1	25434	470	150000	1.26	
3.6	22177	409	150000	1.44	
4.1	19700	353	94800	0.90	
4.8	16900	302	103300	1.05	MDFA157R97DS160S4 MDFAF157R97DS160S4 MDF157R97DS160S4 MDFF157R97DS160S4
5.3	15300	273	107400	1.20	
6.2	13000	232	112400	1.40	
7.1	11300	202	115300	1.60	
7.3	11000	197	115800	1.65	
5.6	14500	259	85600	0.85	MDFA127R87DS160S4 MDFAF127R87DS160S4 MDF127R87DS160S4 MDFF127R87DS160S4
6.4	12500	223	89400	0.95	
7.3	11100	198	90000	1.10	
8.4	10400	170.83	90000	1.15	
9.4	9380	153.67	90000	1.30	MDFA127DS160S4 MDFAF127DS160S4 MDF127DS160S4 MDFF127DS160S4
11	7650	125.37	90000	1.55	
13	6980	114.34	90000	1.70	
15	6040	98.95	90000	2.0	
9.8	8940	146.49	46300	0.85	MDFA107DS160S4 MDFAF107DS160S4 MDF107DS160S4 MDFF107DS160S4
11	7930	129.97	49100	0.95	
12	7200	117.94	51100	1.05	
14	6180	101.38	53600	1.25	
16	5640	92.47	54900	1.35	
17	5120	83.99	56000	1.50	MDFA107DS160S4 MDFAF107DS160S4 MDF107DS160S4 MDFF107DS160S4
19	4550	74.52	57300	1.70	
21	4130	67.62	58200	1.85	
25	3550	58.12	58300	2.2	
28	3100	50.73	56800	2.5	

n_a [1/min]	M_a [Nm]	i	F_{Ra} [N]	f_B	typ motoreduktora *gearmotor type*
9.2kW					
18	4900	80.31	18700	0.90	MDFA97DS160S4 MDFAF97DS160S4 MDF97DS160S4 MDFF97DS160S4
19	4610	75.63	28900	0.95	
20	4410	72.29	29600	0.95	
22	3990	65.47	29600	1.10	
25	3540	58.06	29500	1.20	
27	3200	52.49	29300	1.35	MDFA97DS160S4 MDFAF97DS160S4 MDF97DS160S4 MDFF97DS160S4
32	2710	44.49	28800	1.60	
37	2370	38.86	28400	1.80	
44	1980	32.50	27600	2.2	
42	2070	33.91	27800	2.1	MDFA97DS160S4 MDFAF97DS160S4 MDF97DS160S4 MDFF97DS160S4
47	1850	30.39	27300	2.3	
52	1670	27.44	26800	2.6	
58	1520	24.92	26300	2.8	
29	3070	50.36	16000	0.95	MDFA87DS160S4 MDFAF87DS160S4 MDF87DS160S4 MDFF87DS160S4
32	2760	45.28	16200	1.00	
37	2400	39.30	16400	1.15	
41	2150	35.19	16400	1.20	
49	1780	29.20	16300	1.40	
54	1620	26.50	16200	1.85	MDFA87DS160S4 MDFAF87DS160S4 MDF87DS160S4 MDFF87DS160S4
61	1440	23.68	16100	2.1	
68	1300	21.32	15900	2.3	
75	1180	19.31	15700	2.5	
84	1040	17.12	15400	2.9	
93	940	15.48	15200	3.2	
110	800	13.12	14700	3.8	
73	1200	19.70	17400	1.25	MDFA77DS160S4 MDFAF77DS160S4 MDF77DS160S4 MDFF77DS160S4
82	1070	17.49	18000	1.40	
92	950	15.64	18300	1.55	
102	860	14.06	18000	1.75	MDFA77DS160S4 MDFAF77DS160S4 MDF77DS160S4 MDFF77DS160S4
118	745	12.20	17500	2.0	
132	665	10.93	17100	2.2	
155	570	9.30	16000	1.90	
174	505	8.26	15600	2.1	
195	450	7.39	15300	2.4	
217	405	6.64	15000	2.7	
250	350	5.76	14500	3.1	
279	315	5.16	14200	3.4	
336	260	4.28	13600	3.9	
11.0kW					
2.0	52525	740	190000	0.95	MDFH177R107DS160M4 MDF177R107DS160M4
2.8	37518	522	190000	1.33	
3.2	32828	455	190000	1.52	
3.4	30897	427	190000	1.62	
4.9	21439	295	190000	2.33	
1.9	55289	773	190000	0.90	
2.2	47750	656	190000	1.05	MDFH177R97DS160M4 MDF177R97DS160M4
2.4	43771	604	190000	1.14	
2.7	38907	540	190000	1.29	
3.0	35017	486	190000	1.43	
3.3	31833	440	190000	1.57	
3.7	28392	390	190000	1.76	
4.2	25012	344	190000	2.00	

n_a [1/min]	M_a [Nm]	i	F_{Ra} [N]	f_B	typ motoreduktora *gearmotor type*
11.0kW					
4.0	24344	368	150000	1.31	MDFA167R107DS160M4 MDFAF167R107DS160M4 MDF167R107DS160M4 MDFF167R107DS160M4
4.2	23176	350	150000	1.38	
4.7	20758	314	150000	1.54	
5.2	18741	283	150000	1.71	
5.7	17025	257	150000	1.88	
6.4	15106	228	150000	2.12	
7.1	13706	207	150000	2.33	
3.1	30410	470	150000	1.05	MDFA167R97DS160M4 MDFAF167R97DS160M4 MDF167R97DS160M4 MDFF167R97DS160M4
3.6	26516	409	150000	1.21	
4.8	20300	302	92800	0.90	MDFA157R97DS160M4 MDFAF157R97DS160M4 MDF157R97DS160M4 MDFF157R97DS160M4
5.3	18300	273	99300	1.00	
6.2	15500	232	106900	1.15	
7.1	13500	202	111200	1.35	
7.3	13200	197	112000	1.35	
6.4	15000	223	84500	0.80	MDFA127R87DS160M4 MDFAF127R87DS160M4 MDF127R87DS160M4 MDFF127R87DS160M4
7.3	13300	298	88000	0.90	
8.7	11100	166	90000	1.10	
5.1	20700	141.80	91300	0.85	MDFA157D180L8 MDFAF157D180L8 MDF157D180L8 MDFF157D180L8
5.8	18300	125.14	99500	1.00	
6.6	15800	108.49	106100	1.15	
7.5	14100	96.53	110100	1.30	
5.4	19500	178.20	95500	0.90	MDFA157DS180M6 MDFAF157DS180M6 MDF157DS180M6 MDFF157DS180M6
5.9	17800	162.96	100800	1.00	
6.8	15500	141.80	106900	1.15	
7.7	13700	125.14	110900	1.30	
8.9	11900	108.49	114300	1.50	
9.9	10600	96.53	116400	1.70	
11	9390	85.80	118100	1.90	
12	8590	78.46	119100	2.1	
5.4	19500	267.43	95500	0.90	MDFA157DS160M4 MDFAF157DS160M4 MDF157DS160M4 MDFF157DS160M4
6.6	15900	217.62	106000	1.15	
8.1	13000	178.20	112300	1.40	
8.8	11900	162.96	114300	1.50	
10	10300	141.80	116800	1.75	
12	9130	125.14	118400	1.95	
13	7910	108.49	119900	2.3	
15	7040	96.53	120000	2.6	
17	6260	85.80	118100	2.9	
18	5720	78.46	115700	3.1	
21	4980	68.28	112000	3.6	
7.7	13700	125.37	87100	0.85	MDFA127DS180M6 MDFAF127DS180M6 MDF127DS180M6 MDFF127DS180M6
8.4	12500	114.34	89500	0.95	
9.7	10800	98.95	90000	1.10	
11	9550	87.31	90000	1.25	
13	8250	75.41	90000	1.45	
8.4	12500	170.83	89500	0.95	MDFA127DS160M4 MDFAF127DS160M4 MDF127DS160M4 MDFF127DS160M4
9.4	11200	153.67	90000	1.05	
11	9150	125.37	90000	1.30	

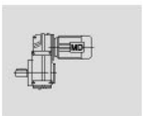

n_a [1/min]	M_a [Nm]	i	F_{Ra} [N]	f_B	typ motoreduktora *gearmotor type*
11.0kW					
13	8340	114.34	90000	1.45	MDFA127DS160M4
15	7220	98.95	90000	1.65	MDFAF127DS160M4
16	6370	87.31	90000	1.90	MDF127DS160M4
19	5500	75.41	88600	2.2	MDFF127DS160M4
12	8600	117.94	47300	0.90	MDFA107DS160M4
14	7400	101.38	50600	1.05	MDFAF107DS160M4
16	6750	92.47	52200	1.15	MDF107DS160M4
					MDFF107DS160M4
17	6130	83.99	53700	1.25	
19	5440	74.52	55300	1.40	MDFA107DS160M4
21	4930	67.62	56500	1.55	MDFAF107DS160M4
25	4240	58.12	56400	1.80	MDF107DS160M4
28	3700	50.73	55100	2.1	MDFF107DS160M4
33	3140	43.03	53500	2.5	
43	2470	33.79	51000	3.0	MDFA107DS160M4
52	2010	27.57	48800	3.9	MDFAF107DS160M4
57	1830	25.14	47800	4.3	MDF107DS160M4
					MDFF107DS160M4
22	4780	65.47	24000	0.90	MDFA97DS160M4
25	4240	58.06	27100	1.00	MDFAF97DS160M4
27	3830	52.49	27100	1.10	MDF97DS160M4
					MDFF97DS160M4
32	3250	44.49	27000	1.30	
37	2830	38.86	26700	1.50	
44	2370	32.50	26200	1.80	MDFA97DS160M4
42	2470	33.91	26400	1.75	MDFAF97DS160M4
47	2220	30.39	26000	1.95	MDF97DS160M4
52	2000	27.44	25600	2.2	MDFF97DS160M4
58	1820	24.92	25200	2.4	
65	1610	22.11	24700	2.7	
37	2870	39.30	14600	0.95	MDFA87DS160M4
41	2570	35.19	14800	1.00	MDFAF87DS160M4
49	2130	29.20	15000	1.20	MDF87DS160M4
					MDFF87DS160M4
54	1930	26.50	15000	1.55	
61	1730	23.68	15000	1.75	
68	1560	21.32	14900	1.95	MDFA87DS160M4
75	1410	19.31	14800	2.1	MDFAF87DS160M4
84	1250	17.12	14600	2.4	MDF87DS160M4
93	1130	15.48	14400	2.7	MDFF87DS160M4
110	960	13.12	14100	3.1	
73	1440	19.70	16100	1.05	
82	1280	17.49	17100	1.20	
92	1140	15.64	17600	1.30	
102	1030	14.06	17400	1.45	
118	890	12.20	17000	1.70	
132	795	10.93	16700	1.90	MDFA77DS160M4
155	680	9.30	15500	1.60	MDFAF77DS160M4
174	605	8.26	15200	1.80	MDF77DS160M4
195	540	7.39	14900	2.0	MDFF77DS160M4
217	485	6.64	14600	2.2	
250	420	5.76	14200	2.6	
279	375	5.16	13900	2.9	
336	310	4.28	13300	3.2	

n_a [1/min]	M_a [Nm]	i	F_{Ra} [N]	f_B	typ motoreduktora *gearmotor type*
15.0kW					
2.8	51161	522	190000	0.98	
3.2	44766	455	190000	1.12	
3.4	42132	427	190000	1.19	MDFH177R107DS180S4
4.9	29235	295	190000	1.71	MDF177R107DS180S4
5.5	26045	262	190000	1.92	
6.5	22038	222	190000	2.27	
2.7	53056	540	190000	0.94	
3.0	47750	486	190000	1.05	
3.3	43409	440	190000	1.15	
3.7	38716	390	190000	1.29	MDFH177R97DS180S4
4.2	34107	344	190000	1.47	MDF177R97DS180S4
4.8	29844	305	190000	1.68	
6.5	22038	224	190000	2.27	
4.7	28306	314	150000	1.13	
5.2	25556	283	150000	1.25	
5.7	23216	257	150000	1.38	MDFA167R107DS180S4
6.4	20599	228	150000	1.55	MDFAF167R107DS180S4
7.1	18690	207	150000	1.71	MDF167R107DS180S4
8.2	16062	178	150000	1.99	MDFF167R107DS180S4
8.0	16853	182.73	150000	1.90	MDF167DS180S4
9.7	13825	149.94	150000	2.31	
6.3	20900	232	90400	0.85	MDFA157R97DS180S4
7.2	18300	202	99500	1.00	MDFAF157R97DS180S4
7.4	17700	197	101000	1.00	MDF157R97DS180S4
					MDFF157R97DS180S4
6.8	20900	141.80	90400	0.85	
7.8	18500	125.14	98800	0.95	MDFA157DS180L6
8.9	16000	108.49	105700	1.10	MDFAF157DS180L6
10	14300	96.53	109800	1.25	MDF157DS180L6
11	12700	85.80	112900	1.40	MDFF157DS180L6
6.7	21400	217.62	88800	0.85	
8.2	17500	178.20	101800	1.05	
9.0	16000	162.96	105700	1.15	
10	13900	141.80	110500	1.30	
12	12300	125.14	113600	1.45	MDFA157DS180S4
13	10600	108.49	116300	1.70	MDFAF157DS180S4
15	9470	96.53	115800	1.90	MDF157DS180S4
17	8420	85.80	113200	2.1	MDFF157DS180S4
19	7700	78.46	111200	2.3	
21	6700	68.28	108000	2.7	
24	5910	60.25	105100	3.0	

n_a [1/min]	M_a [Nm]	i	F_{Ra} [N]	f_B	typ motoreduktora *gearmotor type*
15.0kW					
9.8	14600	98.95	85300	0.80	MDFA127DS180L6 MDFAF127DS180L6 MDF127DS180L6 MDFF127DS180L6
11	12900	87.31	88700	0.95	
13	11100	75.41	88300	1.10	
14	10300	70.07	87600	1.15	
15	9440	63.91	86700	1.25	
12	12300	125.37	89000	1.00	MDFA127DS180S4 MDFAF127DS180S4 MDF127DS180S4 MDFF127DS180S4
13	11200	114.34	88300	1.05	
15	9710	98.95	87000	1.25	
17	8570	87.31	85600	1.40	
19	7400	75.41	83800	1.60	
21	6870	70.07	82800	1.75	
16	9070	92.47	45900	0.85	MDFA107DS180S4 MDFAF107DS180S4 MDF107DS180S4 MDFF107DS180S4
17	8680	88.49	47100	0.90	
17	8240	83.99	48300	0.95	
20	7310	74.52	50800	1.05	
22	6630	67.62	52500	1.15	
25	5700	58.12	52200	1.35	MDFA107DS180S4 MDFAF107DS180S4 MDF107DS180S4 MDFF107DS180S4
29	4980	50.73	51500	1.55	
34	4220	43.03	50400	1.80	
39	3690	37.61	49300	2.1	
46	3120	31.80	48000	2.5	
43	3320	33.79	48500	2.2	MDFA107DS180S4 MDFAF107DS180S4 MDF107DS180S4 MDFF107DS180S4
53	2700	27.57	46700	2.9	
58	2470	25.14	45900	3.2	
67	2130	21.76	44500	3.7	
33	4360	44.49	22900	1.00	MDFA97DS180S4 MDFAF97DS180S4 MDF97DS180S4 MDFF97DS180S4
38	3810	38.86	23100	1.15	
45	3190	32.50	23200	1.35	
43	3330	33.91	23200	1.30	MDFA97DS180S4 MDFAF97DS180S4 MDF97DS180S4 MDFF97DS180S4
48	2980	30.39	23200	1.45	
53	2690	27.44	23100	1.60	
59	2450	24.92	22900	1.75	
66	2170	22.11	22600	2.0	
73	1970	20.07	22400	2.2	
85	1690	17.25	21900	2.5	
97	1480	15.06	21400	2.9	
114	1250	12.77	20800	3.4	
131	1100	11.16	20200	3.7	
55	2600	26.50	12300	1.15	MDFA87DS180S4 MDFAF87DS180S4 MDF87DS180S4 MDFF87DS180S4
62	2320	23.68	12600	1.30	
68	2090	21.32	12700	1.45	
76	1890	19.31	12800	1.60	
85	1680	17.12	12900	1.80	
94	1520	15.48	12800	2.0	
111	1290	13.12	12700	2.3	
127	1120	11.46	12600	2.7	
152	940	9.58	12300	3.1	
176	810	8.29	11700	1.90	
199	720	7.35	11500	2.1	
220	650	6.65	11300	2.3	
259	555	5.63	11000	2.8	
297	485	4.92	10700	3.2	
355	405	4.12	10300	3.6	

n_a [1/min]	M_a [Nm]	i	F_{Ra} [N]	f_B	typ motoreduktora *gearmotor type*
18.5kW					
3.2	55211	455	190000	0.91	MDFH177R107DS180M4 MDF177R107DS180M4
3.4	51963	427	190000	0.96	
4.9	36056	295	190000	1.39	
5.5	32123	262	190000	1.56	
6.5	27181	222	190000	1.84	
7.5	23557	194	190000	2.12	
3.3	53538	440	190000	0.93	MDFH177R97DS180M4 MDF177R97DS180M4
3.7	47750	390	190000	1.05	
4.2	42065	344	190000	1.19	
4.8	36807	305	190000	1.36	
6.5	27181	224	190000	1.84	
7.2	24538	202	190000	2.04	
5.2	31304	283	150000	1.02	MDFA167R107DS180M4 MDFAF167R107DS180M4 MDF167R107DS180M4 MDFF167R107DS180M4
5.7	28438	257	150000	1.13	
6.4	25232	228	150000	1.27	
7.1	22894	207	150000	1.40	
8.3	19675	178	150000	1.63	
6.7	26369	216.26	190000	1.90	MDFH177DS180M4 MDF177DS180M4
7.4	23875	195.39	190000	2.09	
8.3	21286	173.85	190000	2.35	
9.3	18997	155.93	190000	2.63	
9.8	16940	149.94	150000	1.89	MDFH167DS180M4 MDF167DS180M4
12.0	13783	122.00	150000	2.32	
7.2	22500	202	76400	0.80	MDFA157R97DS180M4 MDFAF157R97DS180M4 MDF157R97DS180M4 MDFF157R97DS180M4
7.5	21800	197	86800	0.80	
8.2	21500	178.20	88200	0.85	MDFA157DS180M4 MDFAF157DS180M4 MDF157DS180M4 MDFF157DS180M4
9.0	19700	162.96	95000	0.90	
10	17100	141.80	102800	1.05	
12	15100	125.14	107900	1.20	
14	13100	108.49	112100	1.40	
15	11600	96.53	111300	1.55	
17	10300	85.80	109300	1.75	
19	9460	78.46	107600	1.90	
21	8230	68.28	104900	2.2	
24	7270	60.25	102300	2.5	
28	6300	52.24	99300	2.9	

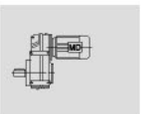

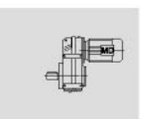

n_a [1/min]	M_a [Nm]	i	F_{Ra} [N]	f_B	typ motoreduktora *gearmotor type*
18.5kW					
13	13800	114.34	82200	0.85	MDFA127DS180M4 MDFAF127DS180M4 MDF127DS180M4 MDFF127DS180M4
15	11900	98.95	81700	1.00	
17	10500	87.31	80900	1.15	
19	9090	75.41	79700	1.30	
21	8450	70.07	79000	1.40	
23	7710	63.91	78100	1.55	
26	6670	55.31	76400	1.80	
30	5880	48.80	74900	2.0	
20	8990	74.52	46200	0.85	MDFA107DS180M4 MDFAF107DS180M4 MDF107DS180M4 MDFF107DS180M4
22	8150	67.62	48500	0.95	
25	7010	58.12	48700	1.10	
29	6120	50.73	48400	1.25	
34	5190	43.03	47700	1.50	MDFA107DS180M4 MDFAF107DS180M4 MDF107DS180M4 MDFF107DS180M4
39	4540	37.61	47000	1.70	
46	3830	31.80	46000	2.0	
43	4070	33.79	46400	1.80	MDFA107DS180M4 MDFAF107DS180M4 MDF107DS180M4 MDFF107DS180M4
53	3320	27.57	45000	2.4	
58	3030	25.14	44300	2.6	
67	2620	21.76	43200	3.0	
38	4690	38.86	20000	0.90	MDFA97DS180M4 MDFAF97DS180M4 MDF97DS180M4 MDFF97DS180M4
45	3920	32.50	20600	1.10	
53	3310	27.44	20900	1.30	
59	3010	24.92	20900	1.45	
66	2670	22.11	20900	1.60	
73	2420	20.07	20800	1.80	
85	2080	17.25	20500	2.1	
97	1820	15.06	20200	2.4	
115	1540	12.77	19800	2.8	
131	1350	11.16	19300	3.0	
69	2570	21.32	10900	1.15	MDFA87DS180M4 MDFAF87DS180M4 MDF87DS180M4 MDFF87DS180M4
76	2330	19.31	11100	1.30	
86	2060	17.12	11400	1.45	
95	1870	15.48	11500	1.60	
112	1580	13.12	11600	1.90	
128	1380	11.46	11600	2.2	
153	1160	9.58	11500	2.5	
177	1000	8.29	10900	1.55	
199	890	7.35	10800	1.75	
220	800	6.65	10700	1.90	
260	680	5.63	10400	2.2	
298	595	4.92	10200	2.6	
356	495	4.12	9900	2.9	
22kW					
6.7	31358	216.26	190000	1.59	MDFH177DS180L4 MDF177DS180L4
7.4	28392	195.39	190000	1.76	
8.3	25313	173.85	190000	1.98	
9.3	22591	155.93	190000	2.21	
11	19100	135.39	190000	2.62	
6.4	30014	228	150000	1.07	MDFA167R107DS180L4 MDFAF167R107DS180L4 MDF167R107DS180L4 MDFF167R107DS180L4
7.1	27225	207	150000	1.18	
8.3	23398	178	150000	1.37	

n_a [1/min]	M_a [Nm]	i	F_{Ra} [N]	f_B	typ motoreduktora *gearmotor type*
22kW					
9.8	20145	149.94	150000	1.59	MDFA167DS180L4 MDFAF167DS180L4 MDF167DS180L4 MDFF167DS180L4
12.0	16390	122.00	150000	1.95	
15.1	13112	97.60	147200	2.44	
10	20900	96.53	90500	0.85	MDFA157DS200L6 MDFAF157DS200L6 MDF157DS200L6 MDFF157DS200L6
11	18600	85.80	98500	0.95	
12	17000	78.46	103100	1.05	
14	14800	68.28	107700	1.20	
10	20300	141.80	92600	0.90	MDFA157DS180L4 MDFAF157DS180L4 MDF157DS180L4 MDFF157DS180L4
12	17900	125.14	100400	1.00	
14	15600	108.49	106800	1.15	
15	13800	96.53	106900	1.30	
17	12300	85.80	105400	1.45	
19	11300	78.46	104000	1.60	
21	9790	68.28	101700	1.85	
24	8640	60.25	99600	2.1	
28	7490	52.24	97000	2.4	
32	6660	46.48	94800	2.7	
37	5740	40.06	91900	3.1	
45	4670	32.55	87800	3.9	
15	14200	98.95	76400	0.85	MDFA127DS180L4 MDFAF127DS180L4 MDF127DS180L4 MDFF127DS180L4
17	12500	87.31	76300	0.95	
19	10800	75.41	75700	1.10	
21	10000	70.07	75300	1.20	
23	9160	63.91	74700	1.30	
26	7930	55.31	73500	1.50	
30	7000	48.80	72300	1.70	
35	6040	42.15	70700	2.0	
25	8330	58.12	45200	0.90	MDFA107DS180L4 MDFAF107DS180L4 MDF107DS180L4 MDFF107DS180L4
29	7280	50.76	45300	1.05	
34	6170	43.03	45100	1.25	
39	5390	37.61	44800	1.40	
46	4560	31.80	44100	1.70	
43	4850	33.79	44300	1.55	MDFA107DS180L4 MDFAF107DS180L4 MDF107DS180L4 MDFF107DS180L4
53	3950	27.57	43300	2.0	
58	3610	25.14	42800	2.2	
67	3120	21.76	41900	2.5	
76	2750	19.20	41000	2.8	
53	3940	27.44	18700	1.10	MDFA97DS180L4 MDFAF97DS180L4 MDF97DS180L4 MDFF97DS180L4
59	3570	24.92	18900	1.20	
66	3170	22.11	19100	1.35	
73	2880	20.07	19200	1.50	
85	2470	17.25	19100	1.75	
97	2160	15.06	19000	2.0	
115	1830	12.77	18700	2.3	
131	1600	11.16	18400	2.6	
69	3060	21.32	8990	1.00	MDFA87DS180L4 MDFAF87DS180L4 MDF87DS180L4 MDFF87DS180L4
76	2770	19.31	9430	1.10	
86	2460	17.12	9850	1.20	
95	2220	15.48	10100	1.35	
112	1880	13.12	10400	1.60	
128	1640	11.46	10600	1.85	

n_a [1/min]	M_a [Nm]	i	F_{Ra} [N]	f_B	typ motoreduktora *gearmotor type*
22kW					
153	1370	9.58	10600	2.1	MDFA87DS180L4 MDFAF87DS180L4 MDF87DS180L4 MDFF87DS180L4
177	1190	8.29	10100	1.30	
199	1050	7.35	10100	1.45	
220	950	6.65	10000	1.60	
260	810	5.63	9900	1.90	
298	705	4.92	9750	2.2	
356	590	4.12	9500	2.5	
30kW					
7.1	37125	207	150000	0.86	MDFA167R107DS200L4 MDFAF167R107DS200L4 MDF167R107DS200L4 MDFF167R107DS200L4
8.3	31906	178	150000	1.00	
6.7	42761	216.26	190000	1.17	MDFH177DS200L4 MDF177DS200L4
7.4	38716	195.39	190000	1.29	
8.3	34518	173.85	190000	1.45	
9.3	30806	155.93	190000	1.62	
11	26045	135.39	190000	1.92	
12	23875	122.84	190000	2.09	
14	20464	105.81	190000	2.44	
16	17906	88.93	190000	2.79	
12.0	22350	122.00	150000	1.43	MDFA167DS200L4 MDFAF167DS200L4 MDF167DS200L4 MDFF167DS200L4
15.1	17880	97.60	147200	1.79	
16.9	15901	86.80	140100	2.01	
19.4	13853	75.62	132000	2.31	
14	21100	108.49	89600	0.85	MDFA157DS200L4 MDFAF157DS200L4 MDF157DS200L4 MDFF157DS200L4
15	18800	96.53	96900	0.95	
17	16700	85.80	96400	1.10	
19	15300	78.46	95800	1.20	
22	13300	68.28	94600	1.35	
24	11700	60.25	93300	1.55	
28	10200	52.24	91500	1.75	
32	9060	46.48	89900	2.0	
37	7810	40.06	87700	2.3	
19	14700	75.41	66600	0.80	MDFA127DS200L4 MDFAF127DS200L4 MDF127DS200L4 MDFF127DS200L4
21	13700	70.07	66800	0.90	
23	12500	63.91	66900	0.95	
27	10800	55.31	66700	1.10	
30	9510	48.80	66300	1.25	
35	8210	42.15	65500	1.45	
39	7270	37.28	64700	1.65	
47	6110	31.33	63200	1.95	
58	4930	25.30	61200	2.4	
55	5240	26.86	61800	1.60	MDFA127DS200L4 MDFAF127DS200L4 MDF127DS200L4 MDFF127DS200L4
60	4790	24.57	60900	1.80	
69	4170	21.38	59400	2.9	
78	3680	18.87	58000	3.0	

n_a [1/min]	M_a [Nm]	i	F_{Ra} [N]	f_B	typ motoreduktora *gearmotor type*
30kW					
34	8390	43.03	39200	0.90	MDFA107DS200L4 MDFAF107DS200L4 MDF107DS200L4 MDFF107DS200L4
39	7330	37.61	39600	1.05	
46	6200	31.80	39700	1.25	
53	5370	27.57	39500	1.46	MDFA107DS200L4 MDFAF107DS200L4 MDF107DS200L4 MDFF107DS200L4
58	4900	25.14	39300	1.60	
68	4240	21.76	38800	1.85	
77	3740	19.20	38300	2.1	
89	3230	16.58	37600	2.4	
100	2860	14.67	36900	2.7	
119	2400	12.33	35900	2.9	
148	1940	9.96	34500	3.3	
66	4310	22.11	15100	1.00	MDFA97DS200L4 MDFAF97DS200L4 MDF97DS200L4 MDFF97DS200L4
73	3910	20.07	15500	1.10	
85	3360	17.25	16000	1.30	
98	2930	15.06	16300	1.45	
115	2490	12.77	16400	1.75	
132	2180	11.16	16400	1.90	
162	1770	9.06	15400	1.35	
179	1600	8.22	15300	1.45	
208	1380	7.07	15100	1.70	
238	1200	6.17	14900	1.85	
281	1020	5.23	14600	2.1	
321	890	4.57	14300	2.3	
37kW					
6.7	52739	216.26	190000	0.95	MDFH177DS225S4 MDF177DS225S4
7.4	47750	195.39	190000	1.05	
8.3	42572	173.85	190000	1.17	
9.3	37995	155.93	190000	1.32	
11	32123	135.39	190000	1.56	
12	29446	122.84	190000	1.70	
14	25239	105.81	190000	1.98	
16	22084	88.93	190000	2.26	
19	18597	77.00	190000	2.69	
12.1	27472	122.00	150000	1.16	MDFH167DS225S4 MDF167DS225S4
15.1	21977	97.60	147200	1.46	
17.0	19545	86.80	140100	1.64	
19.5	17028	75.62	132000	1.88	
21.9	15193	67.47	125600	2.11	
25.6	12950	57.51	117000	2.47	
31.0	10730	47.65	107400	2.98	
17	20600	85.80	88600	0.85	MDFA157DS225S4 MDFAF157DS225S4 MDF157DS225S4 MDFF157DS225S4
19	18900	78.46	88700	0.95	
22	16400	68.28	88400	1.10	
24	14500	60.25	87800	1.25	
28	12600	52.24	86800	1.45	
32	11200	46.48	85700	1.60	

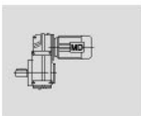

n_a [1/min]	M_a [Nm]	i	F_{Ra} [N]	f_B	typ motoreduktora *gearmotor type*
37kW					
37	9630	40.06	84000	1.85	MDFA157DS225S4 MDFAF157DS225S4 MDF157DS225S4 MDFF157DS225S4
45	7820	32.55	81400	2.3	
53	6630	27.60	79100	2.7	
27	13300	55.31	60900	0.90	MDFA127DS225S4 MDFAF127DS225S4 MDF127DS225S4 MDFF127DS225S4
30	11700	48.80	61100	1.00	
35	10100	42.15	61100	1.20	
39	8960	37.28	60700	1.35	
47	7530	31.33	59900	1.60	
58	6080	25.30	58500	1.95	
55	6460	26.86	58900	1.30	MDFA127DS225S4 MDFAF127DS225S4 MDF127DS225S4 MDFF127DS225S4
60	5910	24.57	58300	1.45	
69	5140	21.38	57100	2.3	
78	4530	18.87	56000	2.4	
90	3930	16.36	54600	2.8	
101	3500	14.55	53400	3.1	
117	3010	12.54	51900	3.3	
144	2450	10.19	49600	3.9	
166	2130	8.86	47700	3.3	
186	1890	7.88	46500	3.2	
53	6630	27.57	36200	1.20	MDFA107DS225S4 MDFAF107DS225S4 MDF107DS225S4 MDFF107DS225S4
58	6040	25.14	36200	1.30	
68	5230	21.76	36200	1.50	
77	4610	19.20	36000	1.70	
89	3990	16.58	35600	1.95	
100	3530	14.67	35100	2.2	
119	2960	12.33	34400	2.4	
148	2390	9.96	33300	2.7	
152	2330	9.69	32400	2.1	
176	2010	8.37	31700	2.4	
199	1780	7.40	31000	2.6	
236	1500	6.22	30000	3.1	
45kW					
8.3	51777	173.85	190000	0.97	MDFH177DS225M4 MDF177DS225M4
9.3	46210	155.93	190000	1.08	
11	39068	135.39	190000	1.28	
12	35813	122.84	190000	1.40	
14	30696	105.81	190000	1.63	
16	26859	88.93	190000	1.86	
19	22618	77.00	190000	2.21	
23	18685	64.16	190000	2.68	
27	15917	54.71	190000	3.14	
12.1	33411	122.00	150000	0.96	MDFA167DS225M4 MDFAF167DS225M4 MDF167DS225M4 MDFF167DS225M4
15.1	26729	97.60	147200	1.20	
17.0	23771	86.80	140100	1.35	
19.5	20710	75.62	132000	1.55	
21.9	18478	67.47	125600	1.73	
25.6	15750	57.51	117000	2.03	
31.0	13050	47.65	107400	2.45	

n_a [1/min]	M_a [Nm]	i	F_{Ra} [N]	f_B	typ motoreduktora *gearmotor type*
45kW					
22	20000	68.28	81300	0.90	MDFA157DS225M4 MDFAF157DS225M4 MDF157DS225M4 MDFF157DS225M4
24	17600	60.25	81600	1.00	
28	15300	52.24	81300	1.20	
32	13600	46.48	80900	1.30	
37	11700	40.06	79900	1.55	
45	9510	32.55	78000	1.90	
53	8070	27.60	76200	2.2	
30	14300	48.80	55200	0.85	MDFA127DS225M4 MDFAF127DS225M4 MDF127DS225M4 MDFF127DS225M4
35	12300	42.15	56000	0.95	
39	10900	37.28	56200	1.10	
47	9160	31.33	56100	1.30	
58	7400	25.30	55400	1.60	
55	7850	26.86	55700	1.10	MDFA127DS225M4 MDFAF127DS225M4 MDF127DS225M4 MDFF127DS225M4
60	7180	24.57	55300	1.20	
69	6250	21.38	54500	1.90	
78	5520	18.87	53700	2.0	
90	4780	16.36	52600	2.3	
101	4250	14.55	51600	2.6	
117	3670	12.54	50300	2.7	
144	2980	10.19	48400	3.2	
166	2590	8.86	46600	2.7	
186	2300	7.88	45500	2.6	
216	1990	6.80	44000	3.5	
266	1610	5.52	42000	3.7	
53	8060	27.57	32400	0.95	MDFA107DS225M4 MDFAF107DS225M4 MDF107DS225M4 MDFF107DS225M4
58	7350	25.14	32800	1.05	
68	6360	21.76	33200	1.25	
77	5610	19.20	33300	1.40	
89	4850	16.58	33300	1.60	
100	4290	14.67	33100	1.80	
119	3600	12.33	32700	1.95	MDFA107DS225M4 MDFAF107DS225M4 MDF107DS225M4 MDFF107DS225M4
148	2910	9.96	31900	2.2	
152	2830	9.69	31000	1.75	
176	2450	8.37	30400	1.95	
199	2160	7.40	29900	2.1	
236	1820	6.22	29100	2.5	
55kW					
9.3	56478	155.93	190000	0.89	MDFH177D250M4 MDF177D250M4
11	47750	135.39	190000	1.05	
12	43771	122.84	190000	1.14	
14	37518	105.81	190000	1.33	
16	32828	88.93	190000	1.52	
19	27645	77.00	190000	1.81	
23	22837	64.16	190000	2.19	
27	19454	54.71	190000	2.57	
15.2	32559	97.60	147200	0.98	MDFA167D250M4 MDFAF167D250M4 MDF167D250M4 MDFF167D250M4
17.1	28955	86.80	140100	1.11	
19.6	25226	75.62	132000	1.27	

n_a [1/min]	M_a [Nm]	i	F_{Ra} [N]	f_B	typ motoreduktora *gearmotor type*
55kW					
21.9	22507	67.47	125600	1.42	MDFA167D250M4 MDFAF167D250M4 MDF167D250M4 MDFF167D250M4
25.7	19184	57.51	117000	1.67	
31.1	15896	47.65	107400	2.01	
36.4	13568	40.67	99700	2.36	
24	21500	60.25	73800	0.85	MDFA157D250M4 MDFAF157D250M4 MDF157D250M4 MDFF157D250M4
28	18600	52.24	74600	0.95	
32	16500	46.68	74800	1.10	
37	14300	40.06	74700	1.25	
45	11600	32.55	73800	1.55	
53	9830	27.60	72600	1.85	
52	10200	28.60	72900	1.65	MDFA157D250M4 MDFAF157D250M4 MDF157D250M4 MDFF157D250M4
58	9060	25.43	71900	1.65	
67	7890	22.16	70600	2.3	
75	7040	19.77	69400	2.4	
88	6000	16.85	67600	3.0	
40	13300	37.28	50600	0.90	MDFA127D250M4 MDFAF127D250M4 MDF127D250M4 MDFF127D250M4
47	11200	31.33	51400	1.10	
58	9010	25.30	51600	1.35	
69	7610	21.38	51300	1.60	MDFA127D250M4 MDFAF127D250M4 MDF127D250M4 MDFF127D250M4
78	6720	18.87	50800	1.65	
90	5820	16.36	50100	1.90	
101	5180	14.55	49400	2.1	
118	4470	12.54	48400	2.2	
145	3630	10.19	46800	2.6	
166	3160	8.86	45100	2.2	
187	2810	7.88	44200	2.1	
217	2420	6.80	42900	2.9	
267	1970	5.52	41100	3.0	
315	1670	4.68	39600	3.6	
75kW					
14	51161	105.81	190000	0.98	MDFH177D280S4 MDF177D280S4
16	44766	88.93	190000	1.12	
19	37697	77.00	190000	1.33	
23	31141	64.16	190000	1.61	
27	26528	54.71	190000	1.88	
34	21066	42.65	190000	2.37	
37	19358	38.69	190000	2.58	
42	17054	34.82	190000	2.93	
44	16278	33.33	190000	3.07	
21.9	30692	67.47	125600	1.04	MDFA167D280S4 MDFAF167D280S4 MDF167D280S4 MDFF167D280S4
25.7	26161	57.51	117000	1.22	
31.1	21676	47.65	107400	1.48	
36.4	18501	40.67	99700	1.73	
45.8	14694	32.30	93700	2.18	
51.4	13111	28.82	88600	2.44	

n_a [1/min]	M_a [Nm]	i	F_{Ra} [N]	f_B	typ motoreduktora *gearmotor type*
75kW					
32	22500	46.48	62900	0.80	MDFA157D280S4 MDFAF157D280S4 MDF157D280S4 MDFF157D280S4
37	19400	40.06	64400	0.95	
45	15800	32.55	65400	1.15	
54	13400	27.60	65500	1.35	
52	13800	28.60	65500	1.25	MDFA157D280S4 MDFAF157D280S4 MDF157D280S4 MDFF157D280S4
58	12300	25.43	65400	1.20	
67	10700	22.16	64900	1.70	
75	9570	19.77	64300	1.80	
88	8150	16.85	63200	2.2	
106	6760	13.96	61600	2.5	
124	5770	11.92	60100	2.8	
58	12200	25.30	44000	1.00	MDFA127D280S4 MDFAF127D280S4 MDF127D280S4 MDFF127D280S4
69	10300	21.38	44800	1.15	
78	9130	18.87	45100	1.20	
90	7920	16.36	45200	1.40	
102	7040	14.55	45000	1.55	MDFA127D280S4 MDFAF127D280S4 MDF127D280S4 MDFF127D280S4
118	6070	12.54	44600	1.65	
145	4930	10.19	43700	1.95	
167	4290	8.86	42200	1.65	
188	3810	7.88	41600	1.55	
218	3290	6.80	40700	2.1	
268	2670	5.52	39300	2.2	
316	2270	4.68	38100	2.7	
90kW					
16	53719	88.93	190000	0.93	MDFH177D280M4 MDF177D280M4
19	45237	77.00	190000	1.11	
23	37370	64.16	190000	1.34	
27	31833	54.71	190000	1.57	
34	25279	42.65	190000	1.98	
37	23230	38.69	190000	2.15	
42	20464	34.82	190000	2.44	
44	19534	33.33	190000	2.56	
47	18287	30.98	190000	2.73	
52	16529	27.79	190000	3.03	
25.7	31393	57.51	117000	1.02	MDFA167D280M4 MDFAF167D280M4 MDF167D280M4 MDFF167D280M4
31.1	26011	47.65	107400	1.23	
36.4	22202	40.67	99700	1.44	
45.8	17633	32.30	93700	1.81	
51.4	15733	28.82	88600	2.03	
60.3	13407	24.56	81700	2.39	
45	18900	32.55	59100	0.95	MDFA157D280M4 MDFAF157D280M4 MDF157D280M4 MDFF157D280M4
54	16000	27.60	60200	1.10	

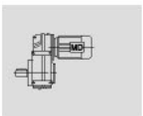

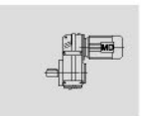

n_a [1/min]	M_a [Nm]	i	F_{Ra} [N]	f_B	typ motoreduktora *gearmotor type*
90kW					
52	16600	28.60	60000	1.00	MDFA157D280M4 MDFAF157D280M4 MDF157D280M4 MDFF157D280M4
58	14800	25.43	60400	1.00	
67	12900	22.16	60600	1.40	
75	11500	19.77	60500	1.50	
88	9790	16.85	59900	1.85	
106	8110	13.96	58900	2.1	
124	6920	11.92	57800	2.3	
58	14700	25.30	33100	0.8	MDFA127D280M4 MDFAF127D280M4 MDF127D280M4 MDFF127D280M4
69	12400	21.38	38800	0.95	MDFA127D280M4 MDFAF127D280M4 MDF127D280M4 MDFF127D280M4
78	11000	18.87	40900	1.00	
90	9500	16.36	41500	1.15	
102	8450	14.55	41700	1.30	
118	7280	12.54	41800	1.35	
145	5920	10.19	41400	1.60	
167	5150	8.86	40100	1.35	
188	4580	7.88	39700	1.30	
218	3950	6.80	39000	1.75	
268	3210	5.52	37900	1.85	
316	2720	4.68	36900	2.2	
110kW					
19	55289	77.00	190000	0.90	MDFH177D315S4 MDF177D315S4
23	45674	64.16	190000	1.09	
27	38907	54.71	190000	1.29	
34	30897	42.65	190000	1.62	
37	28392	38.69	190000	1.76	
42	25012	34.82	177200	2.00	
44	23875	33.33	190000	2.09	
47	22351	30.98	169900	2.24	
52	20202	27.79	159000	2.48	
60	17508	24.25	147000	2.86	
31.1	31791	47.65	107400	1.01	MDFA167D315S4 MDFAF167D315S4 MDF167D315S4 MDFF167D315S4
36.4	27135	40.67	99700	1.18	
45.8	21551	32.30	93700	1.48	
51.4	19229	28.82	88600	1.66	
60.3	16387	24.56	81700	1.95	
72.7	13578	20.35	74000	2.36	
85.2	11589	17.37	67900	2.76	
54	19500	27.60	53100	0.90	MDFA157D315S4 MDFAF157D315S4 MDF157D315S4 MDFF157D315S4
67	15700	22.16	54900	1.15	MDFA157D315S4 MDFAF157D315S4 MDF157D315S4 MDFF157D315S4
75	14000	19.77	55400	1.20	
88	11900	16.85	55600	1.50	
106	9880	13.96	55300	1.70	
125	8430	11.92	54700	1.90	

n_a [1/min]	M_a [Nm]	i	F_{Ra} [N]	f_B	typ motoreduktora *gearmotor type*
132kW					
23	54809	64.16	190000	0.91	MDFH177D315M4 MDF177D315M4
27	46689	54.71	190000	1.07	
34	37076	42.65	190000	1.35	
37	34070	38.69	190000	1.47	
42	30014	34.82	177200	1.67	
44	28650	33.33	190000	1.75	
47	26821	30.98	169900	1.86	
52	24242	27.79	159000	2.06	
60	21010	24.25	147000	2.38	
66	19100	21.89	137500	2.62	
36.5	32475	40.67	99700	0.99	MDFA167D315M4 MDFAF167D315M4 MDF167D315M4 MDFF167D315M4
45.9	25791	32.30	93700	1.24	
51.5	23013	28.82	88600	1.39	
60.4	19611	24.56	81700	1.63	
72.9	16249	20.35	74000	1.97	
85.4	13870	17.37	67900	2.31	
67	18800	22.16	48700	0.95	MDFA157D315M4 MDFAF157D315M4 MDF157D315M4 MDFF157D315M4
75	16800	19.77	49800	1.00	
88	14300	16.85	50900	1.25	
106	11900	13.96	51400	1.45	
125	10100	11.92	51400	1.60	
160kW					
27	56593	54.71	190000	0.88	MDFH177D315M4a MDF177D315M4a
34	44941	42.65	190000	1.11	
37	41297	38.69	190000	1.21	
42	36381	34.82	177200	1.37	
44	34727	33.33	190000	1.44	
47	32511	30.98	169900	1.54	
52	29385	27.79	159000	1.70	
60	25467	24.25	147000	1.96	
66	23152	21.89	137500	2.16	
72	21222	20.21	188200	2.36	
77	19844	18.86	126100	2.52	
84	18190	17.23	177200	2.75	
91	16791	15.85	116600	2.98	
60.4	23771	24.56	81700	1.35	MDFA167D315M4a MDFAF167D315M4a MDF167D315M4a MDFF167D315M4a
72.9	19696	20.35	74000	1.62	
85.4	16812	17.37	67900	1.90	
130.5	11236	11.37	68000	2.85	MDFA167D315M4a MDFAF167D315M4a MDF167D315M4a MDFF167D315M4a
154.6	9489	9.60	64000	3.27	

n_a [1/min]	M_a [Nm]	i	F_{Ra} [N]	f_B	typ motoreduktora *gearmotor type*
160kW					
95	16084	15.23	78225	1.99	MDFH167D315M4a MDF167D315M4a
97	15753	14.95	112770	2.03	
109	14018	13.34	104685	2.28	
128	11938	11.37	98385	2.68	
154	9922	9.42	93030	3.23	
88	17300	16.85	44800	1.05	MDFA157D315M4a MDFAF157D315M4a MDF157D315M4a MDFF157D315M4a
106	14400	13.96	46400	1.20	
125	12300	11.92	47100	1.30	
200kW					
37	51622	38.69	190000	0.97	MDFH177D315M4b MDF177D315M4b
42	45476	34.82	177200	1.10	
44	43409	33.33	190000	1.15	
47	40638	30.98	169900	1.23	
52	36731	27.79	159000	1.36	
60	31833	24.25	147000	1.57	
66	28939	21.89	137500	1.73	
72	26528	20.21	188200	1.88	
77	24805	18.86	126100	2.02	
84	22738	17.23	177200	2.20	
91	20989	15.85	116600	2.38	
106	18019	13.72	112700	2.77	
60.42	29714	24.56	81700	1.08	MDFA167D315M4b MDFAF167D315M4b MDF167D315M4b MDFF167D315M4b
72.92	24620	20.35	74000	1.30	
85.43	21015	17.37	67900	1.52	
130.55	14045	11.37	68000	2.28	MDFA167D315M4b MDFAF167D315M4b MDF167D315M4b MDFF167D315M4b
154.58	11862	9.60	64000	2.61	
88	21700	16.85	36100	0.85	MDFA157D315M4b MDFAF157D315M4b MDF157D315M4b MDFF157D315M4b
106	18000	13.96	39200	0.95	
125	15300	11.92	41000	1.05	
250kW					
42	56845	34.82	177200	0.88	MDFH177D355M4 MDF177D355M4
44	54261	33.33	190000	0.92	
47	50798	30.98	169900	0.98	
52	45913	27.79	159000	1.09	
60	39792	24.25	147000	1.26	

n_a [1/min]	M_a [Nm]	i	F_{Ra} [N]	f_B	typ motoreduktora *gearmotor type*
250kW					
66	36174	21.89	137500	1.38	MDFH177D355M4 MDF177D355M4
72	33160	20.21	188200	1.51	
77	31006	18.86	126100	1.61	
84	28423	17.23	177200	1.76	
91	26236	15.85	116600	1.91	
106	22524	13.72	112700	2.22	
127	18799	11.44	99100	2.66	
149	16023	9.75	90200	3.12	
71	33627	20.32	150000	0.95	
75	31833	19.29	131880	1.01	
85	28088	17.16	122850	1.14	
95	25132	15.23	78225	1.27	
97	24613	14.95	112770	1.30	
73.07	30713	20.35	74000	1.04	MDFA167D355M4 MDFAF167D355M4 MDF167D355M4 MDFF167D355M4
85.61	26216	17.37	67900	1.22	
130.81	17521	11.37	68000	1.83	MDFA167D355M4 MDFAF167D355M4 MDF167D355M4 MDFF167D355M4
154.90	14797	9.60	64000	2.1	
181.56	12624	8.19	62000	2.3	

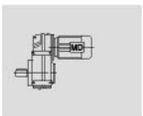

6.5. Wymiary
6.5. Dimensions

MDF27..~MDF157..

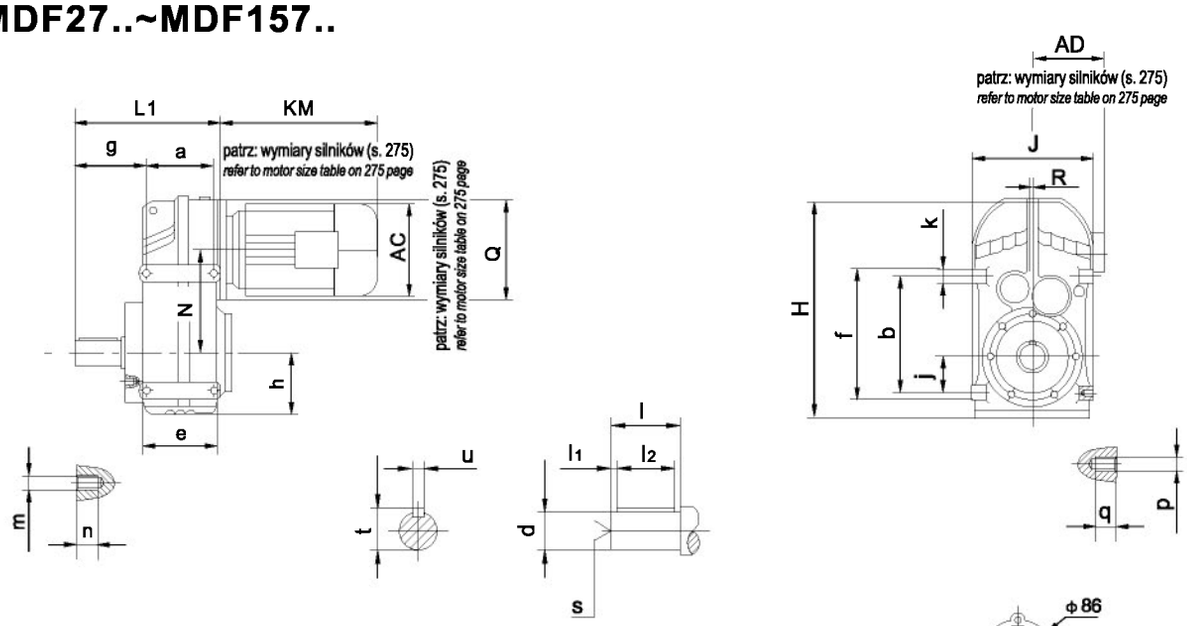

MDFA27B..~MDFA157B..

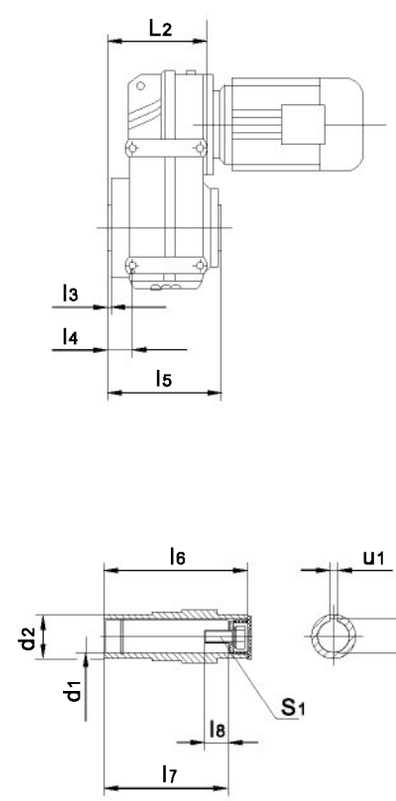

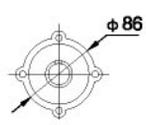

MDF27..

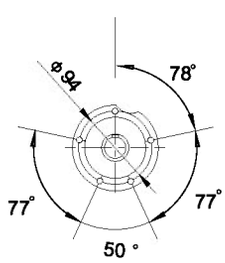

MDF37..

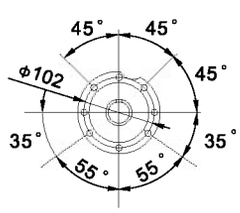

MDF47..

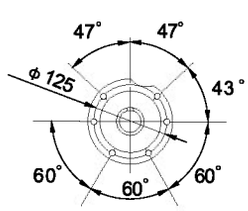

MDF57..~MDF67..

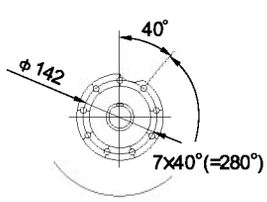

MDF77..

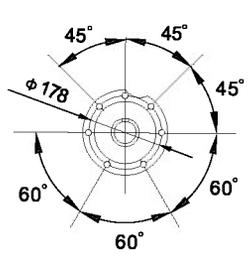

MDF87..

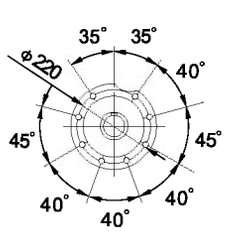

MDF97..

Wielkość *size*	a b	e f	g	h	j	K R	m n	p q	Wymiary wału *(shaft dimension)*				
									d	l	l_1 l_2	s	t u
MDF27.. MDFA27B..	65 100	80 116	71.5	60	31	16 0	M8 16	M8 16	25k6	50	5 40	M10	28 8
MDF37.. MDFA37B..	77 115	95 135	72.5	76	31	20 0	M8 11	M8 11	25k6	50	5 40	M10	28 8
MDF47.. MDFA47B..	93 145	109 165	91	77	43	20 0	M8 11	M10 15	30k6	60	3.5 50	M10	33 8
MDF57.. MDFA57B..	102 170	126 195	104.5	93	55	25 0	M12 17	M12 17	35k6	70	7 56	M12	38 10
MDF67.. MDFA67B..	112 190	131 215	118.5	97	60	25 0	M12 17	M12 17	40k6	80	5 70	M16	43 12
MDF77.. MDFA77B..	140 240	165 275	137.5	121	70	35 0	M12 17	M16 26	50k6	100	10 80	M16	53.5 14
MDF87.. MDFA87B..	165 310	195 350	163	152	100	40 0	M16 26	M16 26	60m6	120	5 110	M20	64 18
MDF97.. MDFA97B..	205 350	240 400	190.5	178	120	50 0	M16 26	M20 28	70m6	140	7.5 125	M20	74.5 20
MDF107.. MDFA107B..	220 400	260 460	241.5	200	125	60 0	/	M24 36	90m6	170	5 160	M24	95 25
MDF127.. MDFA127B..	270 450	316 520	291	236	142	70 10	/	M30 45	110m6	210	15 180	M24	116 28
MDF157.. MDFA157B..	310 540	364 620	325	286	170	80 15	/	M36 55	120m6	210	5 200	M24	127 32

Wielkość *size*	Wymiary wału drążonego *(hollow shaft dimension)*								H J	L_1	L_2	N	Q
	d_1	d_2	l_3 l_4	l_5	l_6 l_7	l_8	s_1	t_1 u_1					
MDF27.. MDFA27B..	25H7	40	2 20.5	107	104 89	17	M10X25	28.3 8	223 150	146	95	98.7	120
MDF37.. MDFA37B..	30H7	45	2.5 22.5	123	120 105	17	M10X25	33.3 8	252 165	160	110	112	120
MDF47.. MDFA47B..	35H7	50	3 31	153	150 132	22	M10X25	38.3 10	269 180	193	133	128.1	120
MDF57.. MDFA57B..	40H7	55	3 33.5	170	166 142	29	M16X40	43.3 12	317 200	221	150	136	160
MDF67.. MDFA67B..	40H7	55	3.5 37	184	180 156	29	M16X40	43.3 12	343 212	242	161	159.5	160
MDF77.. MDFA77B..	50H7	70	4 36.5	213	210 183	32	M16X45	53.8 14	426 270	294	193	200	200
MDF87.. MDFA87B..	60H7	85	4 43	243	240 210	36	M20X50	64.4 18	531 330	344	224	246.7	250
MDF97.. MDFA97B..	70H7	95	4 48.5	303	300 270	34	M20X50	74.9 20	623 400	416	274	285	300
MDF107.. MDFA107B..	90H7	118	2.5 69.5	353	350 313	40	M24X60	95.4 25	717 450	484	312	332.4	350
MDF127.. MDFA127B..	100H7	135	2.5 79.25	413	410 373	38	M24X60	106.4 28	856 530	585	373	382.6	450
MDF157.. MDFA157B..	120H7	155	7 118	503	500 460	36	M24X60	127.4 32	1021 660	662	455	447	550

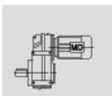

MDFH27B..~MDFH157B..

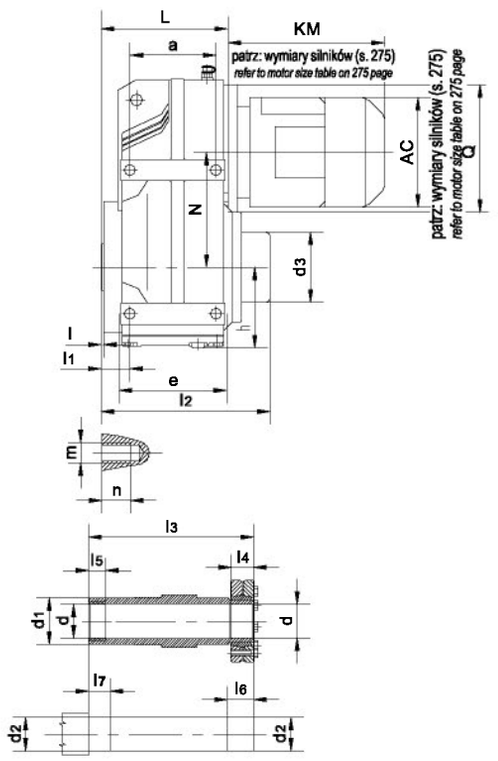

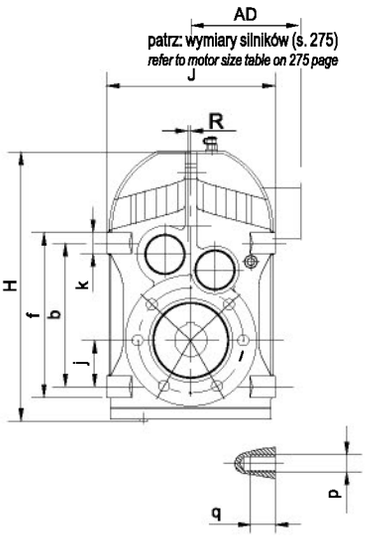

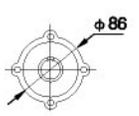

MDF..27B..

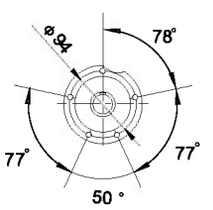

MDF..37B..

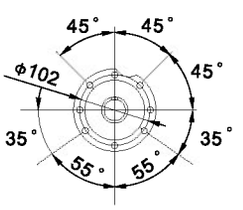

MDF..47B..

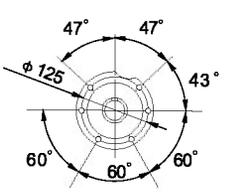

MDF..57B..~MDF..67B..

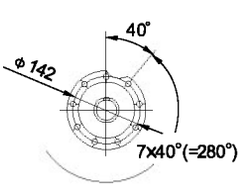

MDF..77B..

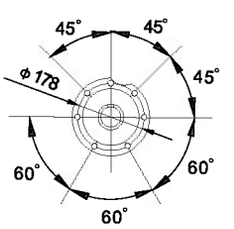

MDF..87B..

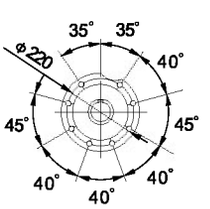

MDF..97B..

MDFV27B..~MDFV107B..

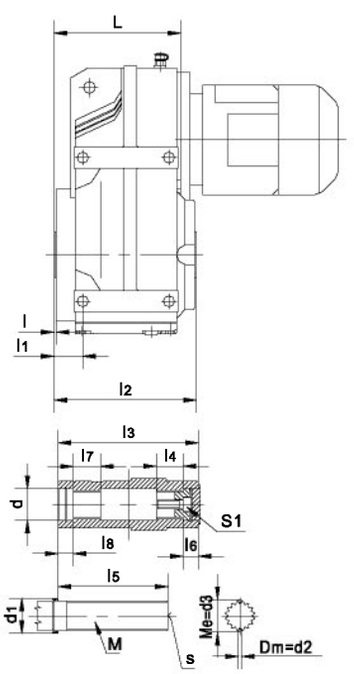

Wielkość *size*	a b	e f	h	j	K R	m n	p q	d	d_1	d_2	d_3	l	s
MDFH27B.. MDFV27B..	65 100	80 116	60	31	16 0	M8 16	M8 16	25H7 $32^{+0.1}_{0}$	40 ≥36	25h7 2.25	25h6 $28.03^{0}_{-0.03}$	2	M10
MDFH37B.. MDFV37B..	77 115	95 135	76	31	20 0	M8 11	M8 11	30H7 $37^{+0.1}_{0}$	45 ≥42	30h7 2.75	30h6 $33.03^{0}_{-0.03}$	2.5	M10
MDFH47B.. MDFV47B..	93 145	109 165	77	43	20 0	M8 11	M10 15	35H7 $37^{+0.1}_{0}$	50 ≥42	35h7 4	35h6 $38.92^{0}_{-0.03}$	3	M10
MDFH57B.. MDFV57B..	102 170	126 195	93	55	25 0	M12 17	M12 17	40H7 $37^{+0.1}_{0}$	55 ≥42	40h7 4	40h6 $38.92^{0}_{-0.03}$	3	M10
MDFH67B.. MDFV67B..	112 190	131 215	97	60	25 0	M12 17	M12 17	40H7 $47^{+0.1}_{0}$	55 ≥52	40h7 4	40h6 $48.85^{0}_{-0.03}$	3.5	M16
MDFH77B.. MDFV77B..	140 240	165 275	121	70	35 0	M12 17	M16 26	50H7 $57^{+0.1}_{0}$	70 ≥62	50h7 4	50h6 $54.13^{0}_{-0.03}$	4	M16
MDFH87B.. MDFV87B..	165 310	195 350	152	100	40 0	M16 26	M16 26	65H7 $72^{+0.1}_{0}$	85 ≥82	65h7 4	65h6 $68.96^{0}_{-0.04}$	4	M20
MDFH97B.. MDFV97B..	205 350	240 400	178	120	50 0	M16 26	M20 28	75H7 $72^{+0.1}_{0}$	95 ≥90	75h7 4	75h6 $74.15^{0}_{-0.04}$	4	M20
MDFH107B.. MDFV107B..	220 400	260 460	200	125	60 0	–	M24 36	95H7 $90^{+0.1}_{0}$	118 ≥105	95h7 6	95h6 $90.99^{0}_{-0.04}$	2.5	M20
MDFH127B..	270 450	316 520	236	142	70 10	–	M30 45	105H7	135	105h7	105h6	2.5	M20
MDFH157B..	310 540	364 620	286	170	80 15	–	M36 55	125H7	155	125h7	125h6	7	M20

Wielkość *size*	Wymiary wału drążonego *(hollow shaft dimension)*													
	H J	N	Q	l_1	l_2	l_3	l_4	l_5	l_6	l_7	l_8	M	S_1	L
MDFH27B.. MDFV27B..	223 150	98.7	120	20.5	131 104	126 104	25 32	20 72	30 17	25 22	– 17	- 25X1.25X30X18	– M10X30	95
MDFH37B.. MDFV37B..	252 165	112	120	22.5	155 122	146 120	31 25	20 85	36 18	25 25	– 18	- 30X1.25X30X22	– M10X30	110
MDFH47B.. MDFV47B..	269 180	128.1	120	31	184 152	177 150	32 32	20 115	37 18	25 32	– 18	- 35X2X30X16	– M10X30	133
MDFH57B.. MDFV57B..	317 200	136	160	33.5	200 168	195 166	26 32	20 130	31 18	25 32	– 18	- 35X2X30X16	– M10X30	150
MDFH67B.. MDFV67B..	343 212	159.5	160	37	215.5 180	208 180	38 42	20 130	43 25	25 42	– 25	- 45X2X30X21	– M10X30	161
MDFH77B.. MDFV77B..	426 270	200	200	36.5	249 210	241 210	36 52	30 160	41 23	35 52	– 23	- 50X2X30X24	– M16X50	193
MDFH87B.. MDFV87B..	531 330	246.7	250	43	291 240	281 240	41 62	40 180	46 25	45 62	– 25	- 65X2X30X31	– M20X60	224
MDFH97B.. MDFV97B..	623 400	285	300	48.5	357 300	345 300	55 72	50 240	60 25	55 72	– 25	- 70X2X30X34	– M20X60	274
MDFH107B.. MDFV107B..	717 450	332.4	350	69.5	420 353	405 350	65 89	60 290	75 26	70 89	– 26	- 85X3X30X27	– M20X60	312
MDFH127B..	856 530	382.6	450	79.25	505	485	85	70	95	80	–	–	–	373
MDFH157B..	1021 660	447	550	118	598	580	90	80	100	90	–	–	–	455

MDFV..B.. Wielowypusty wykonane są zgodnie z DIN. Na życzenie mogą być wykonane w GB lub ISO.
MDFV..B.. Splined shaft is according to DIN standard. If you need GB or ISO standard, please contact us.

MDFF27..~MDFF167..

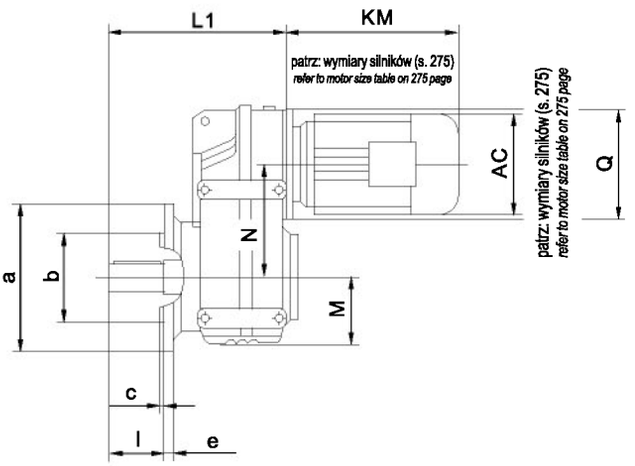

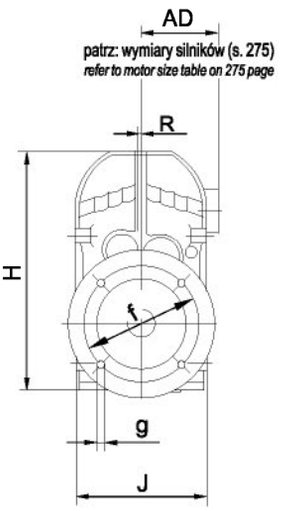

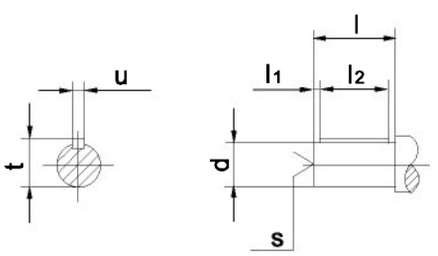

MDFAF27..~MDFAF167..

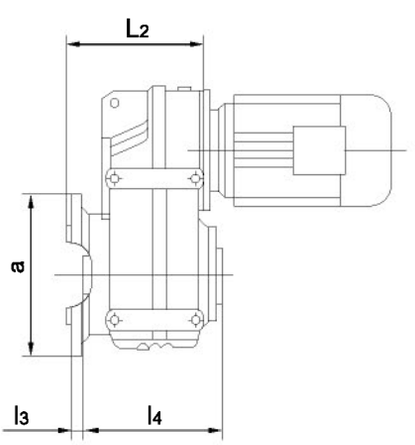

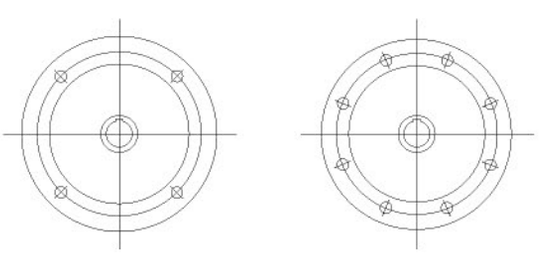

Fig.1 Fig.2

wersja kołnierzowa
flange form

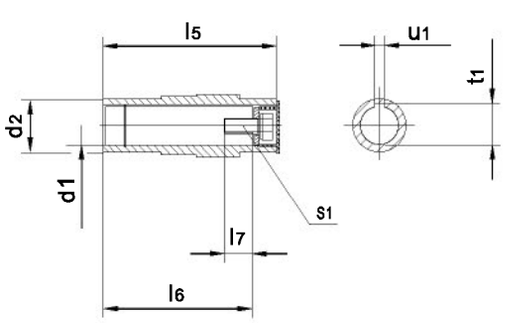

Wielkość *size*	Kołnierz *flange*	a b	c e	f g	Wymiary wału *shaft dimension*				Wymiary wału drążonego *hollow shaft dimension*					H J	L_1 L_2 R	M N Q
					d l	l_1 l_2	s	t u	d_1 d_2	l_3 l_4	l_5 l_6	l_7 s_1	t_1 u_1			
MDFF27.. MDFAF27..	Flg.1	160 110j6	3.5 10	130 8.5	25k6 50	5 40	M10	28 8	25H7 40	20 107	104 89	17 M10X25	28.3 8	223 150	165 118.5 0	60 98.7 120
MDFF37.. MDFAF37..	Flg.1	160 110j6	3.5 10	130 9	25k6 50	5 40	M10	28 8	30H7 45	24 123	120 105	17 M10X25	33.3 8	252 165	184 138 0	76 112 120
MDFF47.. MDFAF47..	Flg.1	200 130j6	3.5 12	165 11	30k6 60	3.5 50	M10	33 8	35H7 50	25 153	150 132	22 M10X25	38.3 10	269 180	218 162 0	77 128.1 120
MDFF57.. MDFAF57..	Flg.1	250 180j6	4 15	215 13.5	35k6 70	7 56	M12	38 10	40H7 55	23.5 170	166 142	29 M16X40	43.3 12	317 200	243 177 0	93 136 160
MDFF67.. MDFAF67..	Flg.1	250 180j6	4 15	215 13.5	40k6 80	5 70	M16	43 12	40H7 55	23 184	180 156	29 M16X40	43.3 12	343 212	264 188 0	97 159.5 160
MDFF77.. MDFAF77..	Flg.1	300 230h6	4 16	265 13.5	50k6 100	10 80	M16	53.5 14	50H7 70	37 213	210 183	32 M16X45	53.8 14	426 270	330 234 0	121 200 200
MDFF87.. MDFAF87..	Flg.1	350 250h6	5 18	300 17.5	60m6 120	5 110	M20	64 18	60H7 85	30 243	240 210	36 M20X50	64.4 18	531 330	374 259 0	152 246.7 250
MDFF97.. MDFAF97..	Flg.2	450 350h6	5 22	400 17.5	70m6 140	7.5 125	M20	74.5 20	70H7 95	41.5 303	300 270	34 M20X50	74.9 20	623 400	456 321 0	178 285 300
MDFF107.. MDFAF107..	Flg.2	450 350h6	5 22	400 17.5	90m6 170	5 160	M24	95 25	90H7 118	41 353	350 313	40 M24X60	95.4 25	717 450	523 358 0	200 332.4 350
MDFF127.. MDFAF127..	Flg.2	550 450h6	5 25	500 17.5	110m6 210	15 180	M24	116 28	100H7 135	51 413	410 373	38 M24X60	106.4 28	856 530	634 429 10	236 382.6 450
MDFF157.. MDFAF157..	Flg.2	660 550h6	6 28	600 22	120m6 210	5 200	M24	127 32	120H7 155	60 503	500 460	36 M24X60	127.4 32	1021 660	725 521 15	286 447 550
MDFF167.. MDFAF167..	Flg.2	660 550h6	6 31	600 22	160m6 250	15 220	M30	169 40	130H7 190	54 520	517 469	36 M30 × 70	138.4 32	1038 706	780 536 0	282.5 451.5 550

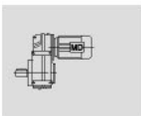

MDFHF27..~MDFHF167..

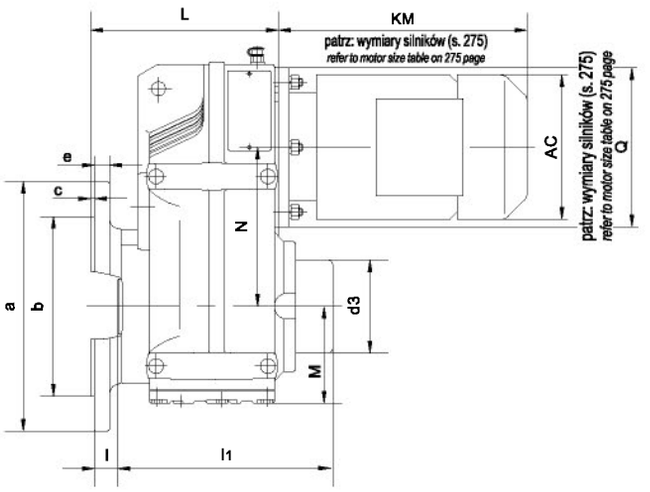

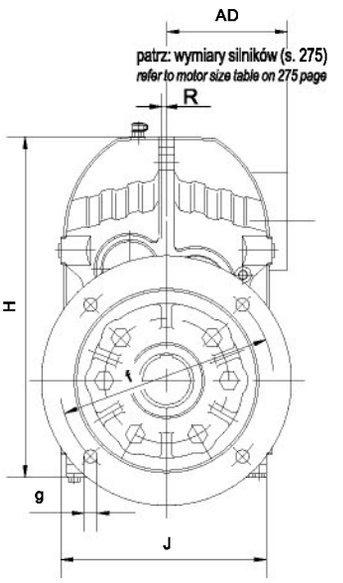

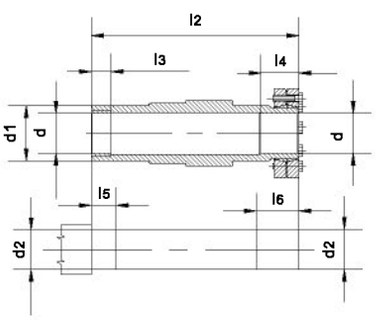

MDFHF167..

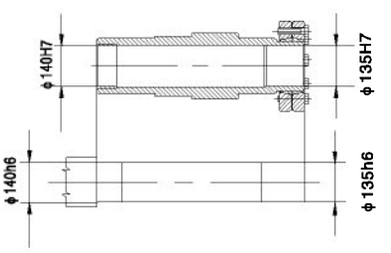

MDFVF27..~MDFVF107..

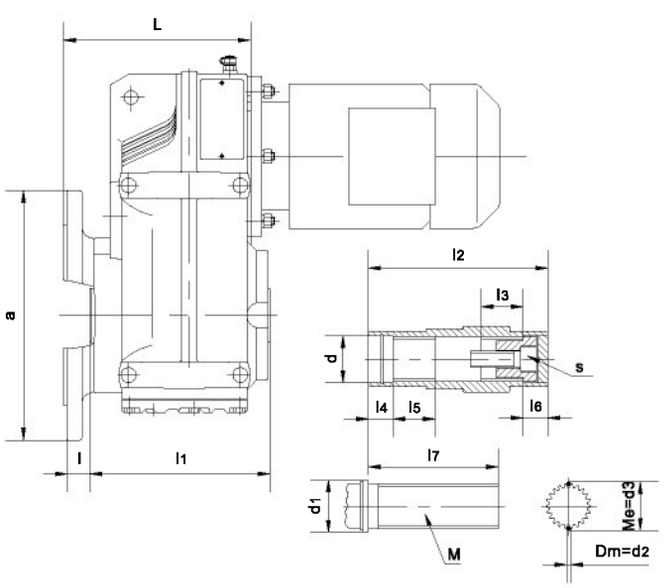

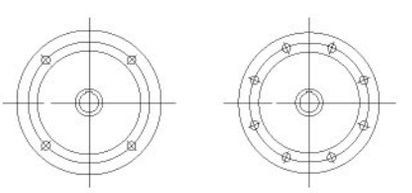

Flg.1 Flg.2

wersja kołnierzowa
flange form

Wielkość *size*	Kołnierz *flange*	a b	c e	f g	l	l_1	l_2	l_3	l_4	l_5	l_6	l_7	d	d_1	d_2	d_3	s	M	H J	L R	M N Q
MDFHF27..	Flg.1	160	3.5	130	20	131	126	20	25	25	30	–	25H7	40	25h6	58	–	–	223	118.5	60
MDFVF27..		110j6	10	8.5		104	104	22	17	22	17	72	$32^{+0.1}_{0}$	≥36	2.25	$28.05^{0}_{-0.03}$	M10X30	25X1.25 X30X18	150	0	98.7 120
MDFHF37..	Flg.1	160	3.5	130	24	155	146	20	31	25	36	–	30H7	45	30h6	75	–	–	252	138	76
MDFVF37..		110j6	10	9		122	120	25	18	25	18	85	$37^{+0.1}_{0}$	≥42	2.75	$33.03^{0}_{-0.03}$	M10X30	30X1.25 X30X22	165	0	112 120
MDFHF47..	Flg.1	200	3.5	165	25	184	177	20	32	25	37	–	35H7	50	35h6	83	–	–	269	162	77
MDFVF47..		130j6	12	11		152	150	32	18	32	18	115	$37^{+0.1}_{0}$	≥42	4	$38.92^{0}_{-0.03}$	M10X30	35X2X 30X16	180	0	128.1 120
MDFHF57..	Flg.1	250	4	215	23.5	200	195	20	26	25	31	–	40H7	55	40h6	83	–	–	317	177	93
MDFVF57..		180j6	15	13.5		168	166	32	18	32	18	130	$37^{+0.1}_{0}$	≥42	4	$38.92^{0}_{-0.03}$	M10X30	35X2X 30X16	200	0	136 160
MDFHF67..	Flg.1	250	4	215	23	215.5	208	20	38	25	43	–	40H7	55	40h6	93	–	–	343	188	97
MDFVF67..		180j6	15	13.5		180	180	42	25	42	25	130	$47^{+0.1}_{0}$	≥52	4	$48.85^{0}_{-0.03}$	M16X50	45X2X 30X21	212	0	159.5 160
MDFHF77..	Flg.1	300	4	265	37	249	241	30	36	35	41	–	50H7	70	50h6	114	–	–	426	234	121
MDFVF77..		230h6	16	13.5		210	210	52	23	52	23	160	$55^{+0.1}_{0}$	≥62	4	$54.13^{0}_{-0.03}$	M16X50	50X2X 30X24	270	0	200 200
MDFHF87..	Flg.1	350	5	300	30	291	281	40	41	45	46	–	65H7	85	65h6	159	–	–	531	259	152
MDFVF87..		250h6	18	17.5		240	240	62	25	62	25	180	$72^{+0.1}_{0}$	≥82	4	$68.96^{0}_{-0.04}$	M20X60	65X2X 30X31	330	0	246.7 250
MDFHF97..	Flg.2	450	5	400	41.5	357	345	50	55	55	60	–	75H7	95	75h6	174	–	–	623	321	178
MDFVF97..		350h6	22	17.5		300	300	72	25	72	25	240	$72^{+0.1}_{0}$	≥90	4	$74.15^{0}_{-0.04}$	M20X60	70X2X 30X34	400	0	285 300
MDFHF107..	Flg.2	450	5	400	41	420	405	60	65	70	75	–	95H7	118	95h6	200	–	–	717	358	200
MDFVF107..		350h6	22	17.5		353	350	89	26	89	26	290	$90^{+0.1}_{0}$	≥105	6	$90.99^{0}_{-0.04}$	M20X60	85X3X 30X27	450	0	332.4 350
MDFHF127..	Flg.2	550	5	500	51	502	485	70	85	80	95	–	105H7	135	105h6	233	–	–	856	429	236
		450h6	25	17.5															530	10	382.6 450
MDFHF157..	Flg.2	660	6	600	60	598	580	80	90	90	100	–	125H7	155	125h6	275	–	–	1021	521	286
		550h6	28	22															660	15	447 550
MDFHF167..	Flg.2	660	6	600	54	667	645	90	122	100	130	–	Patrz: rys. *See the fig.*	190	Patrz: rys. *See the fig.*	315	–	–	1038	536	282.5
		550h6	31	22															706	0	451.5 550

MDFVF.. Wielowypusty wykonane są zgodnie z DIN. Na życzenie mogą być wykonane w GB lub ISO.
MDFVF.. Splined shaft is according to DIN standard. If you need GB or ISO standard, please contact us.

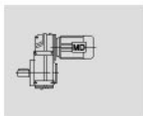

MDFA27..~MDFA157..

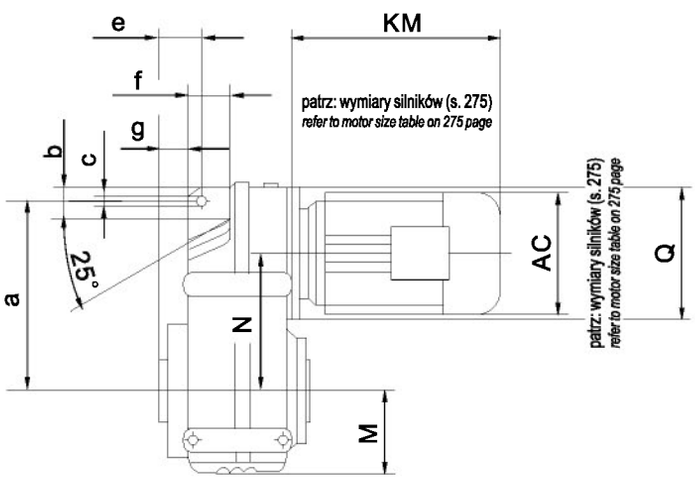

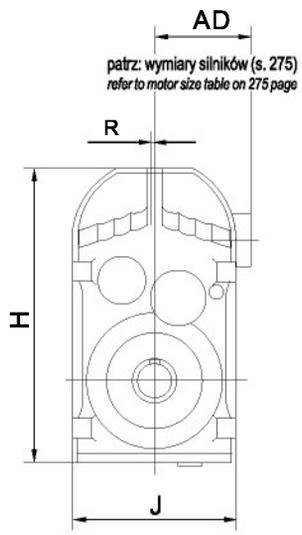

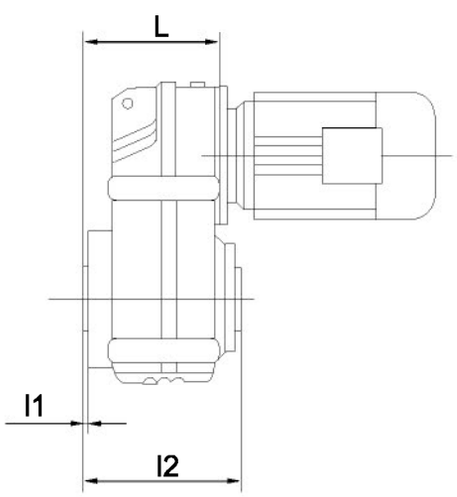

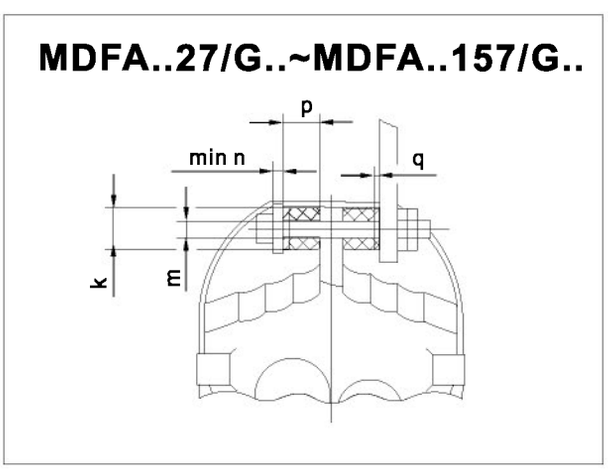

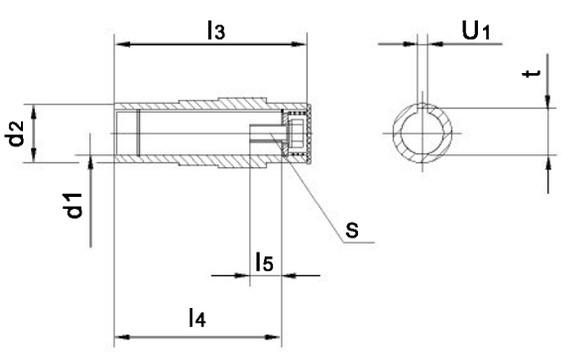

Wielkość *size*	a b	c e	f g	Wymiary wału drążonego *hollow shaft dimension* d_1 d_2	l_1 l_2	l_3 l_4	l_5 s	t u_1	Wym. ramienia reakcyjnego *torque arm dim.* k m n	p q	H J j	L R	M	N Q
MDFA27.. MDFA..27/G..	140 55	14 25	43 6	25H7 40	2 107	104 89	17 M10X25	28.3 8	40 12.5 5	20 1	223 154 10	95 0	60	98.7 120
MDFA37.. MDFA..37/G..	158 30	14 31.5	46 15	30H7 45	0.5 123	120 105	17 M10X25	33.3 8	40 12.5 5	20 1	252 172 12	110 0	76	112 120
MDFA47.. MDFA..47/G..	170 22	14 32	64 12	35H7 50	1 153	150 132	22 M10X25	38.3 10	40 12.5 5	20 1.8	269 189 12	133 0	77	128.1 120
MDFA57.. MDFA..57/G..	198 31	14 40.5	60 19.5	40H7 55	1 170	166 142	29 M16X40	43.3 12	40 12.5 5	20 2.4	317 210 14	150 0	93	136 160
MDFA67.. MDFA..67/G..	218 40	14 41	65 21	40H7 55	1 184	180 156	29 M16X40	43.3 12	40 12.5 5	20 3	343 223 16	161 0	97	159.5 160
MDFA77.. MDFA..77/G..	278 49	22 50	69 28	50H7 70	1 213	210 183	32 M16X45	53.8 14	60 21 10	30 3.2	426 282 20	193 0	121	200 200
MDFA87.. MDFA..87/G..	346 57	22 62	79 32	60H7 85	1 243	240 210	36 M20X50	64.4 18	60 21 10	30 4.5	531 336 26	224 0	152	246.7 250
MDFA97.. MDFA..97/G..	395 88	26 70	104 34	70H7 95	1 303	300 270	34 M20X50	74.9 20	80 25 12	40 5	623 414 30	274 0	178	285 300
MDFA107.. MDFA..107/G..	485 108	26 88	100 57	90H7 118	2.5 353	350 313	40 M24X60	95.4 25	80 25 12	40 6	717 456 36	312 0	200	332.4 350
MDFA127.. MDFA..127/G..	550 138	33 110	125 66	100H7 135	2.5 413	410 373	38 M24X60	106.4 28	100 32 15	60 9	856 530 40	373 10	236	382.6 450
MDFA157.. MDFA..157/G..	660 170	33 150	140 98	120H7 155	7 503	500 460	36 M24X60	127.4 32	120 32 15	60 9	1021 660 45	455 15	286	447 550
MDFA167...	–	–	–	130H7 190	8 520	517 469	36 M30X70	138.4 32	–	–	1038 706 –	476 0	282.5	451.5 550

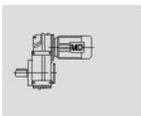

MDFH27..~MDFH157..

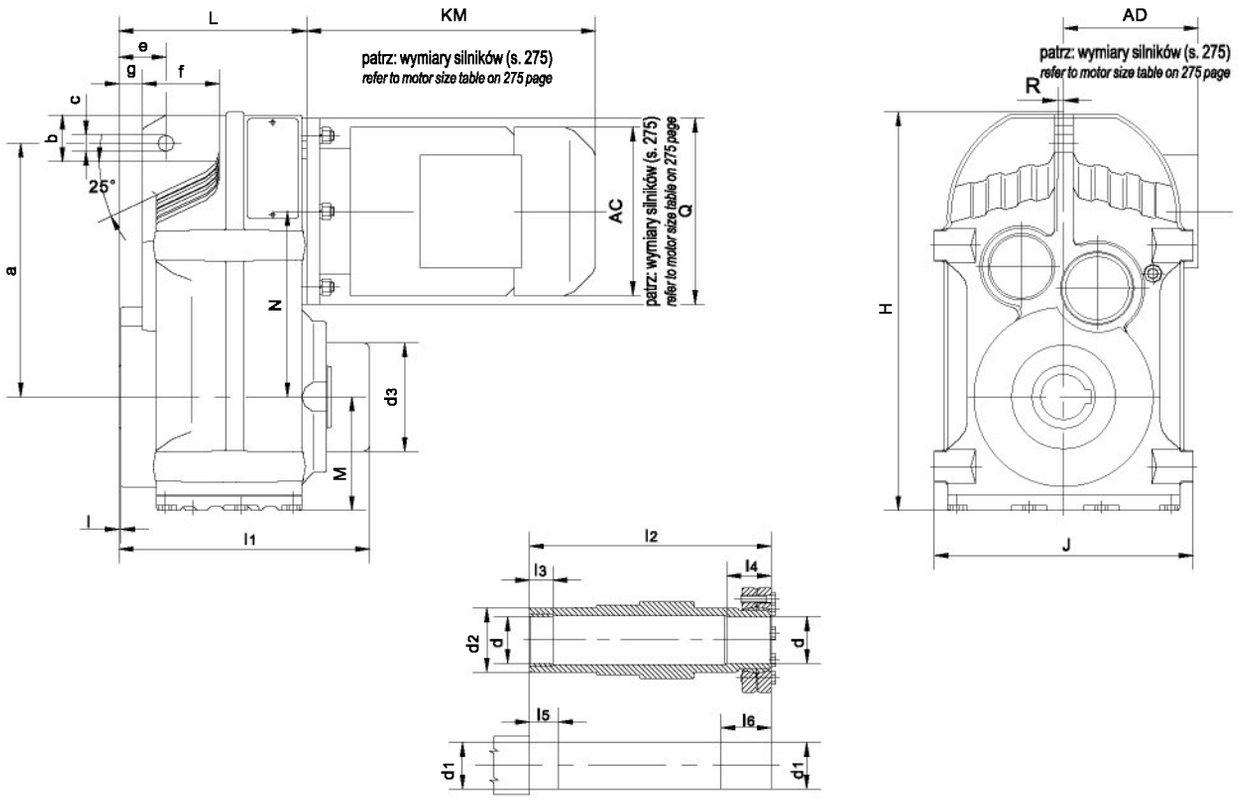

MDFV27..~MDFV107..

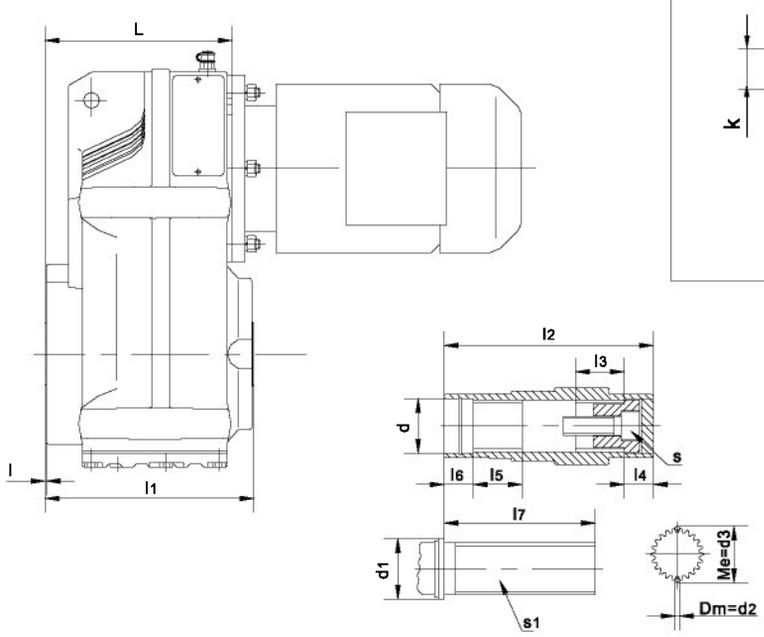

MDF..27/G..~MDF..157/G..

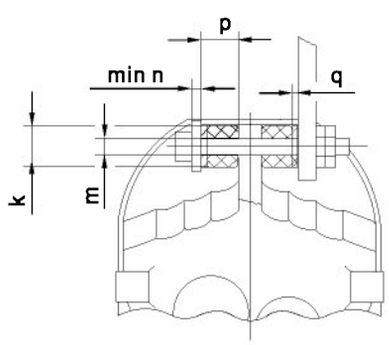

Wielkość *size*	a b	c e	f g	Wymiary wału drążonego *hollow shaft dimension*							
				l	l_1	l_2	l_3	l_4	l_5	l_6	l_7
MDFH27..	140	14	43	2	131	126	20	25	25	30	–
MDFV27..	55	25	6	2	104	104	22	17	22	17	72
MDFH37..	158	14	46	0.5	155	146	20	31	25	36	–
MDFV37..	30	31.5	15	0.5	122	120	25	18	25	18	85
MDFH47..	170	14	64	1	184	177	20	32	25	37	–
MDFV47..	22	32	12	1	152	150	32	18	32	18	115
MDFH57..	198	14	60	1	200	195	20	26	25	31	–
MDFV57..	31	40.5	19.5	1	168	166	32	18	32	18	130
MDFH67..	218	14	65	1	215.5	208	20	38	25	43	–
MDFV67..	40	41	21	1	180	180	42	25	42	25	130
MDFH77..	278	22	69	1	249	241	30	36	35	41	–
MDFV77..	49	50	28	1	210	210	52	23	52	23	160
MDFH87..	346	22	79	1	291	281	40	41	45	46	–
MDFV87..	57	62	32	1	240	240	62	25	62	25	180
MDFH97..	395	26	104	1	357	345	50	55	55	60	–
MDFV97..	88	70	34	1	300	300	72	25	72	25	240
MDFH107..	485	26	100	2.5	420	405	60	65	70	75	–
MDFV107..	108	86	57	2.5	353	350	89	26	89	26	290
MDFH127..	550 138	33 110	125 66	2.5	502	485	70	85	80	95	–
MDFH157..	660 170	33 150	140 98	7	598	580	80	90	90	100	–

Wielkość *size*	Wymiary wału drążonego *hollow shaft dimension*						Wymiary ramienia reakcyjnego *torque arm dimension*		H J j	L R	M	N Q
	d	d_1	d_2	d_3	s	s_1	k m n	p q				
MDFH27..	25H7	25h6	40	58	–	–	40 12.5 5	20	223 154 10	95 0	60	98.7
MDFV27..	$32^{+0.1}_{0}$	≥36	2.25	$28.05^{0}_{-0.03}$	M10X30	25X1.25X30X18		1				120
MDFH37..	30H7	30h6	45	75	–	–	40 12.5 5	20	252 172 12	110 0	76	112
MDFV37..	$37^{+0.1}_{0}$	>42	2.75	$33.03^{0}_{-0.03}$	M10X30	30X1.25X30X22		1				120
MDFH47..	35H7	35h6	50	83	–	–	40 12.5 5	20	269 189 12	133 0	77	128.1
MDFV47..	$37^{+0.1}_{0}$	>42	4	$38.92^{0}_{-0.03}$	M10X30	35X2X30X16		1.8				120
MDFH57..	40H7	40h6	55	83	–	–	40 12.5 5	20	317 210 14	150 0	93	136
MDFV57..	$37^{+0.1}_{0}$	>42	4	$38.92^{0}_{-0.03}$	M10X30	35X2X30X16		2.4				160
MDFH67..	40H7	40h6	55	93	–	–	40 12.5 5	20	343 223 16	161 0	97	159.5
MDFV67..	$47^{+0.1}_{0}$	>52	4	$48.85^{0}_{-0.03}$	M16X50	45X2X30X21		3				160
MDFH77..	50H7	50h6	70	114	–	–	60 21 10	30	426 282 20	193 0	121	200
MDFV77..	$55^{+0.1}_{0}$	>62	4	$54.13^{0}_{-0.03}$	M16X50	50X2X30X24		3.2				200
MDFH87..	65H7	65h6	85	159	–	–	60 21 10	30	531 336 26	224 0	152	246.7
MDFV87..	$72^{+0.1}_{0}$	>82	4	$68.96^{0}_{-0.04}$	M20X60	65X2X30X31		4.5				250
MDFH97..	75H7	75h6	95	174	–	–	80 25 12	40	623 414 30	274 0	178	285
MDFV97..	$72^{+0.1}_{0}$	>90	4	$74.15^{0}_{-0.04}$	M20X60	70X2X30X34		5				300
MDFH107..	95H7	95h6	118	200	–	–	80 25 12	40	717 456 36	312 0	200	332.4
MDFV107..	$90^{+0.1}_{0}$	>105	6	$90.99^{0}_{-0.04}$	M20X60	85X3X30X27		6				350
MDFH127..	105H7	105h6	135	233	–	–	100 32 15	60 9	856 530 40	373 10	236	382.6 450
MDFH157..	120H7	120h6	155	275	–	–	120 32 15	60 9	1021 660 45	455 15	286	447 550

MDFV..B.. Wielowypusty wykonane są zgodnie z DIN. Na życzenie mogą być wykonane w GB lub ISO.
MDFV..B.. Splined shaft is according to DIN standard. If you need GB or ISO standard, please contact us.

MDFAZ27..~MDFAZ157..

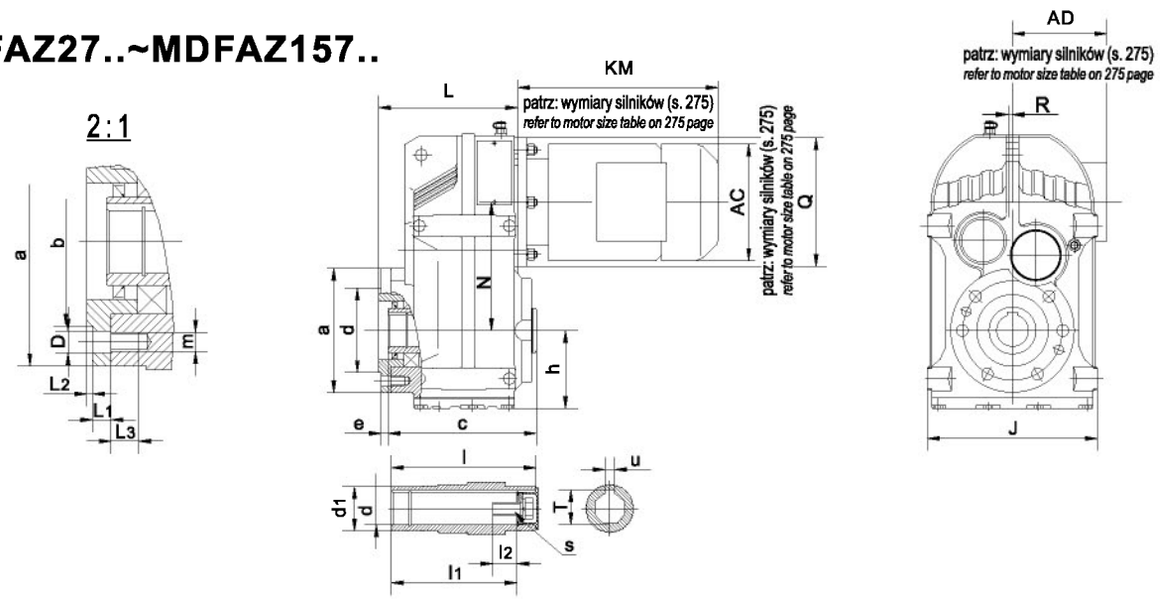

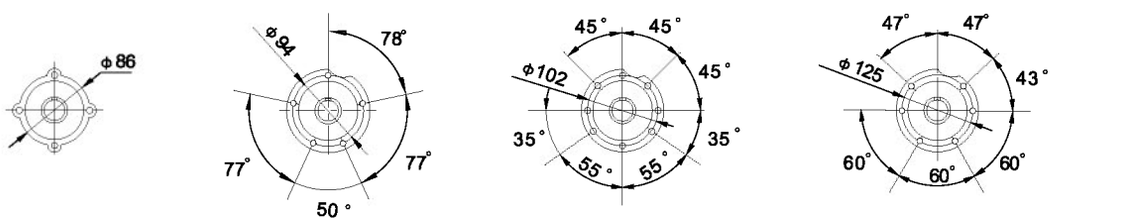

MDF..Z27.. MDF..Z37.. MDF..Z47.. MDF..Z57..~MDF..Z67..

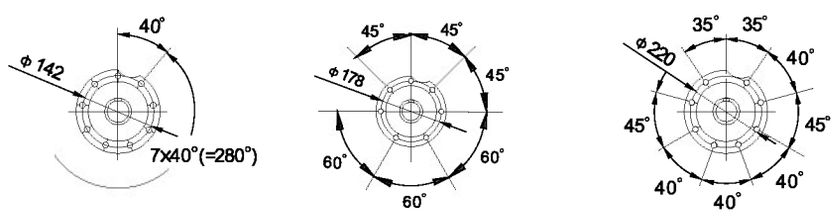

MDF..Z77.. MDF..Z87.. MDF..Z97..

MDFHZ27..~MDFHZ157..

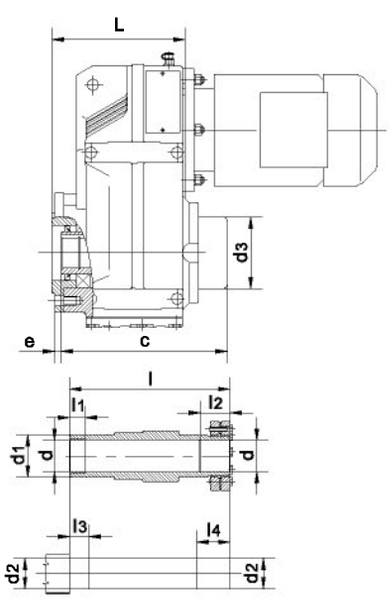

MDFVZ27..~MDFVZ107..

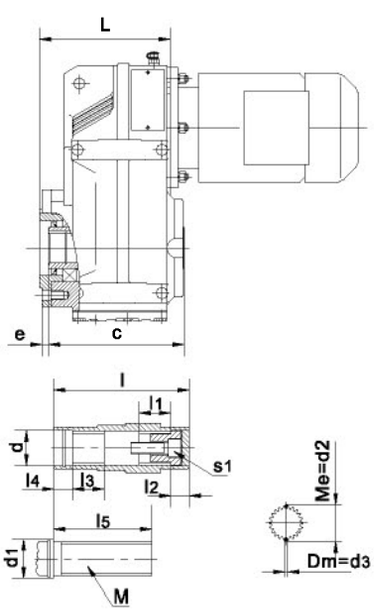

Wielkość *size*	a	b	e	h	D	L R	L_1	L_2	L_3	Q	m	J	N	c
MDFAZ27.. MDFHZ27.. MDFVZ27..	74	40k6	2	80	–	95 0	3	2	16	120	M8	150	98.7	107 131 104
MDFAZ37.. MDFHZ37.. MDFVZ37..	110	80j6	9	76	9	122 0	11.5	3	11	120	M8	165	112	123 155 122
MDFAZ47.. MDFHZ47.. MDFVZ47..	120	80j6	8	77	9	144 0	11	3	11	120	M8	180	128.1	153 184 152
MDFAZ57.. MDFHZ57.. MDFVZ57..	155	105j6	9	93	13.5	162 0	12	3.5	17	160	M12	200	136	170 200 168
MDFAZ67.. MDFHZ67.. MDFVZ67..	155	105j6	8.5	97	13.5	173 0	12	3.5	17	160	M12	212	159.5	184 215.5 180
MDFAZ77.. MDFHZ77.. MDFVZ77..	170	125j6	10	121	13.5	206 0	14	3.5	17	200	M12	270	200	213 249 210
MDFAZ87.. MDFHZ87.. MDFVZ87..	215	155j6	11	152	17.5	239 0	15	4	26	250	M16	330	246.7	243 291 240
MDFAZ97.. MDFHZ97.. MDFVZ97..	260	180j6	14	178	17.5	292 0	18	4	26	300	M16	400	285	303 357 300
MDFAZ107.. MDFHZ107.. MDFVZ107..	304	210j6	8	200	22	312 0	22	4	28	350	M20	450	332.4	353 420 353
MDFAZ127.. MDFHZ127..	350	250j6	5	236	22	377.5 10	30	5	28	450	M20	530	382.6	413 502
MDFAZ157.. MDFHZ157..	400	290j6	14	286	26	455 15	28	5	36	550	M24	660	447	503 598

Wielkość *size*	l	L_1	L_2	L_3	L_4	L_5	d	d_1	d_2	d_3	U	T	S	S_1	M
MDFAZ27..	104	89	17	–	–	–	25H7	40	–	–	8	28.3	M10X25	–	–
MDFHZ27..	126	20	25	25	30	–	25H7	40	25h6	58	–	–	–	–	–
MDFVZ27..	104	22	17	22	17	72	$32^{+0.1}_{0}$	≥36	$28.05^{0}_{-0.03}$	2.25	–	–	–	M10X30	25X1.25X30X18
MDFAZ37..	120	105	17	–	–	–	30H7	45	–	–	8	33.3	M10X25	–	–
MDFHZ37..	146	20	31	25	36	–	30H7	45	30h6	75	–	–	–	–	–
MDFVZ37..	120	25	18	25	18	85	$37^{+0.1}_{0}$	>42	$33.03^{0}_{-0.03}$	2.25	–	–	–	M10X30	30X1.25X30X22
MDFAZ47..	150	132	22	–	–	–	35H7	50	–	–	10	38.3	M10X25	–	–
MDFHZ47..	177	20	32	25	37	–	35H7	50	35h6	83	–	–	–	–	–
MDFVZ47..	150	32	18	32	18	115	$37^{+0.1}_{0}$	>42	$38.92^{0}_{-0.03}$	4	–	–	–	M10X30	35X2X30X16
MDFAZ57..	166	142	29	–	–	–	40H7	55	–	–	12	43.3	M16X40	–	–
MDFHZ57..	195	20	26	25	31	–	40H7	55	40h6	83	–	–	–	–	–
MDFVZ57..	166	32	18	32	18	130	$37^{+0.1}_{0}$	>42	$38.92^{0}_{-0.03}$	4	–	–	–	M10X30	35X2X30X16
MDFAZ67..	180	156	29	–	–	–	40H7	55	–	–	12	43.3	M16X40	–	–
MDFHZ67..	208	20	38	25	43	–	40H7	55	40h6	93	–	–	–	–	–
MDFVZ67..	180	42	25	42	25	130	$47^{+0.1}_{0}$	>52	$48.85^{0}_{-0.03}$	4	–	–	–	M16X50	45X2X30X21
MDFAZ77..	210	183	32	–	–	–	50H7	70	–	–	14	53.8	M16X45	–	–
MDFHZ77..	241	30	36	35	41	–	50H7	70	50h6	114	–	–	–	–	–
MDFVZ77..	210	52	23	52	23	160	$55^{+0.1}_{0}$	>62	$54.13^{0}_{-0.03}$	4	–	–	–	M16X50	50X2X30X24
MDFAZ87..	240	210	36	–	–	–	60H7	85	–	–	18	64.4	M20X50	–	–
MDFHZ87..	281	40	41	45	46	–	65H7	85	65h6	159	–	–	–	–	–
MDFVZ87..	240	62	25	62	25	180	$72^{+0.1}_{0}$	>82	$68.96^{0}_{-0.04}$	4	–	–	–	M20X60	65X2X30X31
MDFAZ97..	300	270	34	–	–	–	70H7	95	–	–	20	74.9	M20X50	–	–
MDFHZ97..	345	50	55	55	60	–	75H7	95	75h6	174	–	–	–	–	–
MDFVZ97..	300	72	25	72	25	240	$72^{+0.1}_{0}$	>90	$74.15^{0}_{-0.04}$	4	–	–	–	M20X60	70X2X30X34
MDFAZ107..	350	313	40	–	–	–	90H7	118	–	–	25	95.4	M24X60	–	–
MDFHZ107..	405	60	65	70	75	–	95H7	118	95h6	200	–	–	–	–	–
MDFVZ107..	350	89	26	89	26	290	$90^{+0.1}_{0}$	>105	$90.99^{0}_{-0.04}$	6	–	–	–	M24X60	85X3X30X27
MDFAZ127..	410	373	38	–	–	–	100H7	135	–	–	28	106.4	M24X60	–	–
MDFHZ127..	485	70	85	80	95	–	105H7	135	105h6	233	–	–	–	M24X60	–
MDFAZ157..	500	460	36	–	–	–	120H7	155	–	–	32	47.4	M24X60	–	–
MDFHZ157..	580	80	80	90	100	–	125H7	155	125h6	275	–	–	–	M24X60	–

MDFVZ.. Wielowypusty wykonane są zgodnie z DIN. Na życzenie mogą być wykonane w GB lub ISO.
MDFVZ.. Splined shaft is according to DIN standard. If you need GB or ISO standard, please contact us.

MDF167..

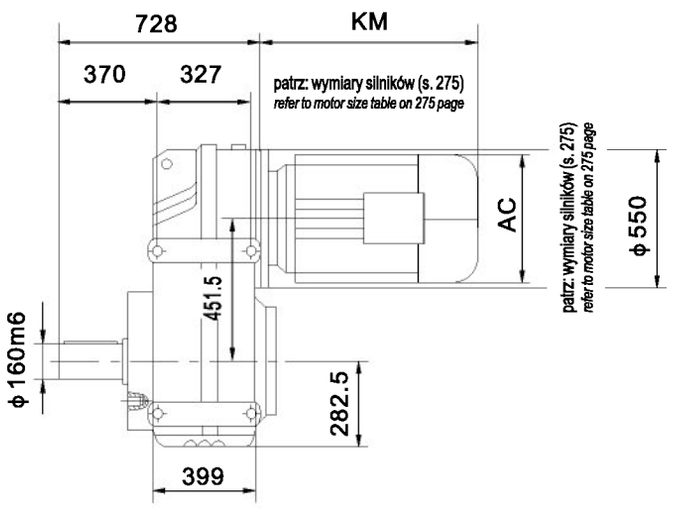

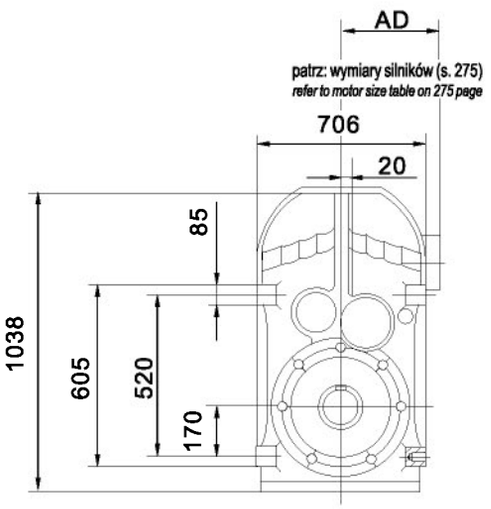

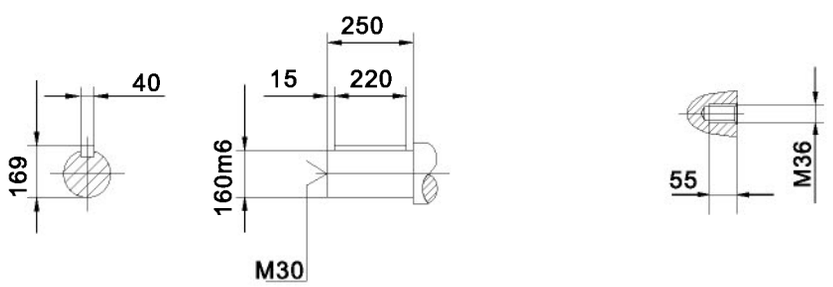

MDFH167..

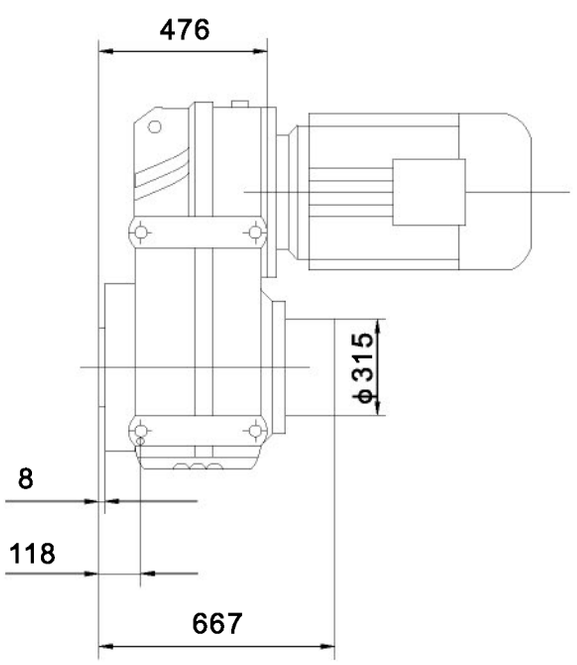

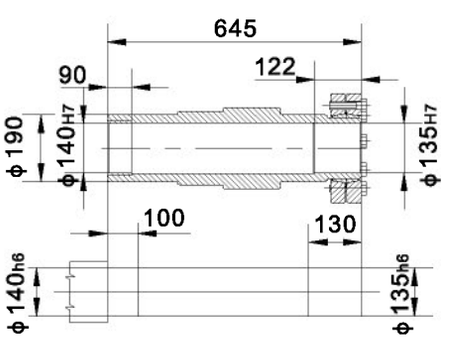

Na życzenie możliwa inna instalacja.
If you need other installation, please contact us.

MDF177..

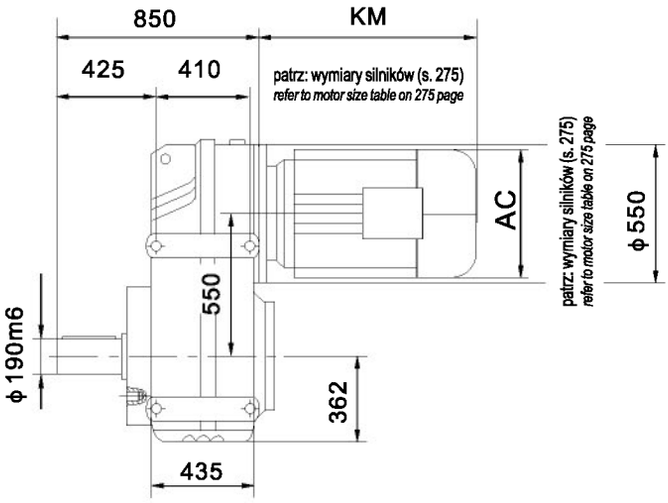

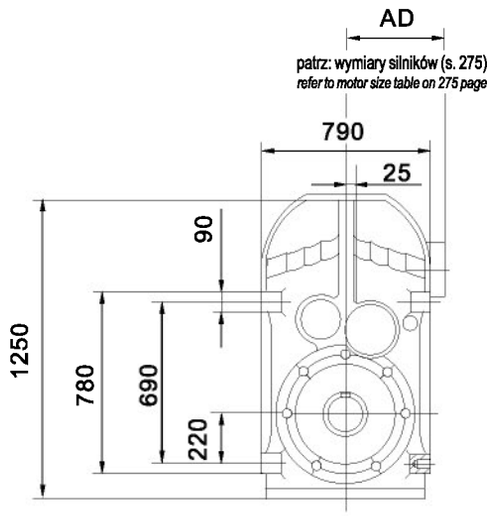

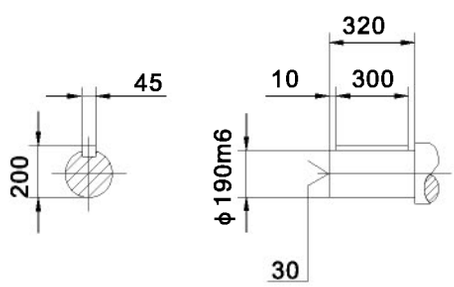

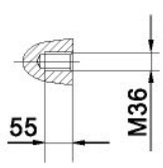

MDFH177..

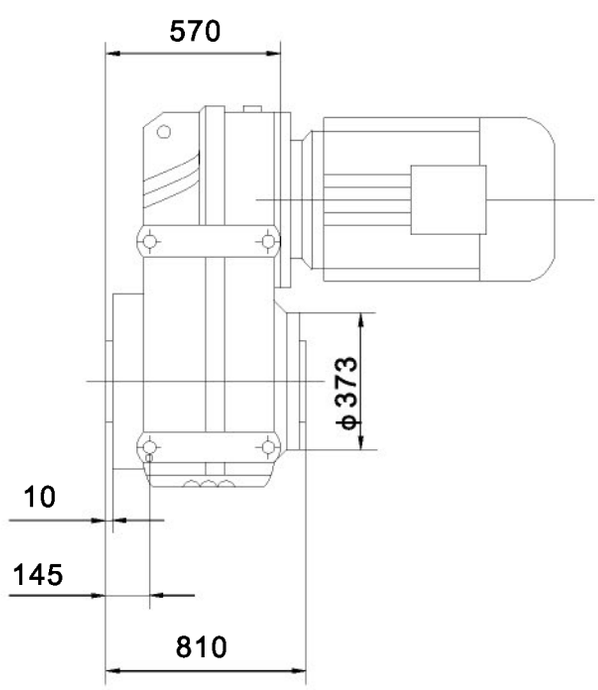

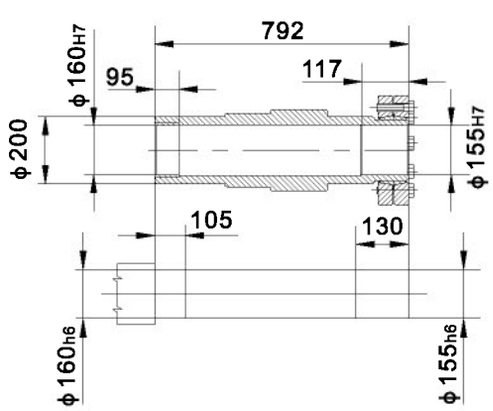

Na życzenie możliwa inna instalacja.
If you need other installation, please contact us.

MDF..AD..

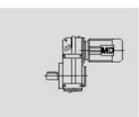

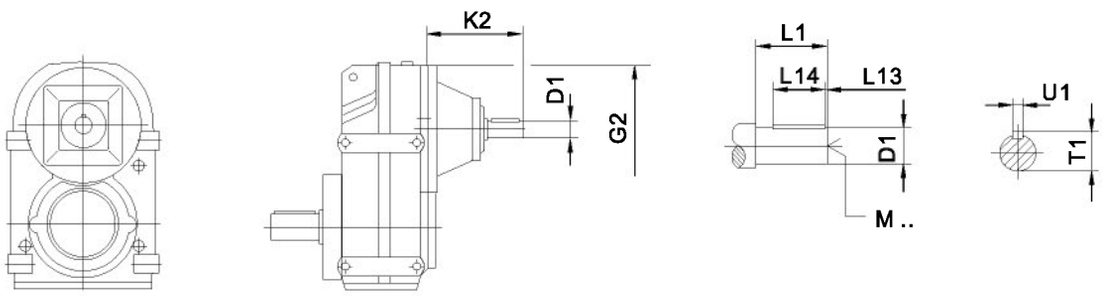

Wielkość *(size)*		G2	K2	D1	L1	L13	L14	T1	U1	M
MDF..27 MDF..37 MDF..47	AD1	120	102	16 k6	40	4	32	18	5	M5
	AD2		130	19 k6	40	4	32	21.5	6	M6
MDF..57 MDF..67	AD2	160	123	19 k6	40	4	32	21.5	6	M6
	AD3		159	24 k6	50	5	40	27	8	M8
MDF..77	AD2	200	116	19 k6	40	4	32	21.5	6	M6
	AD3		151	24 k6	50	5	40	27	8	M8
	AD4		224	38 k6	80	5	70	41	10	M12
MDF..87	AD2	250	111	19 k6	40	4	32	21.5	6	M6
	AD3		156	28 k6	60	5	50	31	8	M10
	AD4		219	38 k6	80	5	70	41	10	M12
	AD5		292	42 k6	110	10	70	45	12	M16
MDF..97	AD3	300	151	28 k6	60	5	50	31	8	M10
	AD4		214	38 k6	80	5	70	41	10	M12
	AD5		287	42 k6	110	10	70	45	12	M16
	AD6		327	48 k6	110	10	80	51.5	14	M16
MDF..107	AD3	350	145	28 k6	60	5	50	31	8	M10
	AD4		208	38 k6	80	5	70	41	10	M12
	AD5		281	42 k6	110	10	70	45	12	M16
	AD6		321	48 k6	110	10	80	51.5	14	M16
MDF..127	AD4	450	193	38 k6	80	5	70	41	10	M12
	AD5		266	42 k6	110	10	70	45	12	M16
	AD6		306	48 k6	110	10	80	51.5	14	M16
	AD7		300	55 m6	110	10	90	59	16	M20
	AD8		383	70 m6	140	15	110	74.5	20	M20
MDF..157 MDF..167	AD5	550	258	42 k6	110	10	70	45	12	M16
	AD6		298	48 k6	110	10	80	51.5	14	M16
	AD7		292	55 m6	110	10	90	59	16	M20
	AD8		374	70 m6	140	15	110	74.5	20	M20

MDF..AM..

Flg.1

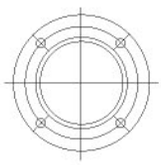

Flg.2

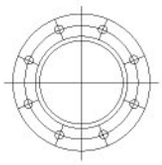

Form. 1

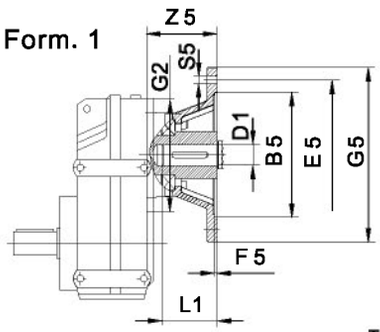

Form. 2

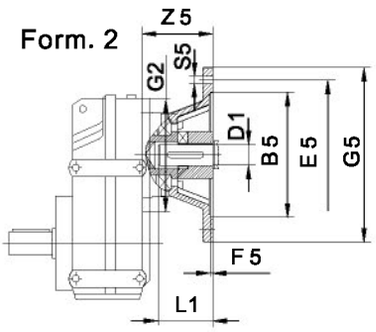

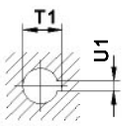

Wielkość *size*	IEC B5	Flg	Form	B5	E5	F5	G2	G5	S5	Z5	D1	L1	T1	U1
MDF..37 MDF..47	AM63	1	1	95G7	115	4.5	120	140	M8	72	11F7	23	12.8	4
	AM71[1)]			110G7	130			160		92.5	14F7	30	16.3	5
	AM80[1)]			130G7	165			200	M10	118	19F7	40	21.8	6
	AM90[1)]										24F7	50	27.3	8
MDF..57 MDF..67	AM63	1	1	95G7	115	4.5	160	140	M8	66	11F7	23	12.8	4
	AM71			110G7	130			160		87	14F7	30	16.3	5
	AM80			130G7	165			200	M10	113	19F7	40	21.8	6
	AM90										24F7	50	27.3	8
	AM100[1)]		2	180G7	215	5		250	M12	144	28H7	60	31.3	8
	AM112[1)]													
	AM132			230G7	265			300		177	38H7	80	41.3	10
MDF..77	AM63[1)]	1	1	95G7	115	4.5	200	140	M8	60	11F7	23	12.8	4
	AM71			110G7	130			160		79	14F7	30	16.3	5
	AM80			130G7	165			200	M10	105	19F7	40	21.8	6
	AM90										24F7	50	27.3	8
	AM100[1)]		2	180G7	215	5		250	M12	136	28H7	60	31.3	8
	AM112[1)]													
	AM132S[1)]			230G7	265			300		196	38H7	80	41.3	10
	AM132M[1)]													
	AM132ML[1)]													
MDF..87	AM80	1	1	130G7	165	4.5	250	200	M10	100	19F7	40	21.8	6
	AM90										24F7	50	27.3	8
	AM100		2	180G7	215	5		250	M12	131	28H7	60	31.3	8
	AM112													
	AM132S			230G7	265			300		191	38H7	80	41.3	10
	AM132M													
	AM132ML													
	AM160[1)]			250G7	300	6		350	M16	236	42H7	110	45.3	12
	AM180[1)]										48H7		51.8	14
MDF..97	AM100	1	2	180G7	215	5	300	250	M12	126	28H7	60	31.3	8
	AM112													
	AM132S			230G7	265			300		186	38H7	80	41.3	10
	AM132M													
	AM132ML													
	AM160			250G7	300	6		350	M16	231	42H7	110	45.3	12
	AM180										48H7		51.8	14
	AM200		1	300G7	350	7		400		268	55F7		59.3	16
	AM225[1)]	2	2	350G7	400	6		450		303	60H7	140	64.4	18

1) Obrys zewnętrzny kołnierza może wystawać poza płaszczyznę montażu łap (porównać średnicę kołnierza ze wzniosem wału).
Dimension G5/2 may protrude past foot mounting surface if mounted on a foot-mounted gear unit, please check.

MDF..AM..

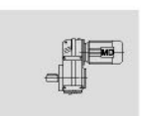

Flg.1

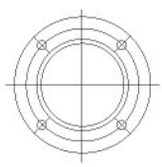

Flg.2

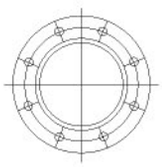

Form. 1

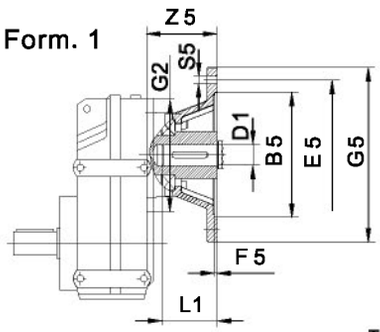

Form. 2

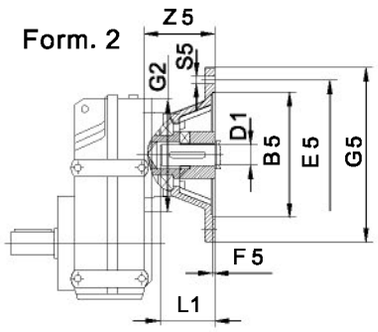

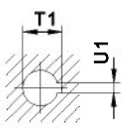

Wielkość (size)	IEC B5	Flg	Form	B5	E5	F5	G2	G5	S5	Z5	D1	L1	T1	U1
MDF..107	AM100		2	180G7	215	5	350	250	M12	120	28H7	60	31.3	8
	AM112													
	AM132S			230G7	265			300		180	38H7	80	41.3	10
	AM132M													
	AM132ML													
	AM160			250G7	300	6		350	M16	225	42H7	110	45.3	12
	AM180										48H7		51.8	14
	AM200		1	300G7	350	7		400		262	55F7		59.3	16
	AM225		2	350G7	400	6		450		297	60H7	140	64.4	18
MDF..127	AM132S		2	230G7	265	5	450	300	M12	165	38H7	80	41.3	10
	AM132M													
	AM132ML													
	AM160			250G7	300	6		350	M16	210	42H7	110	45.3	12
	AM180										48H7		51.8	14
	AM200		1	300G7	350	7		400		247	55F7.		59.3	16
	AM225		2	350G7	400	6		450		282	60H7	140	64.4	18
	AM250			450G7	500	7		550		336	65H7		69.4	
	AM280										75H7		79.9	20
MDF..157	AM132		2	230G7	265	5	550	300	M12	165	38H7	80	41.3	10
	AM160			250G7	300	6		350	M16	202	42H7	110	45.3	12
	AM180										48H7		51.8	14
	AM200		1	300G7	350	7		400		239	55F7		59.3	16
	AM225		2	350G7	400	6		450		274	60H7	140	64.4	18
	AM250			450G7	500	7		550		328	65H7		69.4	
	AM280										75H7		79.9	20

MDF..R..

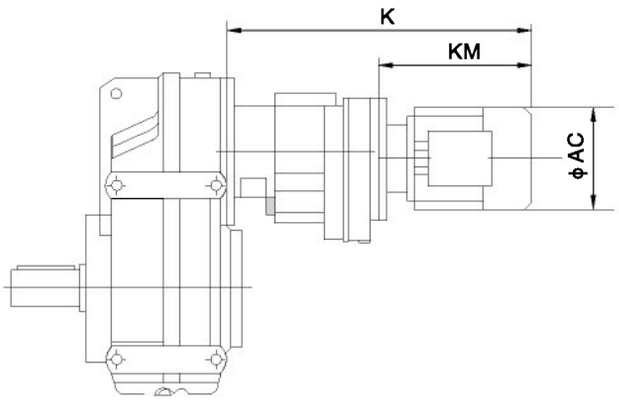

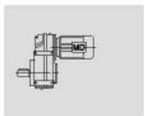

Wielkość *(size)*	Wielk. silnika *motor size*	AC	K	KM
MDF..37R17 MDF..47R17	DS63	120	373	198
	DS71	135	404	229
	DS80	156	444	269
MDF..57R37	DS63	120	363	198
	DS71	135	394	229
	DS80	156	434	269
MDF..67R37	DS63	120	363	198
	DS71	135	394	229
	DS80	156	434	269
	DS90	175	456	291
MDF..77R37	DS63	120	355	198
	DS71	135	386	229
	DS80	156	426	269
	DS90	175	448	291
MDF..87R57	DS63	120	408	192
	DS71	135	438	222
	DS80	156	478	262
	DS90	175	500	284
	DS100M	189	560	344
MDF..97R57	DS63	120	403	192
	DS71	135	433	222
	DS80	156	473	262
	DS90	175	495	284
	DS100M	189	555	344
	DS112M	221	603	392
MDF..107R77	DS63	120	433	186
	DS71	135	462	215
	DS80	156	502	255
	DS90	175	524	277
	DS100M	189	584	337

Wielkość *(size)*	Wielk. silnika *motor size*	AC	K	KM
MDF..107R77	DS112M	221	628	383
	DS132S	221	628	383
	DS132M	221	678	433
	DS160	271	718	471
MDF..127R77	DS63	120	418	186
	DS71	135	447	215
	DS80	156	487	255
	DS90	175	509	277
	DS100M	189	569	337
	DS112M	221	613	383
	DS132S	221	613	383
	DS132M	221	663	433
	DS160	271	703	471
MDF..127R87	DS80	156	530	250
	DS90	175	552	272
	DS100M	189	612	332
	DS112M	221	656	378
	DS132S	221	656	378
	DS132M	221	706	428
	DS160	271	746	466
	DS180M	380	897	617
	DS180L	420	945	665
MDF..157R97	DS90	175	592	267
	DS100M	189	652	327
	DS112M	221	696	373
	DS132S	221	696	373
	DS132M	221	746	423
	DS160	271	786	461
	DS180M	380	937	612
	DS180L	420	985	660
	DS200L	470	991	666

Uwaga: Wymiary silnika podane w tabeli są tylko orientacyjne i zależą od dokładnego typu silnika.
Please note that the dimension of motor in the above table is only for reference. If you have special requirements, please contact us.

Notatki / *notes*

7. **Seria MDK** - przekładnie walcowo-stożkowe
*7. **MDK series** - helical-bevel gearmotors*

7.1. Wersje przekładni
7.1. Versions of gearmotors

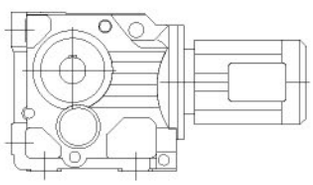
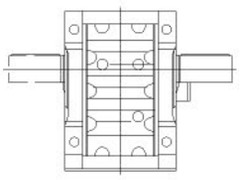

MDK..D..

Wał wyjściowy z wpustem, montaż łapowy
Output shaft with key, foot-mounted

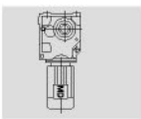

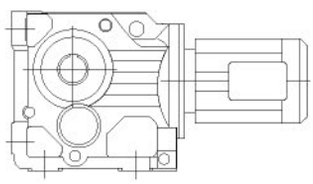
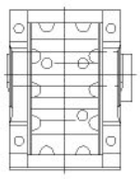

MDKA..B D..

Wał drążony z rowkiem wpustowym, montaż łapowy
Hollow shaft with key, foot-mounted

MDKV..B D..

Wał drążony z wielowypustem, montaż łapowy
Splined hollow shaft, foot-mounted

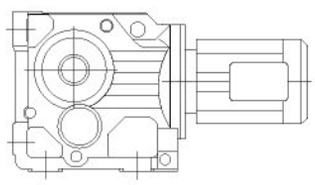
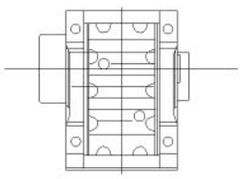

MDKH..B D..

Wał drążony z pierścieniem zaciskowym, montaż łapowy
Hollow shaft with shrink disk, foot-mounted

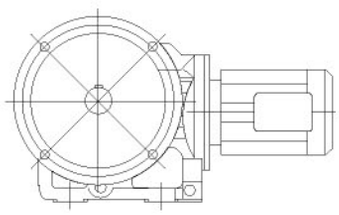
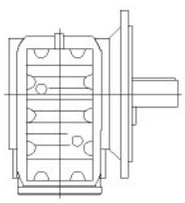

MDKF..D..

Wał wyjściowy z wpustem, montaż kołnierzowy B5
Output shaft with key, B5 flange-mounted

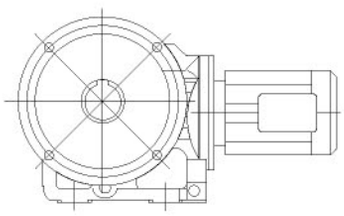
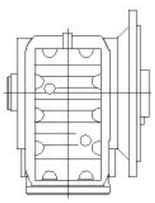

MDKAF..D..

Wał drążony z rowkiem wpustowym, montaż kołnierzowy B5
Hollow shaft with key, B5 flange-mounted

MDKVF..D..

Wał drążony z wielowypustem, montaż kołnierzowy B5
Splined hollow shaft, B5 flange-mounted

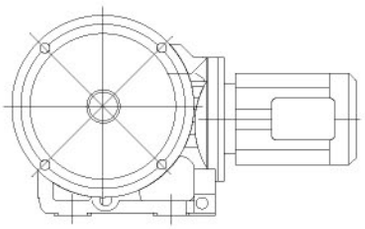

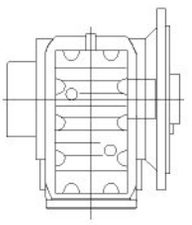

MDKHF..D..

Wał drążony z pierścieniem zaciskowym, montaż kołnierzowy B5
Hollow shaft with shrink disk, B5 flange-mounted

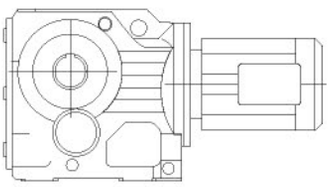

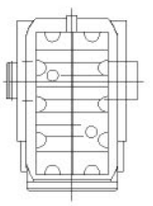

MDKA..D..

Wał drążony z rowkiem wpustowym
Hollow shaft with key

MDKV..D..

Wał drążony z wielowypustem
Splined hollow shaft

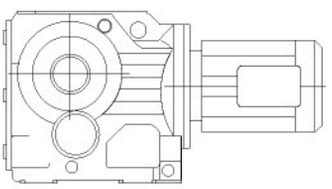

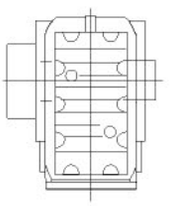

MDKH..D..

Wał drążony z pierścieniem zaciskowym
Hollow shaft with shrink disk

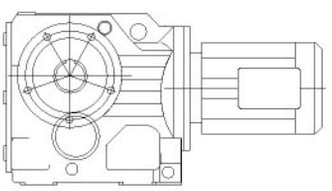

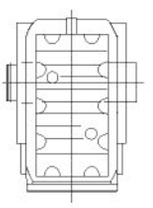

MDKAZ..D..

Wał drążony z rowkiem wpustowym, montaż kołnierzowy B14
Hollow shaft with key, B14 flange-mounted

MDKVZ..D..

Wał drążony z wielowypustem, montaż kołnierzowy B14
Splined hollow shaft, B14 flange-mounted

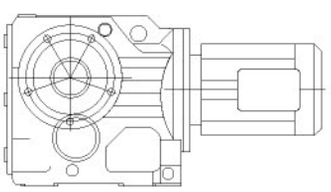

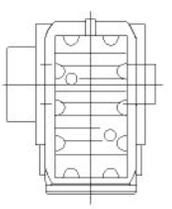

MDKHZ..D..

Wał drążony z pierścieniem zaciskowym, montaż kołnierzowy B14
Hollow shaft with shrink disk, B14 flange-mounted

7.2. Kombinacje

7.2. Type of combination

Możliwe kombinacje wielkości przełożenia i silnika.
A combination table in each ratio range between gearbox and electric motor.

Wielkość przekładni *Gear unit size*	II. stopni *Stages*	D63 D71	D80	D90	D100	D112	D132S	D132M
MDK/KF/KA/KAF37	3	3.98-106.38	3.98-83.69	3.98-24.99 29.96-72.54	3.98-10.49 13.08-20.19 29.96-58.60			
MDK/KF/KA/KAF47	3	7.36-11.77 13.65-31.30 39.61-131.87	4.64-104.37	4.64-90.86	4.64-21.81 25.91 35.39-63.30 75.20			
MDK/KF/KA/KAF57	3	9.59-11.92 19.34-35.70 48.89-145.14	7.55-11.92 15.22-123.85	4.69-108.29	4.69-90.26	4.69-30.28 38.49-76.56		
MDK/KF/KA/KAF67	3	10.63-12.48 19.30-35.62 48.77-144.79	8.37-12.48 15.19-123.54	5.2-108.03	5.2-90.04	5.2-30.22 38.39-76.37	5.2-24.00 38.39-60.66	5.2-24.00 38.39-60.66
MDK/KF/KA/KAF77	3	25.62-38.39 64.75-192.18	10.84-12.36 20.25-38.39 51.18-154.02	7.24-135.28	7.24-113.56	7.24-97.05	7.24-30.89 40.04-78.07	7.24-30.89 40.04-78.07
MDK/KF/KA/KAF87	3		16.00 27.88-31.39 70.46-197.37	11.17 16.00 19.45-31.39 49.16-174.19	8.29-11.17 14.45-147.32	8.29-11.17 14.45-126.91	7.21-102.71	7.21-102.71
MDK/KF/KA/KAF97	3			24.75-38.30 62.55-176.05	18.96-38.30 47.93-176.05	18.96-38.30 47.93-153.21	8.71-123.93	8.71-123.93
MDK/KF/KA/KAF107	3				13.43 22.62-29.00 32.69 57.17-143.47	13.43 22.62-29.00 32.69 57.17-143.47	8.69-29.00 32.69-143.47	8.69-29.00 32.69-143.47
MDK/KF/KA/KAF127	3							12.79 21.15-36.25 47.82-146.07

Wielkość przekładni *Gear unit size*	II. stopni *Stages*	D160S	D160M	D160L	D180	D200
MDK/KF/KA/KAF77	3	7.24-23.08 40.04-58.34	7.24-23.08 40.04-58.34			
MDK/KF/KA/KAF87	3	7.21-79.34	7.21-79.34	7.21-79.34	7.21-14.45 17.42-24.92 36.52-63.00	
MDK/KF/KA/KAF97	3	8.71-96.80	8.71-96.80	8.71-96.80	8.71-30.82 41.87-77.89	8.71-24.75 41.87-62.55
MDK/KF/KA/KAF107	3	8.69-112.41	8.69-112.41	8.69-112.41	8.69-90.96	8.69-31.28 37.00-73.30
MDK/KF/KA/KAF127	3	10.74-12.79 17.77-136.14	10.74-12.79 17.77-136.14	10.74-12.79 17.77-136.14	8.68-110.18	8.68-89.89
MDK/KF/KA/KAF157	3		18.37-31.30 46.79-150.41	18.37-31.30 46.79-150.41	14.92-122.39	12.65-100.22
MDK/KH167	3		24.52-32.25 51.77-164.50	24.52-32.25 51.77-164.50	20.32-32.25 42.89-134.99	17.34-109.83
MDK/KH187	3		33.23-42.51 88.00-179.86	33.23-42.51 88.00-179.86	27.92-42.51 73.96-179.86	17.18-179.86

Wielkość przekładni *Gear unit size*	II. stopni *Stages*	D225	D250M	D280	D315	D315M_A/B
MDK/KF/KA/KAF107	3	8.69-31.28 37.00-73.30				
MDK/KF/KA/KAF127	3	8.68-89.89	8.68-31.37 40.19-70.95	8.68-31.37 40.19-70.95		
MDK/KF/KA/KAF157	3	12.65-100.22	12.65-79.75	12.65-79.75	12.65-23.95 38.02-61.02	12.65-18.37 38.02-46.79
MDK/KH167	3	17.34-109.83	17.34-87.86	17.34-87.86	17.34-68.07	17.34-24.52 36.61-51.77
MDK/KH187	3	17.18-179.86	17.18-144.59	17.18-144.59	17.18-112.60	17.18-33.23 45.50-88.00

7.3. Przełożenia i momenty maksymalne

7.3. Ratio and max torque

MDK37-57 n_e=1400 1/min

MDK37			200Nm	
i	n_a [1/min]	M_{amax} [Nm]	F_{Ra} [N]	AD
106.38	13	200	5640	AD1
97.81	14	200	5640	
83.69	17	200	5640	
72.54	19	200	5520	
67.80	21	200	5360	
58.60	24	200	5020	
49.79	28	200	4660	
44.46	31	200	4420	
37.97	37	200	4100	
35.57	39	200	3970	
29.96	47	200	3650	AD2
28.83	49	200	3580	
24.99	56	200	3330	
23.36	60	195	3260	
20.19	69	185	3110	
17.15	82	180	2900	
15.31	91	175	2780	
13.08	107	165	2650	
12.14	115	160	2600	
10.49	133	160	2410	
8.91	157	160	2200	
7.96	176	155	2110	
6.80	206	150	1980	
6.37	220	145	1950	
5.36	261	140	1810	
3.98	352	125	1660	

MDK47			400Nm	
i	n_a [1/min]	M_{amax} [Nm]	F_{Ra} [N]	AD
131.87	11	400	5920	AD2
121.48	12	400	5920	
104.37	13	400	5920	
90.86	15	400	5920	
85.12	16	400	5920	
75.20	19	400	5920	
69.84	20	400	5920	
63.30	22	400	5920	
56.83	25	400	5920	
48.95	29	400	5920	
46.03	30	400	5920	
39.61	35	400	5920	
35.39	40	400	5920	
31.30	45	400	5700	
29.32	48	400	5520	
25.91	54	400	5170	
24.06	58	400	4970	
21.81	64	400	4710	
19.58	72	400	4440	
16.86	83	380	4230	
15.86	88	380	4080	
13.65	103	360	3890	
12.19	115	350	3720	
11.77	119	280	4060	
10.56	133	280	3830	
9.10	154	280	3540	
8.56	164	270	3500	AD3
7.36	190	250	3390	
6.58	213	240	3270	
5.81	241	230	3140	
4.64	302	205	2980	

MDK57			600Nm	
i	n_a [1/min]	M_{amax} [Nm]	F_{Ra} [N]	AD
145.14	9.6	600	7630	AD2
123.85	11	600	7630	
108.29	13	600	7630	
102.88	14	600	7630	
90.26	16	600	7630	
76.56	18	600	7630	
69.12	20	600	7630	
60.81	23	600	7630	
57.42	24	600	7630	
48.89	29	600	7630	
44.43	32	600	7630	
38.49	36	600	7630	
35.70	39	600	7630	
30.28	46	600	7310	
27.34	51	600	6930	
24.05	58	600	6480	
22.71	62	600	6280	
19.34	72	575	5910	
17.57	80	555	5740	
15.22	92	535	5430	AD3
13.25	106	510	5190	
11.92	117	415	5150	
11.26	124	415	4990	
9.59	146	405	4650	
8.71	161	390	4520	
7.55	185	365	4360	
6.57	213	345	4190	
4.69	299	300	3800	

MDK67-87 n_e=1400 1/min

MDK67			820Nm	
i	n_a [1/min]	M_{amax} [Nm]	F_{Ra} [N]	AD
144.79	9.7	820	10300	AD2
123.54	11	820	10300	
108.03	13	820	10300	
102.62	14	820	10300	
90.04	16	820	10300	
76.37	18	820	10300	
68.95	20	820	10300	
60.66	23	820	10300	
57.28	24	820	10300	
48.77	29	820	10300	
44.32	32	820	10300	
38.39	36	820	10300	
35.62	39	820	10300	
30.22	46	820	10300	AD3
27.28	51	820	10300	
24.00	58	800	1050	
22.66	62	780	10700	
19.30	73	760	10800	
17.54	80	740	11000	
15.19	92	700	11300	
13.22	106	670	11500	
12.48	112	530	12300	
10.63	132	500	1180	
9.66	145	480	11500	
8.37	167	440	11100	
7.28	192	420	10700	
5.20	269	350	9870	

MDK77			1550Nm	
i	n_a [1/min]	M_{amax} [Nm]	F_{Ra} [N]	AD
192.18	7.3	1450	16100	AD2
179.37	7.8	1450	16100	
154.02	9.1	1550	15400	
135.28	10	1550	15400	
128.52	11	1550	15400	
113.56	12	1550	15400	
97.05	14	1550	15400	
88.97	16	1550	15400	
78.07	18	1550	15400	
73.99	19	1550	15400	
64.75	22	1550	15400	
58.34	24	1550	15400	
51.18	27	1550	15400	
45.16	31	1550	15400	
40.04	35	1550	15400	AD3
38.39	36	1550	15400	
35.20	40	1550	15400	
30.89	45	1550	15400	
29.27	48	1550	15400	AD4
25.62	55	1550	15400	
23.08	61	1550	15400	
20.25	69	1550	15700	
17.87	78	1450	16100	
15.84	88	1400	15500	
13.52	104	1340	14800	
12.36	113	1000	15100	
10.84	129	990	14400	
9.56	146	940	13900	
8.48	165	890	13500	
7.24	193	820	13100	

MDK87			2700Nm	
i	n_a [1/min]	M_{amax} [Nm]	F_{Ra} [N]	AD
197.37	7.1	2700	27300	AD2
174.19	8.0	2700	27300	
164.34	8.5	2700	27300	
147.32	9.5	2700	27300	
126.91	11	2700	27300	
115.82	12	2700	27300	
102.71	14	2700	27300	
86.34	16	2700	27300	
79.34	18	2700	27300	AD3
70.46	20	2700	27300	
63.00	22	2700	26200	
56.64	25	2700	25000	
49.16	28	2700	23500	
44.02	32	2600	22800	
36.52	38	2500	21400	
31.39	45	2700	19200	AD4
27.88	50	2600	18500	
24.92	56	2500	18000	
22.41	62	2300	17900	
19.45	72	2300	16800	
17.42	80	2200	16300	
16.00	87	1800	16000	
14.45	97	2100	15300	
12.56	111	2000	14800	
11.17	125	1500	14900	
10.00	140	1500	14200	AD5
8.29	169	1400	13500	
7.21	194	1300	13200	

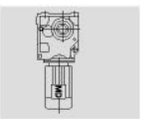

MDK97-127 n_e=1400 1/min

MDK97			4300Nm	
i	n_a [1/min]	M_{amax} [Nm]	F_{Ra} [N]	AD
176.05	8.0	4300	40000	AD3
153.21	9.1	4300	40000	
140.28	10	4300	40000	
123.93	11	4300	40000	
105.13	13	4300	40000	
96.80	14	4300	40000	
86.52	16	4300	38800	
77.89	18	4300	37100	
70.54	20	4300	35600	
62.55	22	4300	33800	AD4
56.55	25	4300	32300	
47.93	29	4300	30000	
41.87	33	4300	28300	
38.30	37	4300	27100	AD5
34.23	41	4300	25700	
30.82	45	4300	24500	
27.91	50	4300	23300	
24.75	57	4300	22000	
22.37	63	4300	20900	
18.96	74	4300	19100	
16.56	85	4300	17800	
13.85	101	4300	16100	AD6
11.99	117	3890	16200	
10.41	134	2870	16400	AD5
8.71	161	2660	15800	AD6

MDK107			8000Nm	
i	n_a [1/min]	M_{amax} [Nm]	F_{Ra} [N]	AD
143.47	9.8	8000	65000	AD4
121.46	12	8000	61700	
112.41	12	8000	59700	
100.75	14	8000	57000	
90.96	15	8000	54600	
82.61	17	8000	52400	
73.30	19	8000	49700	
66.52	21	8000	47600	
57.17	24	8000	44400	
49.90	28	7840	42200	
42.33	33	7360	40500	AD5
37.00	38	7200	38500	
32.69	43	7200	36300	
31.28	45	6800	36700	
29.00	48	7200	34000	AD6
26.32	53	7200	32000	
22.62	62	7200	28900	
19.74	71	7200	26100	
16.75	84	7050	23600	
14.64	96	6890	21900	
13.43	104	4300	29200	
11.73	119	4300	27500	
9.94	141	4190	25800	
8.69	161	4070	24600	

MDK127			13000Nm	
i	n_a [1/min]	M_{amax} [Nm]	F_{Ra} [N]	AD
146.07	9.6	13000	79200	AD4
136.14	10	13000	79200	
122.48	11	13000	79200	
110.18	13	13000	79200	
89.89	16	13000	75100	AD5
81.98	17	13000	72100	
70.95	20	13000	67700	
62.60	22	13000	64000	
54.07	26	13000	59900	
47.82	29	13000	56500	
40.19	35	13000	52000	AD6
36.25	39	13000	49400	AD7
31.37	45	13000	45900	
27.68	51	13000	43000	
23.91	59	13000	39800	
21.15	66	13000	37200	AD8
17.77	79	13000	33600	
14.35	98	12100	31800	
12.79	109	8530	35400	
10.74	130	8000	33900	
8.68	161	7230	32500	

MDK157-187, MDK37R17, MDK47/57R37 n_e=1400 1/min

MDK157 18000Nm

i	n_a [1/min]	M_{amax} [Nm]	F_{Ra} [N]	AD
150.41	9.3	18000	112200	AD5
122.39	11	18000	106500	
100.22	14	18000	98000	
91.65	15	18000	94400	
79.75	18	18000	88900	
70.38	20	18000	84200	
61.02	23	18000	79000	
54.29	26	18000	74900	AD6
46.79	30	18000	70000	AD7
38.02	37	18000	63300	
31.30	45	18000	57500	AD8
27.62	51	18000	54000	
23.95	58	18000	50000	
21.31	66	18000	47000	
18.37	76	18000	43200	
14.92	94	18000	38200	
12.65	111	17000	36700	

MDK167 32000Nm

i	n_a [1/min]	M_{amax} [Nm]	F_{Ra} [N]	AD
164.50	8.5	32000	150000	AD5
134.99	10	32000	150000	AD6
109.83	13	32000	150000	
87.86	16	32000	147200	AD7
78.14	18	32000	140100	
68.07	21	32000	132000	
60.74	23	32000	125600	
51.77	27	32000	117000	AD8
42.89	33	32000	107400	
36.61	38	32000	99700	
32.25	43	32000	93700	
28.77	49	32000	88600	
24.52	57	32000	81700	
20.32	69	32000	74000	
17.34	81	32000	67900	

MDK187 50000Nm

i	n_a [1/min]	M_{amax} [Nm]	F_{Ra} [N]	AD
179.86	7.8	50000	189900	AD6
165.21	8.5	50000	189900	
144.59	9.7	50000	189900	
129.69	11	50000	188200	AD7
112.60	12	50000	177200	
102.16	14	50000	169900	
88.00	16	50000	159000	AD8
73.96	19	50000	147000	
64.04	22	50000	137500	
53.36	26	50000	126100	
45.50	31	50000	116600	
42.51	33	50000	112700	
38.57	36	50000	107200	
33.23	42	50000	99100	
27.92	50	50000	90200	
24.18	58	47600	86800	
20.15	69	43900	84000	
17.18	81	41400	80800	

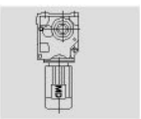

MDK37R17 200Nm

i	n_a [1/min]	Stopień *Stage* K37	R17	M_{amax} [Nm]	F_{Ra} [N]
6832	0.20	3	3	200	5640
5922	0.24	3	3	200	5640
5491	0.25	3	3	200	5640
4759	0.29	3	3	200	5640
4160	0.34	3	3	200	5640
3645	0.38	3	3	200	5640
3205	0.44	3	3	200	5640
2801	0.50	3	3	200	5640
2454	0.57	3	3	200	5640
2166	0.65	3	3	200	5640
1891	0.74	3	3	200	5640
1660	0.84	3	3	200	5640
1466	0.95	3	3	200	5640
1288	1.1	3	3	200	5640
1136	1.2	3	3	200	5640
996	1.4	3	2	200	5640
876	1.6	3	2	200	5640
761	1.8	3	2	200	5640
671	2.1	3	2	200	5640
585	2.4	3	2	200	5640
512	2.7	3	2	200	5640
451	3.1	3	2	200	5640
396	3.5	3	2	200	5640
346	4.0	3	2	200	5640
304	4.6	3	2	200	5640
267	5.2	3	2	200	5640
234	6.0	3	2	200	5640
205	6.8	3	2	200	5640
181	7.7	3	2	200	5640
160	8.8	3	2	200	5640
136	10	3	2	200	5640
127	11	3	2	200	5640
110	13	3	2	200	5640
96	15	3	2	200	5640

MDK47R37 400Nm

i	n_a [1/min]	Stopień *Stage* K47	R37	M_{amax} [Nm]	F_{Ra} [N]
10138	0.14	3	3	400	5920
8534	0.16	3	3	400	5920
7662	0.18	3	3	400	5920
6826	0.21	3	3	400	5920
5983	0.23	3	3	400	5920
5159	0.27	3	3	400	5920
4601	0.30	3	3	400	5920
3940	0.36	3	3	400	5920
3477	0.40	3	3	400	5920
3043	0.46	3	3	400	5920
2733	0.51	3	3	400	5920
2354	0.59	3	3	400	5920
2063	0.68	3	3	400	5920
1819	0.77	3	3	400	5920
1586	0.88	3	3	400	5920
1388	1.0	3	3	400	5920
1222	1.1	3	2	400	5920
1097	1.3	3	2	400	5920
945	1.5	3	2	400	5920
831	1.7	3	2	400	5920
718	1.9	3	2	400	5920
639	2.2	3	2	400	5920
552	2.5	3	2	400	5920
495	2.8	3	2	400	5920
426	3.3	3	2	400	5920
375	3.7	3	2	400	5920
327	4.3	3	2	400	5920
289	4.8	3	2	400	5920
256	5.5	3	2	400	5920
225	6.2	3	2	400	5920
198	7.1	3	2	400	5920
171	8.2	3	2	400	5920
153	9.2	3	2	400	5920
131	11	3	2	400	5920
112	13	3	2	400	5920
99	14	3	2	400	5920
94	15	3	2	400	5920

MDK57R37 600Nm

i	n_a [1/min]	Stopień *Stage* K57	R37	M_{amax} [Nm]	F_{Ra} [N]
12169	0.12	3	3	600	7630
11162	0.13	3	3	600	7630
9503	0.15	3	3	600	7630
8547	0.16	3	3	600	7630
7277	0.19	3	3	600	7630
6478	0.22	3	3	600	7630
5662	0.25	3	3	600	7630
5033	0.28	3	3	600	7630
4340	0.32	3	3	600	7630
3854	0.36	3	3	600	7630
3390	0.41	3	3	600	7630
2924	0.48	3	3	600	7630
2593	0.54	3	3	600	7630
2249	0.62	3	3	600	7630
1986	0.70	3	3	600	7630
1743	0.80	3	2	600	7630
1539	0.91	3	2	600	7630
1354	1.0	3	2	600	7630
1174	1.2	3	2	600	7630
1036	1.4	3	2	600	7630
906	1.5	3	2	600	7630
806	1.7	3	2	600	7630
699	2.0	3	2	600	7630
615	2.3	3	2	600	7630
544	2.6	3	2	600	7630
473	3.0	3	2	600	7630
421	3.3	3	2	600	7630
362	3.9	3	2	600	7630
319	4.4	3	2	600	7630
280	5.0	3	2	600	7630
246	5.7	3	2	600	7630
215	6.5	3	2	600	7630
192	7.3	3	2	600	7630
166	8.4	3	2	600	7630
145	9.7	3	2	600	7630
129	11	3	2	600	7630
111	13	3	2	600	7630
97	14	3	2	600	7630

MDK67/77R37, MDK87R57

n_e=1400 1/min

MDK67R37				820Nm	
i	n_a [1/min]	Stopień *Stage* K67	R37	M_{amax} [Nm]	F_{Ra} [N]
12139	0.12	3	3	820	10300
11134	0.13	3	3	820	10300
9479	0.15	3	3	820	10300
8173	0.17	3	3	820	10300
7259	0.19	3	3	820	10300
6462	0.22	3	3	820	10300
5648	0.25	3	3	820	10300
4846	0.29	3	3	820	10300
4329	0.32	3	3	820	10300
3750	0.37	3	3	820	10300
3315	0.42	3	3	820	10300
2917	0.48	3	3	820	10300
2532	0.55	3	3	820	10300
2244	0.62	3	3	820	10300
1981	0.71	3	3	820	10300
1739	0.81	3	2	820	10300
1535	0.91	3	2	820	10300
1351	1.0	3	2	820	10300
1171	1.2	3	2	820	10300
1034	1.4	3	2	820	10300
903	1.6	3	2	820	10300
793	1.8	3	2	820	10300
697	2.0	3	2	820	10300
613	2.3	3	2	820	10300
542	2.6	3	2	820	10300
471	3.0	3	2	820	10300
420	3.3	3	2	820	10300
361	3.9	3	2	820	10300
323	4.3	3	2	820	10300
279	5.0	3	2	820	10300
246	5.7	3	2	820	10300
217	6.5	3	2	820	10300
191	7.3	3	2	820	10300
166	8.4	3	2	820	10300
144	9.7	3	2	820	10300
122	11	3	2	820	10300

MDK77R37				1550Nm	
i	n_a [1/min]	Stopień *Stage* K77	R37	M_{amax} [Nm]	F_{Ra} [N]
15310	0.09	3	3	1550	15400
14043	0.10	3	3	1550	15400
11955	0.12	3	3	1550	15400
10217	0.14	3	3	1550	15400
8809	0.16	3	3	1550	15400
7528	0.19	3	3	1500	15400
6606	0.21	3	3	1550	15400
5774	0.24	3	3	1550	15400
5089	0.28	3	3	1550	15400
4489	0.31	3	3	1550	15400
3961	0.35	3	3	1550	15400
3485	0.40	3	3	1500	15400
2901	0.48	3	3	1550	15400
2717	0.52	3	3	1550	15400
2370	0.59	3	3	1550	15400
2050	0.68	3	2	1550	15400
1772	0.79	3	2	1550	15400
1514	0.92	3	2	1500	15400
1388	1.0	3	2	1550	15400
1218	1.1	3	2	1550	15400
1053	1.3	3	2	1550	15400
924	1.5	3	2	1550	15400
815	1.7	3	2	1550	15400
709	2.0	3	2	1500	15400
622	2.3	3	2	1550	15400
552	2.5	3	2	1550	15400
485	2.9	3	2	1550	15400
428	3.3	3	2	1550	15400
367	3.8	3	2	1550	15400
328	4.3	3	2	1500	15400
290	4.8	3	2	1550	15400
252	5.6	3	2	1550	15400
221	6.3	3	2	1550	15400
195	7.2	3	2	1550	15400
175	8.0	3	2	1550	15400
154	9.1	3	2	1550	15400

MDK87R57				2700Nm	
i	n_a [1/min]	Stopień *Stage* K87	R57	M_{amax} [Nm]	F_{Ra} [N]
14829	0.09	3	3	2700	27300
13168	0.11	3	3	2700	27300
11737	0.12	3	3	2700	27300
10217	0.14	3	3	2700	27300
9073	0.15	3	3	2700	27300
7854	0.18	3	3	2700	27300
6832	0.20	3	3	2700	27300
5930	0.24	3	3	2700	27300
5240	0.27	3	3	2700	27300
4562	0.31	3	3	2700	27300
4037	0.35	3	3	2700	27300
3609	0.39	3	3	2700	27300
3107	0.45	3	3	2700	27300
2728	0.51	3	3	2700	27300
2371	0.59	3	3	2700	27300
2088	0.67	3	2	2700	27300
1854	0.76	3	2	2700	27300
1657	0.84	3	2	2700	27300
1415	0.99	3	2	2700	27300
1229	1.1	3	2	2700	27300
1078	1.3	3	2	2700	27300
951	1.5	3	2	2700	27300
837	1.7	3	2	2700	27300
726	1.9	3	2	2700	27300
628	2.2	3	2	2700	27300
562	2.5	3	2	2700	27300
474	3.0	3	2	2700	27300
426	3.3	3	2	2700	27300
373	3.8	3	2	2700	27300
330	4.2	3	2	2700	27300
294	4.8	3	2	2700	27300
250	5.6	3	2	2700	27300
236	5.9	3	2	2700	27300
201	7.0	3	2	2700	27300
183	7.7	3	2	2700	27300
159	8.8	3	2	2700	27300
141	9.9	3	2	2700	27400

MDK97R57, MDK107/127R77 n_e=1400 1/min

MDK97R57				4300Nm	
i	n_a [1/min]	Stopień *Stage* K97	R57	M_{amax} [Nm]	F_{Ra} [N]
18091	0.08	3	3	4300	40000
16666	0.08	3	3	4300	40000
14897	0.09	3	3	4300	40000
13182	0.11	3	3	4300	40000
11677	0.12	3	3	4300	40000
10317	0.14	3	3	4300	40000
9083	0.15	3	3	4300	40000
8054	0.17	3	3	4300	40000
6970	0.20	3	3	4300	40000
6027	0.23	3	3	4300	40000
5391	0.26	3	3	4300	40000
4669	0.30	3	3	4300	40000
4082	0.34	3	3	4300	40000
3583	0.39	3	3	4300	40000
3108	0.45	3	3	4300	40000
2757	0.51	3	3	4300	40000
2419	0.58	3	2	4300	40000
2123	0.66	3	2	4300	40000
1856	0.75	3	2	4300	40000
1625	0.86	3	2	4300	40000
1430	0.98	3	2	4300	40000
1261	1.1	3	2	4300	40000
1102	1.3	3	2	4300	40000
957	1.5	3	2	4300	40000
855	1.6	3	2	4300	40000
743	1.9	3	2	4300	40000
652	2.1	3	2	4300	40000
573	2.4	3	2	4300	40000
504	2.8	3	2	4300	40000
437	3.2	3	2	4300	40000
382	3.7	3	2	4300	40000
342	4.1	3	2	4300	40000
305	4.6	3	2	4300	40000
258	5.4	3	2	4300	40000
232	6.0	3	2	4300	40000
199	7.0	3	2	4300	40000

MDK107R77				8000Nm	
i	n_a [1/min]	Stopień *Stage* K107	R77	M_{amax} [Nm]	F_{Ra} [N]
14311	0.10	3	3	8000	65000
12211	0.11	3	3	8000	65000
10677	0.13	3	3	8000	65000
9524	0.15	3	3	8000	65000
8328	0.17	3	3	8000	65000
7270	0.19	3	3	8000	65000
6184	0.23	3	3	8000	65000
5662	0.25	3	3	8000	65000
5138	0.27	3	3	8000	65000
4359	0.32	3	3	8000	65000
3810	0.37	3	3	8000	65000
3358	0.42	3	3	8000	65000
2977	0.47	3	3	8000	65000
2599	0.54	3	3	8000	65000
2286	0.61	3	3	8000	65000
1939	0.72	3	3	8000	65000
1713	0.82	3	2	8000	65000
1554	0.90	3	2	8000	65000
1336	1.0	3	2	8000	65000
1166	1.2	3	2	8000	65000
1030	1.4	3	2	8000	65000
904	1.5	3	2	8000	65000
793	1.8	3	2	8000	65000
696	2.0	3	2	8000	65000
615	2.3	3	2	8000	65000
522	2.7	3	2	8000	65000
461	3.0	3	2	8000	65000
408	3.4	3	2	8000	65000
364	3.8	3	2	8000	65000
318	4.4	3	2	8000	65000
286	4.9	3	2	8000	65000
251	5.6	3	2	8000	65000
222	6.3	3	2	8000	65000
196	7.1	3	2	8000	65000
174	8.0	3	2	7200	65000
154	9.1	3	2	7200	65000
140	10	3	2	7200	65000

MDK127R77				13000Nm	
i	n_a [1/min]	Stopień *Stage* K127	R77	M_{amax} [Nm]	F_{Ra} [N]
17550	0.08	3	3	13000	79200
16006	0.09	3	3	13000	79200
14975	0.09	3	3	13000	79200
12440	0.11	3	3	13000	79200
10915	0.13	3	3	13000	79200
9818	0.14	3	3	13000	79200
8443	0.17	3	3	13000	79200
7482	0.19	3	3	13000	79200
6565	0.21	3	3	13000	79200
5804	0.24	3	3	13000	79200
5027	0.28	3	3	13000	79200
4423	0.32	3	3	13000	79200
3889	0.36	3	3	13000	79200
3311	0.42	3	3	13000	79200
3009	0.47	3	3	13000	79200
2607	0.54	3	3	13000	79200
2268	0.62	3	3	13000	79200
1926	0.73	3	2	13000	79200
1757	0.80	3	2	13000	79200
1541	0.91	3	2	13000	79200
1342	1.0	3	2	13000	79200
1177	1.2	3	2	13000	79200
1025	1.4	3	2	13000	79200
899	1.6	3	2	13000	79200
790	1.8	3	2	13000	79200
704	2.0	3	2	13000	79200
610	2.3	3	2	13000	79200
549	2.6	3	2	13000	79200
477	2.9	3	2	13000	79200
418	3.3	3	2	13000	79200

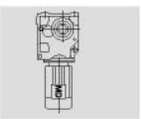

MDK127R87, MDK157R97, MDK157R107 n_e=1400 1/min

MDK127R87 — 13000Nm

i	n_a [1/min]	Stopień *Stage* K127	R87	M_{amax} [Nm]	F_{Ra} [N]
536	2.6	3	2	13000	79200
473	3.0	3	2	13000	79200
418	3.3	3	2	13000	79200
367	3.8	3	2	13000	79200
330	4.2	3	2	13000	79200
287	4.9	3	2	13000	79200
253	5.5	3	2	13000	79200
213	6.6	3	2	13000	79200
200	7.0	3	2	13000	79700
166	8.4	3	2	13000	79700
147	9.5	3	2	13000	79700

MDK157R97 — 18000Nm

i	n_a [1/min]	Stopień *Stage* K157	R97	M_{amax} [Nm]	F_{Ra} [N]
17679	0.08	3	3	18000	112200
15729	0.09	3	3	18000	112200
14721	0.10	3	3	18000	112200
13097	0.11	3	3	18000	112200
11368	0.12	3	3	18000	112200
10114	0.14	3	3	18000	112200
8718	0.16	3	3	18000	112200
7734	0.18	3	3	18000	112200
6881	0.20	3	3	18000	112200
5931	0.24	3	3	18000	112200
5074	0.28	3	3	18000	112200
4514	0.31	3	3	18000	112200
3979	0.35	3	3	18000	112200
3516	0.40	3	3	18000	112200
3051	0.46	3	3	18000	112200
2610	0.54	3	3	18000	112200
2322	0.60	3	3	18000	112200
2029	0.69	3	3	18000	112200
1805	0.78	3	3	18000	112200
1659	0.84	3	2	18000	112200
1365	1.0	3	2	18000	112200
1229	1.1	3	2	18000	112200
1093	1.3	3	2	18000	112200
942	1.5	3	2	18000	112200
854	1.6	3	2	18000	112200
756	1.9	3	2	18000	112200
661	2.1	3	2	18000	112200
567	2.5	3	2	18000	112200
504	2.8	3	2	18000	112200
434	3.2	3	2	18000	112200
379	3.7	3	2	18000	112200
333	4.2	3	2	18000	112200
291	4.8	3	2	18000	112200

MDK157R107 — 18000Nm

i	n_a [1/min]	Stopień *Stage* K157	R107	M_{amax} [Nm]	F_{Ra} [N]
385	3.6	3	2	18000	112200
325	4.3	3	2	18000	111200
299	4.7	3	2	18000	111200
253	5.5	3	2	18000	112200
230	6.1	3	2	18000	111200
213	6.6	3	2	18000	111200
187	7.5	3	2	18000	112200
157	8.9	3	2	18000	111200
122	11	3	2	18000	106500
107	13	3	2	18000	100700

MDK167/187/R97, MDK167/187R107

n_e=1400 1/min

MDK167R97 — 32000Nm

i	n_a [1/min]	Stopień *Stage* K167	R97	M_{amax} [Nm]	F_{Ra} [N]
19723	0.07	3	3	32000	150000
17406	0.08	3	3	32000	150000
15000	0.09	3	3	32000	150000
13238	0.11	3	3	32000	150000
11573	0.12	3	3	32000	150000
10264	0.14	3	3	32000	150000
8628	0.16	3	3	32000	150000
6562	0.21	3	3	32000	150000
5355	0.26	3	3	32000	150000
4788	0.29	3	3	32000	150000
4079	0.34	3	3	32000	150000
3376	0.41	3	3	32000	150000
2755	0.51	3	3	32000	150000
2263	0.62	3	3	32000	150000
2182	0.64	3	2	32000	150000
1704	0.82	3	2	32000	150000
1408	0.99	3	2	32000	150000
1296	1.1	3	2	32000	150000
1101	1.3	3	2	32000	150000
944	1.5	3	2	32000	150000
843	1.7	3	2	32000	150000
757	1.8	3	2	32000	150000
632	2.2	3	2	32000	150000
561	2.5	3	2	32000	150000
481	2.9	3	2	32000	150000
423	3.3	3	2	32000	150000
369	3.8	3	2	32000	150000

MDK187R107 — 50000Nm

i	n_a [1/min]	M_{amax} [Nm]	F_{Ra} [N]
835	1.7	50000	190000
729	1.9	50000	190000
622	2.3	50000	190000
520	2.7	50000	190000
454	3.1	50000	190000
355	3.9	50000	190000
261	5.4	50000	190000
221	6.3	50000	190000
193	7.3	50000	190000
163	8.6	50000	190000

MDK167R107 — 32000Nm

i	n_a [1/min]	Stopień *Stage* K167	R107	M_{amax} [Nm]	F_{Ra} [N]
318	4.4	3	2	32000	150000
278	5.0	3	2	32000	150000
244	5.7	3	2	32000	150000
213	6.6	3	2	32000	150000
206	6.8	3	2	32000	150000
180	7.8	3	2	32000	150000
160	8.8	3	2	32000	150000
135	10	3	2	32000	150000
118	12	3	2	32000	150000

MDK187R97 — 50000Nm

i	n_a [1/min]	Stopień *Stage* K187	R97	M_{amax} [Nm]	F_{Ra} [N]
32625	0.04	3	3	50000	189900
27165	0.05	3	3	50000	189900
24353	0.06	3	3	50000	189900
19144	0.07	3	3	50000	189900
16978	0.08	3	3	50000	189900
14272	0.10	3	3	50000	189900
13116	0.11	3	3	50000	189900
11647	0.12	3	3	50000	189900
10413	0.13	3	3	50000	189900
9363	0.15	3	3	50000	189900
8126	0.17	3	3	50000	189900
7343	0.19	3	3	50000	189900
6747	0.21	3	3	50000	189900
5991	0.23	3	3	50000	189900
5358	0.26	3	3	50000	189900
4817	0.29	3	3	50000	189900
4370	0.32	3	3	50000	189900
3609	0.39	3	3	50000	189900
3062	0.46	3	3	50000	189900
2818	0.50	3	3	50000	189900
2519	0.56	3	2	50000	189900
2268	0.62	3	2	50000	189900
2054	0.68	3	2	50000	189900
1821	0.77	3	2	50000	189900
1605	0.87	3	2	50000	189900
1395	1.0	3	2	50000	189900
1196	1.2	3	2	50000	189900
1046	1.3	3	2	50000	189900
945	1.5	3	2	50000	189900
738	1.9	3	2	50000	189900
621	2.3	3	2	50000	189900
527	2.7	3	2	50000	189900

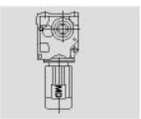

7.4. Tabele doboru motoreduktorów
7.4. Selection tables for gearmotors

Wyjaśnienie oznaczeń:
Description:

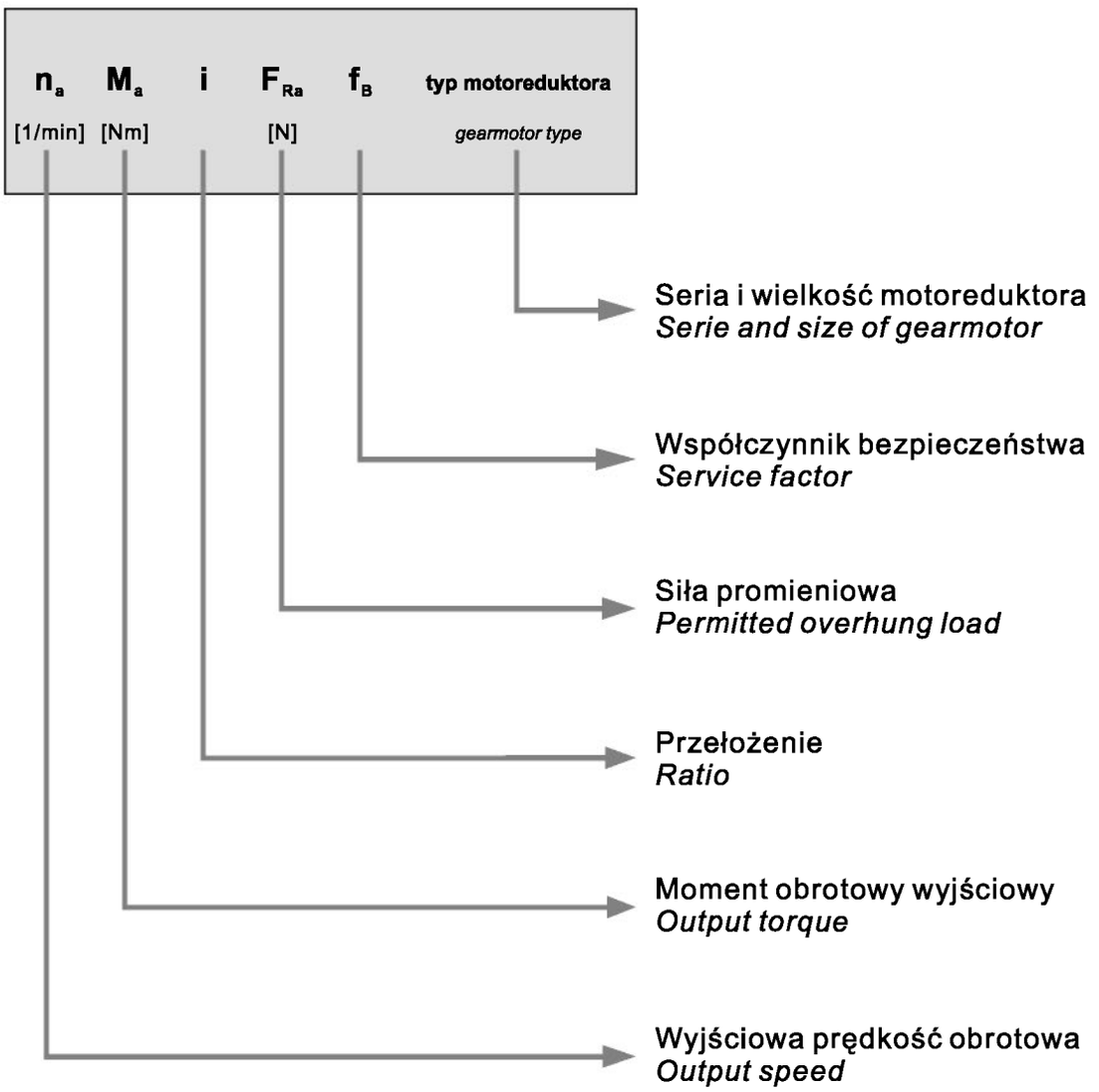

Tabele doboru motoreduktorów zawierają oznaczenia silników standardowych zintegrowanych. Każdy motoreduktor może być wyposażony w dowolny, inny silnik, również znormalizowany IEC.
Selection tables for gearmotors include descriptions of standard, integrated electric motors. Each gearmotor can be supplied with any other electric motor, including IEC standard.

n_a [1/min]	M_a [Nm]	i	F_{Ra} [N]	f_B	typ motoreduktora *gearmotor type*
0.12kW					
0.08	10900	17550	80300	1.20	MDK127R77DS63S4 MDKF127R77DS63S4 MDKA127R77DS63S4 MDKAF127R77DS63S4
0.09	9900	16006	80700	1.30	
0.09	9260	14975	81000	1.40	
0.11	7690	12440	81600	1.70	
0.13	6750	10915	81900	1.95	
0.14	6070	9819	82000	2.1	
0.16	5190	8443	82300	2.5	
0.18	4630	7482	82400	2.8	
0.10	8850	14311	65000	0.90	MDK107R77DS63S4 MDKF107R77DS63S4 MDKA107R77DS63S4 MDKAF107R77DS63S4
0.11	7550	12211	65000	1.05	
0.13	6600	10677	65000	1.20	
0.14	5890	9524	65000	1.35	
0.17	5150	8328	65000	1.55	
0.19	4500	7270	65000	1.80	
0.22	3710	6184	65000	2.2	
0.24	3220	5662	65000	2.5	
0.27	2920	5138	65000	2.7	
0.32	2680	4359	65000	3.0	
0.17	5460	8054	39400	0.80	MDK97R57DS63S4 MDKF97R57DS63S4 MDKA97R57DS63S4 MDKAF97R57DS63S4
0.20	4430	6970	40000	0.95	
0.23	4000	6027	40000	1.05	
0.26	3660	5391	40000	1.20	
0.30	3020	4669	40000	1.40	
0.34	2740	4082	40000	1.55	
0.39	2380	3583	40000	1.80	
0.44	2100	3108	40000	2.1	
0.50	1770	2757	40000	2.4	
0.57	1650	2419	40000	2.6	MDK97R57DS63S4 MDKF97R57DS63S4 MDKA97R57DS63S4 MDKAF97R57DS63S4
0.65	1430	2123	40000	3.0	
0.74	1270	1856	40000	3.4	
0.85	1050	1625	40000	4.1	
0.96	890	1430	40000	4.8	
1.1	870	1261	40000	5.0	
1.2	755	1102	40000	5.7	
0.26	3480	5240	26200	0.80	MDK87R57DS63S4 MDKF87R57DS63S4 MDKA87R57DS63S4 MDKAF87R57DS63S4
0.30	2900	4562	27000	0.95	
0.34	2680	4037	27300	1.00	
0.38	2400	3609	27600	1.15	
0.44	2070	3107	28000	1.30	
0.51	1730	2728	28300	1.55	
0.58	1530	2371	28400	1.75	
0.66	1430	2088	28500	1.90	MDK87R57DS63S4 MDKF87R57DS63S4 MDKA87R57DS63S4 MDKAF87R57DS63S4
0.74	1270	1854	28600	2.1	
0.83	1140	1657	28700	2.4	
0.97	970	1415	28800	2.8	
1.1	840	1229	28900	3.2	
1.3	725	1078	28900	3.7	
1.4	610	951	29000	4.4	
1.7	525	837	29000	5.2	
1.9	455	726	29000	5.9	

n_a [1/min]	M_a [Nm]	i	F_{Ra} [N]	f_B	typ motoreduktora *gearmotor type*
0.12kW					
0.51	1840	2717	11500	0.85	MDK77R37DS63S4 MDKF77R37DS63S4 MDKA77R37DS63S4 MDKAF77R37DS63S4
0.58	1530	2370	15500	1.00	
0.67	1440	2050	16100	1.10	MDK77R37DS63S4 MDKF77R37DS63S4 MDKA77R37DS63S4 MDKAF77R37DS63S4
0.78	1230	1772	17300	1.25	
0.91	1050	1514	18100	1.50	
0.99	960	1388	18500	1.60	
1.1	840	1218	18900	1.85	
1.3	740	1053	19200	2.1	
1.5	645	924	19400	2.4	
1.7	570	815	19600	2.7	
2.0	450	709	19800	3.5	
2.2	395	622	19900	3.9	
1.0	960	1351	6940	0.85	MDK67R37DS63S4 MDKF67R37DS63S4 MDKA67R37DS63S4 MDKAF67R37DS63S4
1.2	830	1171	10300	1.00	
1.3	725	1034	11100	1.15	
1.5	605	903	11900	1.35	
1.7	570	793	12100	1.45	
2.0	455	697	12600	1.80	
2.2	400	613	12800	2.0	
2.6	350	542	13000	2.3	
2.9	330	471	13000	2.5	
3.3	270	420	13000	3.0	
3.8	250	361	13000	3.3	
4.3	220	323	13000	3.8	
5.0	181	279	13000	4.5	
5.6	159	246	13000	5.2	
6.4	139	217	13000	5.9	
1.5	605	906	7590	1.00	MDK57R37DS63S4 MDKF57R37DS63S4 MDKA57R37DS63S4 MDKAF57R37DS63S4
1.7	545	806	8060	1.10	
2.0	455	699	8630	1.30	
2.2	400	615	8870	1.50	
2.5	350	544	9080	1.70	
2.9	325	473	9190	1.85	
3.3	275	421	9390	2.2	
3.8	250	362	9470	2.4	
4.3	220	319	9570	2.8	
4.9	181	280	9690	3.3	
5.6	160	246	9760	3.8	
6.4	141	215	9810	4.3	
7.2	126	192	9850	4.8	
2.2	430	639	2520	0.95	MDK47R37DS63S4 MDKF47R37DS63S4 MDKA47R37DS63S4 MDKAF47R37DS63S4
2.5	380	552	6170	1.05	
2.8	325	495	6840	1.25	
3.2	290	426	7160	1.40	
3.7	245	375	7510	1.65	
4.2	225	327	7620	1.75	
4.8	198	289	7780	2.0	

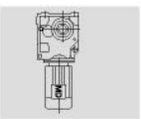

n_a [1/min]	M_a [Nm]	i	F_{Ra} [N]	f_B	typ motoreduktora *gearmotor type*
0.12kW					
4.0	245	346	3540	0.80	
4.5	205	304	5570	0.95	
5.2	189	267	5760	1.05	MDK37R17DS63S4
5.9	163	234	6010	1.20	MDKF37R17DS63S4
6.7	143	205	6180	1.40	MDKA37R17DS63S4
7.6	124	181	6300	1.60	MDKAF37R17DS63S4
8.6	109	160	6400	1.85	
10	91	136	6490	2.2	
6.2	184	144.79	13000	4.5	MDK67DS63M6 MDKF67DS63M6 MDKA67DS63M6 MDKAF67DS63M6
6.2	185	145.14	9680	3.3	
7.3	158	123.85	9760	3.8	MDK57DS63M6
8.3	138	108.29	9820	4.4	MDKF57DS63M6
8.8	131	102.88	9840	4.6	MDKA57DS63M6
10	115	90.26	9880	5.2	MDKAF57DS63M6
12	98	76.56	9930	6.2	
9.5	121	145.14	9870	5.0	
11	103	123.85	9920	5.8	MDK57DS63M6
13	90	108.29	9950	6.7	MDKF57DS63M6
13	85	102.88	9960	7.0	MDKA57DS63M6 MDKAF57DS63M6
15	75	90.26	9990	8.0	
6.8	168	131.87	7930	2.4	MDK47DS63M6
7.4	155	121.48	7990	2.6	MDKF47DS63M6 MDKA47DS63M6
8.6	133	104.37	8070	3.0	MDKAF47DS63M6
10	110	131.87	8140	3.7	MDK47DS63S4 MDKF47DS63S4
11	101	121.48	8170	4.0	MDKA47DS63S4 MDKAF47DS63S4
8.5	136	106.38	6230	1.50	MDK37DS63M6
9.2	125	97.81	6300	1.60	MDKF37DS63M6
11	107	83.69	6410	1.90	MDKA37DS63M6
12	92	72.54	6480	2.2	MDKAF37DS63M6
13	88	106.38	6500	2.3	
14	81	97.81	6530	2.5	
16	70	83.69	6570	2.9	
19	60	72.54	6600	3.3	
20	56	67.80	6610	3.6	
24	49	58.60	6430	4.1	
28	41	49.79	6130	4.8	
31	37	44.46	5930	5.4	MDK37DS63S4 MDKF37DS63S4
36	32	37.97	5660	6.4	MDKA37DS63S4
39	30	35.57	5550	6.8	MDKAF37DS63S4
46	25	29.96	5270	8.0	
48	24	28.83	5210	8.4	
55	21	24.99	4980	9.6	
59	19	23.36	4880	10	
68	17	20.19	4660	11	
80	14	17.15	4430	13	

n_a [1/min]	M_a [Nm]	i	F_{Ra} [N]	f_B	typ motoreduktora *gearmotor type*
0.12kW					
90	13	15.31	4280	14	MDK37DS63S4 MDKF37DS63S4
105	11	13.08	4070	15	MDKA37DS63S4
114	10	12.14	3970	16	MDKAF37DS63S4
0.18kW					
0.09	15800	14975	74400	0.80	
0.11	13100	12440	79100	1.00	
0.12	11500	10915	80000	1.15	
0.13	10300	9819	80500	1.25	
0.16	8870	8443	81100	1.45	MDK127R77DS63M4
0.18	7880	7482	81500	1.65	MDKF127R77DS63M4
0.20	6920	6565	81800	1.90	MDKA127R77DS63M4
0.23	5890	5804	82100	2.2	MDKAF127R77DS63M4
0.26	5210	5027	82300	2.5	
0.30	4490	4423	82400	2.9	
0.34	3910	3889	82500	3.3	
0.40	3250	3311	82600	4.0	
0.16	8780	8328	65000	0.90	
0.18	7660	7270	65000	1.05	
0.21	6410	6184	65000	1.25	
0.23	5690	5662	65000	1.40	
0.26	5160	5138	65000	1.55	MDK107R77DS63M4
0.30	4580	4359	65000	1.75	MDKF107R77DS63M4
0.35	4010	3810	65000	2.0	MDKA107R77DS63M4 MDKAF107R77DS63M4
0.39	3410	3358	65000	2.4	
0.44	3090	2977	65000	2.6	
0.51	2690	2599	65000	3.0	
0.58	2320	2286	65000	3.5	
0.28	5060	4669	39800	0.85	
0.32	4540	4082	40000	0.95	MDK97R57DS63M4
0.37	3940	3583	40000	1.10	MDKF97R57DS63M4
0.42	3450	3108	40000	1.25	MDKA97R57DS63M4 MDKAF97R57DS63M4
0.48	2990	2757	40000	1.45	
0.55	2720	2419	40000	1.60	
0.62	2360	2123	40000	1.80	
0.71	2090	1856	40000	2.1	
0.81	1760	1625	40000	2.4	
0.92	1530	1430	40000	2.8	MDK97R57DS63M4
1.0	1420	1261	40000	3.0	MDKF97R57DS63M4
1.2	1240	1102	40000	3.5	MDKA97R57DS63M4 MDKAF97R57DS63M4
1.4	1090	957	40000	4.0	
1.5	970	855	40000	4.4	
1.8	775	743	40000	5.6	
2.0	690	652	40000	6.2	
0.42	3440	3107	26400	0.80	
0.48	2920	2728	27100	0.90	MDK87R57DS63M4
0.56	2570	2371	27500	1.05	MDKF87R57DS63M4
0.63	2350	2088	27700	1.15	MDKA87R57DS63M4
0.71	2090	1854	28000	1.30	MDKAF87R57DS63M4
0.80	1870	1657	28200	1.45	

n_a [1/min]	M_a [Nm]	i	F_{Ra} [N]	f_B	typ motoreduktora *gearmotor type*
0.18kW					
0.93	1590	1415	28400	1.70	MDK87R57DS63M4 MDKF87R57DS63M4 MDKA87R57DS63M4 MDKAF87R57DS63M4
1.1	1380	1229	28600	1.95	
1.2	1200	1078	28700	2.3	
1.4	1030	951	28800	2.6	
1.6	890	837	28000	3.0	
1.8	775	726	28900	3.5	
0.87	1720	1514	14100	0.90	MDK77R37DS63M4 MDKF77R37DS63M4 MDKA77R37DS63M4 MDKAF77R37DS63M4
0.95	1570	1388	15200	1.00	
1.1	1380	1218	16500	1.10	
1.2	1200	1053	17400	1.30	
1.4	1050	924	18100	1.45	
1.6	930	815	18600	1.65	
1.9	760	709	19100	2..0	
2.1	670	622	19300	2..3	
2.4	600	552	19500	2..6	
2.7	530	485	19600	2..9	
3.1	465	428	19800	3.3	
3.6	410	367	19800	3.8	
1.5	980	903	5660	0.85	MDK67R37DS63M4 MDKF67R37DS63M4 MDKA67R37DS63M4 MDKAF67R37DS63M4
1.7	930	793	9240	0.90	
1.9	765	697	10800	1.05	
2.2	670	613	11500	1.20	
2.4	590	542	12000	1.40	
2.8	540	471	12200	1.50	
3.2	455	420	12600	1.80	
3.7	410	361	12800	2..0	
4.1	360	323	12900	2..3	
4.7	305	279	13000	2.7	
2.2	660	615	5580	0.9	MDK57R37DS63M4 MDKF57R37DS63M4 MDKA57R37DS63M4 MDKAF57R37DS63M4
2.4	590	544	7690	1.00	
2.8	535	473	8150	1.10	
3.1	460	421	8620	1.30	
3.6	410	362	8840	1.45	
4.1	360	319	9050	1.65	
4.7	305	280	9270	1.95	
5.4	270	246	9400	2.2	
6.1	235	215	9510	2.5	
6.9	210	192	9600	2.9	
7.9	182	166	9690	3.3	
3.5	410	375	5600	1.00	MDK47R37DS63M4 MDKF47R37DS63M4 MDKA47R37DS63M4 MDKAF47R37DS63M4
4.0	370	327	6320	1.10	
4.6	325	289	6810	1.20	
5.2	280	256	7240	1.45	
5.9	250	225	7450	1.60	
6.7	215	198	7680	1.85	
7.7	188	171	7840	2.1	
8.6	168	153	7930	2.4	
10	147	131	8202	2.7	

n_a [1/min]	M_a [Nm]	i	F_{Ra} [N]	f_B	typ motoreduktora *gearmotor type*
0.18kW					
6.4	235	205	4860	0.85	MDK37R17DS63M4 MDKF37R17DS63M4 MDKA37R17DS63M4 MDKAF37R17DS63M4
7.3	205	181	5590	1.00	
8.2	180	160	5860	1.10	
9.7	151	136	6110	1.35	
10	145	127	6160	1.40	
6.0	285	144.79	13000	2.9	MDK67DS63L6 MDKF67DS63L6 MDKA67DS63L6 MDKAF67DS63L6
7.0	245	123.54	13000	3.4	
8.1	215	108.03	13000	3.8	
8.5	205	102.62	13000	4.0	
9.1	189	144.79	13000	4.3	MDK67DS63M4 MDKF67DS63M4 MDKA67DS63M4 MDKAF67DS63M4
11	161	123.54	13000	5.1	
12	141	108.03	13000	5.8	
6.0	285	145.14	9340	2.1	MDK57DS63L6 MDKF57DS63L6 MDKA57DS63L6 MDKAF57DS63L6
7.0	245	123.85	9480	2.5	
8.0	215	108.29	9590	2.8	
8.5	205	102.88	9620	3.0	
9.6	178	90.26	9700	3.4	
9.1	189	145.14	9670	3.2	MDK57DS63M4 MDKF57DS63M4 MDKA57DS63M4 MDKAF57DS63M4
11	161	123.85	9750	3.7	
12	141	108.29	9810	4.3	
13	134	102.88	9830	4.5	
15	118	90.26	9880	5.1	
17	100	76.56	9920	6.0	
6.6	260	131.87	7380	1.55	MDK47DS63L6 MDKF47DS63L6 MDKA47DS63L6 MDKAF47DS63L6
7.2	240	121.48	7530	1.65	
8.3	205	104.37	7740	1.95	
9.6	180	90.86	7880	2.2	
10	168	85.12	7930	2.4	
10	172	131.87	7910	2.3	MDK47DS63M4 MDKF47DS63M4 MDKA47DS63M4 MDKAF47DS63M4
11	158	121.48	7970	2.5	
13	136	104.37	8060	2.9	
15	118	90.86	8120	3.4	
16	111	85.12	8140	3.6	
8.2	210	106.38	5520	0.95	MDK37DS63L6 MDKF37DS63L6 MDKA37DS63L6 MDKAF37DS63L6
8.9	193	97.81	5710	1.05	
10	165	83.69	5990	1.20	
12	143	72.54	6170	1.40	
12	139	106.38	6210	1.45	MDK37DS63M4 MDKF37DS63M4 MDKA37DS63M4 MDKAF37DS63M4
14	127	97.81	6280	1.55	
16	109	83.69	6400	1.85	
18	95	72.54	6470	2.1	
19	88	67.80	6500	2.3	
23	76	58.60	6280	2.6	
27	65	49.79	6010	3.1	
30	58	44.46	5830	3.5	
35	49	37.97	5580	4.1	
37	46	35.57	5480	4.3	
44	39	29.96	5220	5.1	

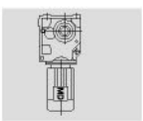

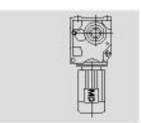

n_a [1/min]	M_a [Nm]	i	F_{Ra} [N]	f_B	typ motoreduktora *gearmotor type*
0.18kW					
46	38	28.83	5160	5.3	MDK37DS63M4 MDKF37DS63M4 MDKA37DS63M4 MDKAF37DS63M4
53	33	24.99	4950	6.2	
57	30	23.36	4850	6.4	
65	26	20.19	4650	7.0	
77	22	17.15	4430	8.1	
86	20	15.31	4280	8.8	
101	17	13.08	4080	9.7	
109	16	12.14	3980	10	
126	14	10.49	3810	12	
148	12	8.91	3620	14	
166	10	7.96	3490	15	
0.25kW					
0.13	15200	9819	75600	0.85	MDK127R77DS63L4 MDKF127R77DS63L4 MDKA127R77DS63L4 MDKAF127R77DS63L4
0.15	13000	8443	79200	1.00	
0.17	11600	7482	79900	1.10	
0.20	10200	6565	80600	1.30	
0.22	8750	5804	81200	1.50	
0.26	7690	5027	81600	1.70	
0.29	6670	4423	81900	1.95	
0.33	5830	3889	82100	2.2	
0.39	4880	3311	82300	2.6	
0.21	9460	6184	65000	0.85	MDK107R77DS63L4 MDKF107R77DS63L4 MDKA107R77DS63L4 MDKAF107R77DS63L4
0.23	8480	5662	65000	0.95	
0.25	7700	5138	65000	1.05	
0.30	6730	4359	65000	1.20	
0.34	5880	3810	65000	1.35	
0.39	5060	3358	65000	1.60	
0.44	4550	2977	65000	1.75	
0.50	3980	2599	65000	2.0	
0.57	6450	2286	65000	2.3	
0.67	2920	1939	65000	2.7	
0.76	2680	1713	65000	3.0	MDK107R77DS63L4 MDKF107R77DS63L4 MDKA107R77DS63L4 MDKAF107R77DS63L4
0.84	2430	1554	65000	3.3	
0.97	2090	1336	65000	3.8	
0.42	4990	3108	39900	0.85	MDK97R77DS63L4 MDKF97R77DS63L4 MDKA97R77DS63L4 MDKAF97R77DS63L4
0.47	4360	2757	40000	1.00	
0.54	3930	2419	40000	1.10	MDK97R57DS63L4 MDKF97R57DS63L4 MDKA97R57DS63L4 MDKAF97R57DS63L4
0.61	3420	2123	40000	1.25	
0.70	3020	1856	40000	1.40	
0.80	2580	1625	40000	1.65	
0.91	2240	1430	40000	1.90	
1.0	2050	1261	40000	2.1	
1.2	1790	1102	40000	2.4	
1.4	1570	957	40000	2.7	
1.5	1400	855	40000	3.1	

n_a [1/min]	M_a [Nm]	i	F_{Ra} [N]	f_B	typ motoreduktora *gearmotor type*
0.25kW					
0.62	3390	2088	26300	0.80	MDK87R57DS63L4 MDKF87R57DS63L4 MDKA87R57DS63L4 MDKAF87R57DS63L4
0.70	3010	1854	26900	0.90	
0.78	2700	1657	27300	1.00	
0.92	2300	1415	27800	1.15	
1.1	2000	1229	28100	1.35	
1.2	1740	1078	28300	1.55	
1.4	1510	951	28500	1.80	
1.5	1310	837	28600	2.1	
1.8	1140	726	28700	2.4	
2.0	1010	638	28800	2.7	
1.2	1730	1053	14000	0.90	MDK77R37DS63L4 MDKF77R37DS63L4 MDKA77R37DS63L4 MDKAF77R37DS63L4
1.4	1520	924	15600	1.00	
1.6	1340	815	16700	1.15	
1.8	1120	709	17800	1.40	
2.1	980	622	18400	1.60	
2.3	880	552	18700	1.75	
2.7	770	485	19100	2.0	
3.0	680	428	19300	2.3	
3.5	595	367	19500	2.6	
4.0	525	328	19600	2.9	
4.5	470	290	19700	3.3	
5.2	400	252	19900	3.9	
5.9	355	221	19900	4.4	
6.7	310	195	20000	5.0	
7.4	275	175	20000	5.7	
2.1	980	613	5690	0.85	MDK67R37DS63L4 MDKF67R37DS63L4 MDKA67R37DS63L4 MDKAF67R37DS63L4
2.4	860	542	9920	0.95	
2.8	775	471	10700	1.05	
3.1	665	420	11500	1.25	
3.6	590	361	11900	1.40	
4.0	525	323	12300	1.55	
4.7	445	279	12700	1.85	
5.3	390	246	12800	2.1	
6.0	345	217	13000	2.4	
3.1	670	421	4200	0.90	MDK57R37DS63L4 MDKF57R37DS63L4 MDKA57R37DS63L4 MDKAF57R37DS63L4
3.6	590	362	7690	1.00	
4.1	520	319	8260	1.15	
4.7	445	280	8680	1.35	
5.3	390	246	8920	1.55	
6.1	345	215	9110	1.75	
6.8	305	192	9260	1.95	
7.8	265	166	9410	2.3	
9.0	230	145	9530	2.6	
10	210	129	9600	2.9	
12	178	111	9700	3.4	
13	156	97	9770	3.8	
4.4	540	154.02	19600	2.9	MDK77D80N8 MDKF77D80N8 MDKA77D80N8 MDKAF77D80N8
5.0	475	135.28	19700	3.3	
5.3	450	128.52	19800	3.4	
6.0	400	113.56	19900	3.9	

n_a [1/min]	M_a [Nm]	i	F_{Ra} [N]	f_B	typ motoreduktora *gearmotor type*
0.25kW					
4.6	520	192.18	19700	2.8	MDK77DS71S6
4.9	485	179.37	19700	3.0	MDKF77DS71S6
5.7	420	154.02	19800	3.7	MDKA77DS71S6
6.5	365	135.28	19900	4.2	MDKAF77DS71S6
5.5	435	123.54	12700	1.90	MDK67D80N8
6.3	380	108.03	12900	2.2	MDKF67D80N8
6.6	360	102.62	12900	2.3	MDKA67D80N8
7.6	315	90.04	13000	2.6	MDKAF67D80N8
6.1	395	144.79	12800	2.1	MDK67DS71S6
7.1	335	123.54	13000	2.5	MDKF67DS71S6
8.1	295	108.03	13000	2.8	MDKA67DS71S6
8.6	280	102.62	13000	3.0	MDKAF67DS71S6
9.0	265	144.79	13000	3.1	MDK67DS63L4
11	225	123.54	13000	3.6	MDKF67DS63L4
12	198	108.03	13000	4.1	MDKA67DS63L4
13	189	102.62	13000	4.3	MDKAF67DS63L4
6.1	395	145.14	8910	1.50	
7.1	335	123.85	9150	1.80	MDK57DS71S6
8.1	295	108.29	9310	2.0	MDKF57DS71S6
8.6	280	102.88	9360	2.2	MDKA57DS71S6
9.8	245	90.26	9480	2.5	MDKAF57DS71S6
11	210	76.56	9610	2.9	
9.0	265	145.14	9410	2.2	
11	225	123.85	9540	2.6	MDK57DS63L4
12	199	108.29	9640	3.0	MDKF57DS63L4
13	189	102.88	9670	3.2	MDKA57DS63L4
14	166	90.26	9740	3.6	MDKAF57DS63L4
17	141	76.56	9810	4.3	
6.7	360	131.87	6470	1.10	
7.2	330	121.48	6780	1.20	MDK47DS71S6
8.4	285	104.73	7210	1.40	MDKF47DS71S6
9.7	245	90.86	7480	1.60	MDKA47DS71S6
10	230	85.12	7590	1.75	MDKAF47DS71S6
9.9	240	131.87	7510	1.65	
11	225	121.48	7640	1.80	MDK47DS63L4
12	192	104.37	7820	2.1	MDKF47DS63L4
14	167	90.86	7930	2.4	MDKA47DS63L4
15	156	85.12	7980	2.6	MDKAF47DS63L4
11	225	83.69	5300	0.90	
12	197	72.54	5680	1.00	MDK37DS71S6
13	184	67.80	5810	1.10	MDKF37DS71S6
15	159	58.60	6050	1.25	MDKA37DS71S6
18	135	49.79	6230	1.50	MDKAF37DS71S6
12	195	106.38	5690	1.00	
13	180	97.81	5860	1.10	MDK37DS63L4
16	154	83.69	6090	1.30	MDKF37DS63L4
18	133	72.54	6250	1.50	MDKA37DS63L4
19	125	67.80	6230	1.60	MDKAF37DS63L4
22	108	58.60	6030	1.85	

n_a [1/min]	M_a [Nm]	i	F_{Ra} [N]	f_B	typ motoreduktora *gearmotor type*
0.25kW					
26	91	49.79	5810	2.2	
29	82	44.46	5650	2.5	
34	70	37.97	5430	2.9	
37	65	35.57	5340	3.1	
43	55	29.96	5100	3.6	
45	53	28.83	5050	3.8	
52	46	24.99	4860	4.4	
56	43	23.36	4770	4.6	MDK37DS63L4
64	37	20.19	4580	5.0	MDKF37DS63L4
76	32	17.15	4370	5.7	MDKA37DS63L4
85	28	15.31	4230	6.2	MDKAF37DS63L4
99	24	13.08	4030	6.9	
107	22	12.14	3940	7.2	
124	19	10.49	3780	8.3	
146	16	8.91	3590	9.8	
163	15	7.96	3470	11	
191	13	6.80	3310	12	
204	12	6.37	3240	12	
0.37kW					
0.18	16600	7482	72700	0.80	
0.21	14500	6565	76900	0.90	
0.24	12600	5804	79400	1.05	MDK127R77DS71S4
0.27	11000	5027	80200	1.20	MDKF127R77DS71S4
0.31	9610	4423	80800	1.35	MDKA127R77DS71S4
0.35	8420	3889	81300	1.55	MDKAF127R77DS71S4
0.42	7080	3311	81800	1.85	
0.72	4280	1926	82400	3.1	MDK127R77DS71S4
0.79	3900	1757	82500	3.4	MDKF127R77DS71S4
0.90	3390	1541	82600	3.9	MDKA127R77DS71S4
					MDKAF127R77DS71S4
0.36	8420	3810	65000	0.95	
0.41	7300	3358	65000	1.10	MDK107R77DS71S4
0.46	6540	2977	65000	1.2	MDKF107R77DS71S4
0.53	5710	2599	65000	1.40	MDKA107R77DS71S4
0.60	4970	2286	65000	1.60	MDKAF107R77DS71S4
0.71	4210	1939	65000	1.90	
0.81	3830	1713	65000	2.1	MDK107R57DS71S4
0.89	3480	1554	65000	2.3	MDKF107R57DS71S4
1.0	2990	1336	65000	2.7	MDKA107R57DS71S4
1.2	2610	1166	65000	3.1	MDKAF107R57DS71S4
0.65	4860	2123	40000	0.90	
0.74	4270	1856	40000	1.00	
0.85	3670	1625	40000	1.15	MDK97R57DS71S4
0.96	3200	1430	40000	1.35	MDKF97R57DS71S4
1.1	2900	1261	40000	1.50	MDKA97R57DS71S4
1.2	2540	1102	40000	1.70	MDKAF97R57DS71S4
1.4	2220	957	40000	1.95	
1.6	1990	855	40000	2.2	

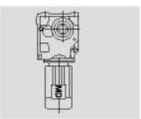

n_a [1/min]	M_a [Nm]	i	F_{Ra} [N]	f_B	typ motoreduktora *gearmotor type*
0.37kW					
1.9	1640	743	40000	2.6	MDK97R57DS71S4 MDKF97R57DS71S4 MDKA97R57DS71S4 MDKAF97R57DS71S4
2.1	1450	652	40000	3.0	
2.4	1310	573	40000	3.3	
0.97	3250	1415	26500	0.85	MDK87R57DS71S4 MDKF87R57DS71S4 MDKA87R57DS71S4 MDKAF87R57DS71S4
1.1	2820	1229	27100	0.95	
1.3	2470	1078	27600	1.10	
1.5	2150	951	27900	1.25	
1.6	1880	837	28200	1.45	
1.9	1630	726	28400	1.65	
2.2	1440	638	28500	1.85	
2.5	1260	562	28600	2.2	
2.6	1060	474	28800	2.6	
3.2	950	426	28800	2.8	
3.7	830	373	28900	3.2	
1.7	1890	815	7450	0.8	MDK77R37DS71S4 MDKF77R37DS71S4 MDKA77R37DS71S4 MDKAF77R37DS71S4
2.0	1590	709	15100	0.95	
2.2	1400	622	16400	1.10	
2.5	1250	552	17200	1.25	
2.8	1100	485	17900	1.4	
3.2	970	428	18400	1.60	
3.8	840	367	18900	1.85	
4.2	750	328	19100	2.1	
4.8	665	290	19400	2.3	
5.5	570	252	19600	2.7	
6.2	500	221	19700	3.1	
7.1	445	195	19800	3.5	
7.9	390	175	19900	4.0	
9.0	345	154	19900	4.5	
3.3	950	420	8130	0.85	MDK67R37DS71S4 MDKF67R37DS71S4 MDKA67R37DS71S4 MDKAF67R37DS71S4
3.8	840	361	10200	1.00	
4.3	745	323	10900	1.1	
4.9	630	279	11700	1.30	
5.6	555	246	12100	1.50	
6.3	495	217	12400	1.65	
7.2	435	191	12700	1.90	
8.3	375	166	12900	2.2	
9.6	330	144	13000	2.5	
11	280	122	13000	2.9	
4.9	635	280	7350	0.95	MDK57R37DS71S4 MDKF57R37DS71S4 MDKA57R37DS71S4 MDKAF57R37DS71S4
5.6	555	246	7980	1.10	
6.4	490	215	8460	1.2	
7.2	435	192	8720	1.40	
8.3	380	166	8980	1.60	
9.6	330	145	9170	1.85	
11	300	129	9290	2.0	
12	255	111	9460	2.4	
14	225	97	9560	2.7	

n_a [1/min]	M_a [Nm]	i	F_{Ra} [N]	f_B	typ motoreduktora *gearmotor type*
0.37kW					
3.9	910	174.19	28800	3.0	MDK87D90S8 MDKF87D90S8 MDKA87D90S8 MDKAF87D90S8
4.1	850	164.34	28900	3.2	
4.6	765	147.32	28900	3.5	
4.6	775	197.37	28900	3.5	MDK87DS71M6 MDKF87DS71M6 MDKA87DS71M6 MDKAF87DS71M6
5.2	685	174.19	28900	4.0	
5.0	705	135.28	19300	2.2	MDK77D90S8 MDKF77D90S8 MDKA77D90S8 MDKAF77D90S8
5.3	670	128.52	19300	2.3	
6.0	590	113.56	19500	2.6	
7.0	505	97.05	19700	3.1	
5.8	605	154.02	19500	2.6	MDK77DS71M6 MDKF77DS71M6 MDKA77DS71M6 MDKAF77DS71M6
6.7	530	135.28	19600	2.9	
7.0	505	128.52	19700	3.1	
7.9	445	113.56	19800	3.5	
7.2	490	192.18	19700	3.0	MDK77DS71S4 MDKF77DS71S4 MDKA77DS71S4 MDKAF77DS71S4
7.7	460	179.37	19800	3.2	
9.0	395	154.02	19900	3.9	
6.3	560	108.03	12100	1.45	MDK67D90S8 MDKF67D90S8 MDKA67D90S8 MDKAF67D90S8
6.6	535	102.62	12300	1.55	
7.6	470	90.04	12600	1.75	
7.3	485	123.54	12500	1.70	MDK67DS71M6 MDKF67DS71M6 MDKA67DS71M6 MDKAF67DS71M6
8.3	425	108.03	12700	1.95	
8.8	405	102.62	12800	2.0	
10	355	90.04	13000	2.3	
9.5	370	144.79	12900	2.2	MDK67DS71S4 MDKF67DS71S4 MDKA67DS71S4 MDKAF67DS71S4
11	315	123.54	13000	2.6	
13	275	108.03	13000	3.0	
15	230	90.04	13000	3.6	
18	196	76.37	13000	4.2	
7.3	485	123.85	8490	1.25	MDK57DS71M6 MDKF57DS71M6 MDKA57DS71M6 MDKAF57DS71M6
8.3	425	108.29	8770	1.40	
8.8	405	102.88	8870	1.50	
10	355	90.26	9070	1.70	
12	300	76.56	9280	2.0	
13	270	69.12	9390	2.2	
9.5	370	145.14	9000	1.60	MDK57DS71S4 MDKF57DS71S4 MDKA57DS71S4 MDKAF57DS71S4
11	315	123.85	9220	1.90	
13	275	108.29	9370	2.2	
13	265	102.88	9420	2.3	
15	230	90.26	9530	2.6	
18	196	76.56	9650	3.1	
20	177	69.12	9700	3.4	

n_a [1/min]	M_a [Nm]	i	F_{Ra} [N]	f_B	typ motoreduktora *gearmotor type*
0.37kW					
8.6	410	104.37	5490	1.00	MDK47DS71M6
9.9	355	90.86	6480	1.10	MDKF47DS71M6
11	335	85.12	6730	1.20	MDKA47DS71M6
12	295	75.20	7100	1.35	MDKAF47DS71M6
10	340	131.87	6690	1.20	MDK47DS71S4
11	310	121.48	6960	1.30	MDKF47DS71S4
13	265	104.37	7330	1.50	MDKA47DS71S4
					MDKAF47DS71S4
15	235	90.86	7580	1.70	
16	220	85.12	7670	1.85	MDK47DS71S4
18	193	75.20	7810	2.1	MDKF47DS71S4
20	179	69.84	7880	2.2	MDKA47DS71S4
22	162	63.30	7960	2.5	MDKAF47DS71S4
14	250	97.81	2520	0.80	
16	215	83.69	5470	0.95	
19	186	72.54	5690	1.10	
20	174	67.80	5630	1.15	
24	150	58.60	5510	1.35	
28	128	49.79	5350	1.55	
31	114	44.46	5230	1.75	
36	97	37.97	5060	2.1	
39	91	35.57	4990	2.2	
46	77	29.96	4800	2.6	
48	74	28.83	4750	2.7	
55	64	24.99	4590	3.1	MDK37DS71S4
59	60	23.36	4510	3.3	MDKF37DS71S4
68	52	20.19	4350	3.6	MDKA37DS71S4
80	44	17.15	4160	4.1	MDKAF37DS71S4
90	39	15.31	4040	4.5	
105	34	13.08	3860	4.9	
114	31	12.14	3780	5.1	
132	27	10.49	3630	6.0	
155	23	8.91	3460	7.0	
173	20	7.96	3350	7.6	
203	17	6.80	3190	8.6	
217	16	6.37	3130	8.9	
257	14	5.36	2970	10	
0.55kW					
0.08	55000	16978	190000	0.90	
0.10	46200	14272	190000	1.10	MDK187R97DS71M4
1.10	42000	13116	190000	1.20	MDKF187R97DS71M4
0.12	36700	11647	190000	1.35	MDKA187R97DS71M4
0.19	23800	7343	190000	2.1	MDKAF187R97DS71M4
0.12	37500	11573	150000	0.85	
0.13	33300	10264	150000	0.95	MDK167R97DS71M4
0.16	27900	8628	150000	1.15	MDKF167R97DS71M4
0.21	21200	6562	150000	1.50	MDKA167R97DS71M4
0.25	16900	5355	150000	1.9	MDKAF167R97DS71M4
0.33	13100	4079	150000	2.5	

n_a [1/min]	M_a [Nm]	i	F_{Ra} [N]	f_B	typ motoreduktora *gearmotor type*
0.55kW					
0.20	22300	6881	109700	0.80	MDK157R97DS71S4
0.23	19200	5931	111600	0.95	MDKF157R97DS71S4
0.34	12900	3979	114400	1.40	MDKA157R97DS71S4
0.45	9880	3051	115300	1.80	MDKAF157R97DS71S4
0.31	14900	4423	76100	0.85	
0.35	13100	3889	79100	1.00	MDK127R77DS71S4
0.41	11100	3311	80200	1.20	MDKF127R77DS71S4
0.45	10000	3009	80700	1.30	MDKA127R77DS71S4
0.52	8590	2607	81200	1.50	MDKAF127R77DS71S4
0.71	6620	1926	81900	1.95	
0.77	6040	1757	82100	2.2	MDK127R77DS71S4
0.88	5270	1541	82200	2.5	MDKF127R77DS71S4
1.0	4610	1342	82400	2.8	MDKA127R77DS71S4
1.2	4020	1177	82500	3.2	MDKAF127R77DS71S4
1.3	3520	1025	82600	3.7	
0.46	10100	2977	65000	0.80	MDK107R77DS71M4
0.52	8830	2599	65000	0.90	MDKF107R77DS71M4
0.59	7720	2286	65000	1.05	MDKA107R77DS71M4
0.70	6540	1939	65000	1.25	MDKAF107R77DS71M4
0.79	5920	1713	65000	1.35	
0.87	5370	1554	65000	1.50	
1.0	4610	1336	65000	1.75	
1.2	4030	1166	65000	2.0	MDK107R77DS71M4
1.3	3460	1030	65000	2.3	MDKF107R77DS71M4
1.5	3010	904	65000	2.7	MDKA107R77DS71M4
1.7	2730	793	65000	2.9	MDKAF107R77DS71M4
2.0	2380	696	65000	3.4	
2.2	2050	615	65000	3.9	
0.95	4940	1430	40000	0.85	
1.1	4440	1261	40000	0.95	
1.2	3870	1102	40000	1.1	
1.4	3400	957	40000	1.25	
1.6	3040	855	40000	1.4	MDK97R57DS71M4
1.8	2550	743	40000	1.7	MDKF97R57DS71M4
2.1	2250	652	40000	1.9	MDKA97R57DS71M4
2.4	2020	573	40000	2.1	MDKAF97R57DS71M4
2.7	1720	504	40000	2.5	
3.1	1480	437	40000	2.9	
3.6	1320	382	40000	3.3	
4.5	1070	305	40000	4.0	
1.4	3300	951	26400	0.8	
1.6	2890	837	27000	0.95	
1.9	2510	726	27500	1.10	
2.1	2220	638	27800	1.2	MDK87R57DS71M4
2.4	1940	562	28100	1.40	MDKF87R57DS71M4
2.9	1640	474	28400	1.65	MDKA87R57DS71M4
3.2	1470	426	28500	1.85	MDKAF87R57DS71M4
3.6	1290	373	28600	2.1	
4.1	1130	330	28700	2.4	

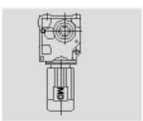

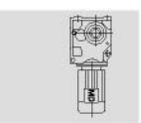

n_a [1/min]	M_a [Nm]	i	F_{Ra} [N]	f_B	typ motoreduktora *gearmotor type*
0.55kW					
4.6	1010	294	28800	2.7	MDK87R57DS71M4 MDKF87R57DS71M4 MDKA87R57DS71M4 MDKAF87R57DS71M4
5.4	870	250	28800	3.1	
5.8	820	236	28900	3.3	
6.8	695	201	28900	3.9	
2.5	1900	552	5780	0.8	MDK77R37DS71M4 MDKF77R37DS71M4 MDKA77R37DS71M4 MDKAF77R37DS71M4
2.8	1690	485	14300	0.90	
3.2	1490	428	15800	1.05	
3.7	1290	367	17000	1.20	
4.2	1150	328	17700	1.35	
4.7	1020	290	18200	1.50	
5.4	880	252	18700	1.75	
6.2	770	221	19100	2.0	
7.0	680	195	19300	2.3	
7.8	605	175	19500	2.6	
8.8	535	154	19600	2.9	
4.9	970	279	6400	0.85	MDK67R37DS71M4 MDKF67R37DS71M4 MDKA67R37DS71M4 MDKAF67R37DS71M4
5.5	850	246	9990	0.95	
6.2	760	217	10800	1.10	
7.1	670	191	11500	1.25	
8.2	575	166	12000	1.40	
9.4	505	144	12400	1.60	
11	430	122	12700	1.90	
7.1	670	192	4080	0.90	MDK57R37DS71M4 MDKF57R37DS71M4 MDKA57R37DS71M4 MDKAF57R37DS71M4
8.2	580	166	7800	1.05	
9.4	510	145	8360	1.20	
11	455	129	8630	1.30	
12	390	111	8930	1.55	
14	340	97	9120	1.75	
3.9	1350	174.19	28600	2.0	MDK87D90L8 MDKF87D90L8 MDKA87D90L8 MDKAF87D90L8
4.1	1270	164.34	28600	2.1	
4.6	1140	147.32	28700	2.4	
4.6	1150	197.37	28700	2.3	MDK87DS80S6 MDKF87DS80S6 MDKA87DS80S6 MDKAF87DS80S6
5.2	1020	174.19	28800	2.7	
5.5	960	164.34	28800	2.8	
6.1	860	147.32	28900	3.1	
5.0	1040	135.28	18100	1.50	MDK77D90L8 MDKF77D90L8 MDKA77D90L8 MDKAF77D90L8
5.3	990	128.52	18300	1.55	
6.0	880	113.56	18700	1.75	
7.0	750	97.05	19100	2.1	
5.8	900	154.02	18700	1.70	MDK77DS80S6 MDKF77DS80S6 MDKA77DS80S6 MDKAF77DS80S6
6.7	790	135.28	19000	1.95	
7.0	750	128.52	19100	2.1	
7.9	665	113.56	19400	2.3	
8.8	595	154.02	19500	2.6	MDK77DS71M4 MDKF77DS71M4 MDKA77DS71M4 MDKAF77DS71M4
10	520	135.28	19700	3.0	
11	495	128.52	19700	3.1	
12	440	113.56	19800	3.5	
14	375	97.05	19900	4.1	

n_a [1/min]	M_a [Nm]	i	F_{Ra} [N]	f_B	typ motoreduktora *gearmotor type*
0.55kW					
7.3	720	123.54	11100	1.15	MDK67DS80S6 MDKF67DS80S6 MDKA67DS80S6 MDKAF67DS80S6
8.3	630	108.03	11700	1.30	
8.8	600	102.62	11900	1.35	
10	525	90.04	12300	1.55	
12	445	76.37	12600	1.85	
11	475	123.54	12500	1.70	MDK67DS71M4 MDKF67DS71M4 MDKA67DS71M4 MDKAF67DS71M4
13	415	108.03	12800	1.95	
15	350	90.04	13000	2.4	
18	295	76.37	13000	2.8	
8.3	630	108.29	7360	0.95	MDK57DS80S6 MDKF57DS80S6 MDKA57DS80S6 MDKAF57DS80S6
8.8	600	102.88	7630	1.00	
10	525	90.26	8220	1.15	
12	445	76.56	8670	1.35	
13	405	69.12	8870	1.50	
15	355	60.81	9070	1.70	
16	335	57.42	9150	1.80	
11	480	123.85	8520	1.25	MDK57DS71M4 MDKF57DS71M4 MDKA57DS71M4 MDKAF57DS71M4
13	420	108.29	8800	1.45	
13	395	102.88	8890	1.50	
15	350	90.26	9100	1.70	
18	295	76.56	9300	2.0	
20	265	69.12	9410	2.3	
22	235	60.81	9520	2.6	
24	220	57.42	9560	2.7	
13	405	104.37	5880	1.00	MDK47DS71M4 MDKF47DS71M4 MDKA47DS71M4 MDKAF47DS71M4
15	350	90.86	6550	1.15	
16	330	85.12	6790	1.20	
18	290	75.20	7150	1.40	
19	270	69.84	7310	1.50	
21	245	63.30	7500	1.65	MDK47DS71M4 MDKF47DS71M4 MDKA47DS71M4 MDKAF47DS71M4
24	220	56.83	7660	1.80	
28	189	48.95	7830	2.1	
30	178	46.03	7880	2.2	
23	225	58.60	4850	0.90	MDK37DS71M4 MDKF37DS71M4 MDKA37DS71M4 MDKAF37DS71M4
27	192	49.79	4790	1.05	
31	172	44.46	4740	1.15	
36	147	37.97	4640	1.35	
38	137	35.57	4600	1.45	
45	116	29.96	4470	1.75	
47	111	28.83	4440	1.80	
54	97	24.99	4320	2.1	
58	90	23.36	4260	2.2	
67	78	20.19	4130	2.4	
79	66	17.15	3980	2.7	
89	59	15.31	3880	3.0	
104	51	13.08	3730	3.3	
112	47	12.14	3660	3.4	
130	41	10.49	3520	4.0	
153	34	8.91	3370	4.7	
171	31	7.96	3270	5.1	

n_a [1/min]	M_a [Nm]	i	F_{Ra} [N]	f_B	typ motoreduktora *gearmotor type*
0.55kW					
200	26	6.80	3130	5.7	MDK37DS71M4
214	25	6.37	3070	5.9	MDKF37DS71M4
254	21	5.36	2920	6.8	MDKA37DS71M4
342	15	3.98	2680	8.1	MDKAF37DS71M4
0.75kW					
0.11	58000	13116	190000	0.85	MDK187R97DS80S4 MDKH187R97DS80S4
0.12	50900	11647	190000	1.00	
0.19	32700	7343	190000	1.55	
0.20	29900	6747	190000	1.65	
0.23	26200	5991	190000	1.90	
0.16	38500	8628	150000	0.85	MDK167R97DS80S4 MDKH167R97DS80S4
0.21	29300	6562	150000	1.10	
0.26	23400	5355	150000	1.35	
0.34	18100	4079	150000	1.75	
0.41	15100	3376	150000	2.1	
0.35	17700	3979	112300	1.00	MDK157R97DS80S4 MDKF157R97DS80S4 MDKA157R97DS80S4 MDKAF157R97DS80S4
0.45	13600	3051	114100	1.30	
0.83	7490	1659	115900	2.4	MDK157R97DS80S4 MDKF157R97DS80S4 MDKA157R97DS80S4 MDKAF157R97DS80S4
1.0	6040	1365	116200	3.0	
0.42	15100	3311	75700	0.85	MDK127R77DS80S4 MDKF127R77DS80S4 MDKA127R77DS80S4 MDKAF127R77DS80S4
0.46	13700	3009	78600	0.95	
0.53	11800	2607	79800	1.10	
0.72	9010	1926	81100	1.45	MDK127R77DS80S4 MDKF127R77DS80S4 MDKA127R77DS80S4 MDKAF127R77DS80S4
0.79	8220	1757	81400	1.60	
0.90	7180	1541	81700	1.8	
1.0	6280	1342	82000	2.1	
1.2	5480	1177	82200	2.4	
1.4	4790	1025	82300	2.7	
1.5	4190	899	82500	3.1	
0.81	8040	1713	65000	1.00	MDK107R77DS80S4 MDKF107R77DS80S4 MDKA107R77DS80S4 MDKAF107R77DS80S4
0.89	7300	1554	65000	1.10	
1.0	6270	1336	65000	1.30	
1.2	5470	1166	65000	1.45	
1.3	4740	1030	65000	1.70	
1.5	4130	904	65000	1.95	
1.7	3710	793	65000	2.2	
2.0	3240	696	65000	2.5	
2.2	2810	615	65000	2.8	
1.2	5240	1102	39600	0.8	MDK97R57DS80S4 MDKF97R57DS80S4 MDKA97R57DS80S4 MDKAF97R57DS80S4
1.4	4600	957	40000	0.95	
1.6	4110	855	40000	1.05	
1.9	3470	743	40000	1.25	
2.1	3050	652	40000	1.40	
2.4	2740	573	40000	1.55	
2.7	2350	504	40000	1.85	

n_a [1/min]	M_a [Nm]	i	F_{Ra} [N]	f_B	typ motoreduktora *gearmotor type*
0.75kW					
3.2	2010	437	40000	2.1	MDK97R57DS80S4 MDKF97R57DS80S4 MDKA97R57DS80S4 MDKAF97R57DS80S4
3.6	1770	382	40000	2.4	
4.5	1420	305	40000	3.0	
5.4	1190	258	40000	3.5	
5.9	1080	232	40000	3.9	
6.9	920	199	40000	4.6	
1.9	3370	726	26300	0.80	MDK87R57DS80S4 MDKF87R57DS80S4 MDKA87R57DS80S4 MDKAF87R57DS80S4
2.2	2970	638	26900	0.90	
2.5	2610	562	27400	1	
2.9	2200	474	27900	1.2	
3.2	1980	426	28100	1.35	
3.7	1720	373	28300	1.55	
4.2	1520	330	28500	1.75	
4.7	1350	294	28600	1.95	
5.5	1160	250	28700	2.3	
5.8	1100	236	28700	2.4	
6.9	930	201	28800	2.9	
3.8	1740	367	13900	0.90	MDK77R37DS80S4 MDKF77R37DS80S4 MDKA77R37DS80S4 MDKAF77R37DS80S4
4.2	1550	328	15400	1.00	
4.8	1380	290	16500	1.15	
5.5	1190	252	17500	1.30	
6.2	1040	221	18100	1.50	
3.9	1830	176.05	40000	2.3	MDK97D100M8 MDKF97D100M8 MDKA97D100M8 MDKAF97D100M8
4.5	1590	153.21	40000	2.7	
4.9	1460	140.28	40000	3.0	
4.7	1530	147.32	28500	1.75	MDK87D100M8 MDKF87D100M8 MDKA87D100M8 MDKAF87D100M8
5.4	1320	126.91	28600	2.1	
6.0	1200	115.82	28700	2.3	
6.7	1070	102.71	28700	2.5	
5.2	1390	174.19	28600	1.95	MDK87DS80M6 MDKF87DS80M6 MDKA87DS80M6 MDKAF87DS80M6
5.5	1310	164.34	28600	2.1	
6.1	1170	147.32	28700	2.3	
7.1	1010	126.91	28800	2.7	
7.0	1020	197.37	28800	2.6	MDK87DS80S4 MDKF87DS80S4 MDKA87DS80S4 MDKAF87DS80S4
7.9	900	174.19	28800	3.0	
8.4	850	164.34	28900	3.2	
9.4	765	147.32	28900	3.5	
6.7	1080	135.28	18000	1.45	MDK77DS80M6 MDKF77DS80M6 MDKA77DS80M6 MDKAF77DS80M6
7.0	1020	128.52	18200	1.50	
7.9	900	113.56	18700	1.70	
9.3	770	97.05	19100	2.0	
10	710	88.97	19200	2.2	
9.0	800	154.02	19000	1.95	MDK77DS80S4 MDKF77DS80S4 MDKA77DS80S4 MDKAF77DS80S4
10	700	135.28	19300	2.2	
11	665	128.52	19300	2.3	
12	590	113.56	19500	2.6	
14	505	97.05	19700	3.1	

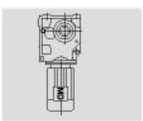

n_a [1/min]	M_a [Nm]	i	F_{Ra} [N]	f_B	typ motoreduktora *gearmotor type*
0.75kW					
11	640	123.54	11700	1.30	MDK67DS80S4 MDKF67DS80S4 MDKA67DS80S4 MDKAF67DS80S4
13	560	108.03	12100	1.45	
15	465	90.04	12600	1.75	
18	395	76.37	12800	2.1	MDK67DS80S4 MDKF67DS80S4 MDKA67DS80S4 MDKAF67DS80S4
20	360	68.95	13000	2.3	
23	315	60.66	13000	2.6	
24	295	57.28	13000	2.8	
11	645	123.85	7130	0.95	MDK57DS80S4 MDKF57DS80S4 MDKA57DS80S4 MDKAF57DS80S4
13	560	108.29	7940	1.05	
13	535	102.88	8160	1.10	
15	470	90.26	8570	1.30	
18	395	76.56	8890	1.50	
20	360	69.12	9060	1.65	
23	315	60.81	9230	1.90	
24	300	57.42	9290	2.0	
28	255	48.89	9450	2.4	
31	230	44.43	9530	2.6	
18	390	75.20	6060	1.00	MDK47DS80S4 MDKF47DS80S4 MDKA47DS80S4 MDKAF47DS80S4
20	365	69.84	6410	1.10	
22	330	63.30	6790	1.20	
24	295	56.83	7110	1.35	MDK47DS80S4 MDKF47DS80S4 MDKA47DS80S4 MDKAF47DS80S4
28	255	48.95	7430	1.55	
30	240	46.03	7540	1.65	
35	205	39.61	7740	1.95	
39	184	35.39	7760	2.2	
44	162	31.30	7550	2.5	
31	230	44.46	4170	0.85	MDK37DS80S4 MDKF37DS80S4 MDKA37DS80S4 MDKAF37DS80S4
36	197	37.97	4150	1.00	
39	185	35.57	4140	1.10	
46	156	29.96	4080	1.30	
48	150	28.83	4060	1.35	
55	130	24.99	3990	1.55	
59	121	23.36	3950	1.60	
68	105	20.19	3860	1.75	
80	89	17.15	3750	2.0	
90	80	15.31	3670	2.2	
105	68	13.08	3550	2.4	
114	63	12.14	3500	2.5	
132	54	10.49	3380	2.9	
155	46	8.91	3250	3.5	
173	41	7.96	3160	3.8	
203	35	6.80	3030	4.3	
217	33	6.37	2980	4.4	
257	28	5.36	2840	5.0	
347	21	3.98	2620	6.0	

n_a [1/min]	M_a [Nm]	i	F_{Ra} [N]	f_B	typ motoreduktora *gearmotor type*
1.1kW					
0.15	59700	9363	190000	0.85	MDK187R97DS80M4 MDKH187R97DS80M4
0.17	51100	8126	190000	1.00	
0.19	48400	7343	190000	1.05	
0.21	44200	6747	190000	1.15	
0.23	39000	5991	190000	1.30	
0.26	34500	5358	190000	1.45	
0.29	30700	4817	190000	1.65	
0.32	27900	4370	190000	1.8	
0.26	34800	5355	150000	0.90	MDK167R97DS80M4 MDKH167R97DS80M4
0.29	30800	4788	150000	1.05	
0.34	26700	4079	150000	1.20	
0.41	22300	3376	150000	1.45	
0.51	17900	2755	150000	1.80	
0.64	14600	2182	150000	2.2	MDK167R97DS80M4 MDKH167R97DS80M4
0.82	11300	1704	150000	2.8	
0.99	9390	1408	150000	3.4	
1.1	8600	1296	150000	3.7	
0.40	22700	3516	109500	0.80	MDK157R97DS80M4 MDKF157R97DS80M4 MDKA157R97DS80M4 MDKAF157R97DS80M4
0.46	20100	3051	111100	0.90	
0.54	16700	2610	112800	1.1	
0.60	14800	2322	113600	1.20	
0.84	11100	1659	115000	1.65	MDK157R97DS80M4 MDKF157R97DS80M4 MDKA157R97DS80M4 MDKAF157R97DS80M4
1.0	8980	1365	115600	2.0	
1.1	8010	1229	115800	2.3	
1.3	7130	1093	116000	2.5	
1.5	6150	942	116100	2.9	
1.6	5510	854	116200	3.3	
0.73	13200	1926	79100	1.00	MDK127R77DS80M4 MDKF127R77DS80M4 MDKA127R77DS80M4 MDKAF127R77DS80M4
0.80	12000	1757	79700	1.10	
0.91	10500	1541	80500	1.25	
1.0	9170	1342	81000	1.4	
1.2	8020	1177	81400	1.6	
1.4	7010	1025	81800	1.85	
1.6	6130	899	82000	2.1	
1.8	5280	790	82200	2.5	
2.0	4780	704	82300	2.7	
2.3	4110	610	82500	3.2	
2.5	3710	549	82500	3.5	
2.9	3190	477	82600	4.1	
1.2	7990	1166	65000	1.00	MDK107R77DS80M4 MDKF107R77DS80M4 MDKA107R77DS80M4 MDKAF107R77DS80M4
1.4	6960	1030	65000	1.15	
1.5	6080	904	65000	1.30	
1.8	5420	793	65000	1.50	
2.0	4740	696	65000	1.70	
2.3	4140	615	65000	1.95	
2.7	3510	522	65000	2.3	
3.0	3090	461	65000	2.6	
3.4	2720	408	65000	2.9	
3.8	2470	364	65000	3.2	
4.4	2160	318	65000	3.7	

n_a [1/min]	M_a [Nm]	i	F_{Ra} [N]	f_B	typ motoreduktora *gearmotor type*
1.1kW					
1.9	5070	743	39900	0.85	MDK97R57DS80M4 MDKF97R57DS80M4 MDKA97R57DS80M4 MDKAF97R57DS80M4
2.2	4460	652	40000	0.95	
2.4	3990	573	40000	1.10	
2.8	3430	504	40000	1.25	
3.2	2970	437	40000	1.45	
3.7	2620	382	40000	1.65	
4.1	2320	342	40000	1.85	
3.0	3250	474	26500	0.85	MDK87R57DS80M4 MDKF87R57DS80M4 MDKA87R57DS80M4 MDKAF87R57DS80M4
3.3	2920	426	27000	0.90	
3.8	2570	373	27400	1.05	
4.2	2250	330	27800	1.20	
4.8	2010	294	28000	1.35	
5.6	1730	250	28300	1.55	
5.9	1630	236	28400	1.65	
7.0	1390	201	28600	1.95	
3.9	2720	176.05	40000	1.55	MDK97D100L8 MDKF97D100L8 MDKA97D100L8 MDKAF97D100L8
4.4	2370	153.21	40000	1.80	
4.8	2170	140.28	40000	1.95	
5.5	1910	123.93	40000	2.2	
5.2	2010	176.05	40000	2.1	MDK97D90L6 MDKF97D90L6 MDKA97D90L6 MDKAF97D90L6
6.0	1750	153.21	40000	2.5	
6.6	1600	140.28	40000	2.7	
7.4	1420	123.93	40000	3.0	
7.9	1320	176.05	40000	3.3	MDK97DS80M4 MDKF97DS80M4 MDKA97DS80M4 MDKAF97DS80M4
9.1	1150	153.21	40000	3.7	
10	1050	140.28	40000	4.1	
5.3	1990	174.19	28100	1.35	MDK87DS90L6 MDKF87DS90L6 MDKA87DS90L6 MDKAF87DS90L6
5.6	1880	164.34	28200	1.45	
6.2	1680	147.32	28300	1.60	
7.2	1450	126.91	28500	1.85	
8.0	1310	174.19	28600	2.1	MDK87DS80M4 MDKF87DS80M4 MDKA87DS80M4 MDKAF87DS80M4
8.5	1230	164.34	28700	2.2	
9.5	1110	147.32	28700	2.4	
11	950	126.91	28800	2.8	
12	870	115.82	28800	3.1	
6.8	1540	135.28	15400	1.00	MDK77DS90L6 MDKF77DS90L6 MDKA77DS90L6 MDKAF77DS90L6
7.2	1470	128.52	15900	1.05	
8.1	1300	113.56	17000	1.20	
9.5	1110	97.05	17900	1.40	
10	1020	135.28	18300	1.55	MDK77DS80M4 MDKF77DS80M4 MDKA77DS80M4 MDKAF77DS80M4
11	960	128.52	18400	1.60	
12	850	113.56	18800	1.80	
14	730	97.05	19200	2.1	MDK77DS80M4 MDKF77DS80M4 MDKA77DS80M4 MDKAF77DS80M4
16	670	88.97	19300	2.3	
18	585	78.07	19500	2.7	
19	555	73.99	19600	2.8	

n_a [1/min]	M_a [Nm]	i	F_{Ra} [N]	f_B	typ motoreduktora *gearmotor type*
1.1kW					
13	810	108.03	10400	1.00	MDK67DS80M4 MDKF67DS80M4 MDKA67DS80M4 MDKAF67DS80M4
14	770	102.62	10700	1.05	
16	675	90.04	11400	1.20	
18	575	76.37	12000	1.45	
20	515	68.95	12300	1.60	
23	455	60.66	12600	1.80	MDK67DS80M4 MDKF67DS80M4 MDKA67DS80M4 MDKAF67DS80M4
24	430	57.28	12700	1.90	
29	365	48.77	12900	2.2	
32	335	44.32	13000	2.5	
36	290	38.39	13000	2.8	
16	675	90.26	7410	0.90	MDK57DS80M4 MDKF57DS80M4 MDKA57DS80M4 MDKAF57DS80M4
18	575	76.56	7840	1.05	
20	520	69.12	8280	1.15	
23	455	60.81	8630	1.30	
24	430	57.42	8750	1.40	
29	365	48.89	9020	1.65	
32	335	44.43	9160	1.80	
36	290	38.49	9330	2.1	MDK57DS80M4 MDKF57DS80M4 MDKA57DS80M4 MDKAF57DS80M4
39	270	35.70	9400	2.2	
46	225	30.28	9540	2.6	
51	205	27.34	9510	2.9	
58	181	24.05	9220	3.3	
62	170	22.71	9090	3.5	
72	145	19.34	8720	4.0	
80	132	17.57	8510	4.2	
92	114	15.22	8180	4.7	
106	99	13.25	7880	5.1	
117	90	11.92	7570	4.6	
124	85	11.26	7450	4.9	
146	72	9.59	7120	5.6	
161	65	8.71	6930	6.0	
186	57	7.55	6650	6.5	
213	49	6.57	6380	7.0	
298	35	4.69	5770	8.5	
25	425	56.83	3310	0.95	MDK47DS80M4 MDKF47DS80M4 MDKA47DS80M4 MDKAF47DS80M4
29	365	48.95	6360	1.10	
30	345	46.03	6610	1.15	
35	295	39.61	7090	1.35	MDK47DS80M4 MDKF47DS80M4 MDKA47DS80M4 MDKAF47DS80M4
40	265	35.39	7090	1.50	
45	235	31.30	6960	1.70	
48	220	29.32	6890	1.80	
54	194	25.91	6730	2.1	
64	164	21.81	6510	2.4	
72	147	19.58	6360	2.7	
47	225	29.96	3420	0.90	MDK37DS80M4 MDKF37DS80M4 MDKA37DS80M4 MDKAF37DS80M4
56	188	24.99	3440	1.05	
60	175	23.36	3440	1.10	
69	152	20.19	3420	1.20	
82	129	17.15	3370	1.40	
91	115	15.31	3330	1.50	
107	98	13.08	3260	1.70	
115	91	12.14	3220	1.75	

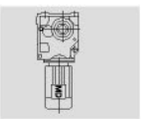

n_a [1/min]	M_a [Nm]	i	F_{Ra} [N]	f_B	typ motoreduktora *gearmotor type*
1.1kW					
133	79	10.49	3140	2.0	MDK37DS80M4 MDKF37DS80M4 MDKA37DS80M4 MDKAF37DS80M4
157	67	8.91	3040	2.4	
176	60	7.96	2970	2.6	
206	51	6.80	2870	2.9	
220	48	6.37	2830	3.0	
261	40	5.36	2720	3.5	
352	30	3.98	2520	4.2	
1.5kW					
0.21	60800	6747	190000	0.80	MDK187R97DS90M4 MDKH187R97DS90M4
0.24	53600	5991	190000	0.95	
0.26	47600	5358	190000	1.05	
0.29	42500	4817	190000	1.2	
0.32	38600	4370	190000	1.30	
0.39	33100	3609	190000	1.50	MDK187R97DS90M4 MDKH187R97DS90M4
0.46	28000	3062	190000	1.80	
0.56	22800	2519	190000	2.2	
0.62	20400	2268	190000	2.5	
0.35	36700	4079	150000	0.85	MDK167R97DS90M4 MDKH167R97DS90M4
0.42	30500	3376	150000	1.05	
0.51	24700	2755	150000	1.30	
0.65	20000	2182	150000	1.60	MDK167R97DS90M4 MDKH167R97DS90M4
0.83	15500	1704	150000	2.1	
1.0	12900	1408	150000	2.5	
1.1	11800	1296	150000	2.7	
0.61	20500	2322	110800	0.9	MDK157R97DS90M4 MDKF157R97DS90M4 MDKA157R97DS90M4 MDKAF157R97DS90M4
0.85	15200	1659	113500	1.20	MDK157R97DS90M4 MDKF157R97DS90M4 MDKA157R97DS90M4 MDKAF157R97DS90M4
1.0	12400	1365	114600	1.45	
1.1	11100	1229	115000	1.65	
1.3	9840	1093	115300	1.85	
1.5	8480	942	115700	2.1	
1.6	7630	854	115900	2.4	
2.5	5010	567	116300	3.6	
2.8	4460	504	116400	4.0	
2.6	4830	536	82300	2.7	MDK127R87DS90M4 MDKF127R87DS90M4 MDKA127R87DS90M4 MDKAF127R87DS90M4
3.4	3800	418	82500	3.4	
3.8	3350	367	82600	3.9	
0.80	16400	1757	73400	0.80	MDK127R77DS90M4 MDKF127R77DS90M4 MDKA127R77DS90M4 MDKAF127R77DS90M4
0.91	14300	1541	77500	0.90	
1.0	12500	1342	79500	1.05	
1.2	10900	1177	80300	1.20	
1.4	9550	1025	80900	1.35	
1.6	8360	899	81400	1.55	
1.8	7240	790	81700	1.80	
2.0	6520	704	81900	2.0	
2.3	5620	610	82200	2.3	

n_a [1/min]	M_a [Nm]	i	F_{Ra} [N]	f_B	typ motoreduktora *gearmotor type*
1.5kW					
2.6	5080	549	82300	2.6	MDK127R77DS90M4 MDKF127R77DS90M4 MDKA127R77DS90M4 MDKAF127R77DS90M4
3.0	4370	477	82400	3.0	
3.4	3870	418	82500	3.4	
1.4	9520	1030	65000	0.85	MDK107R77DS90M4 MDKF107R77DS90M4 MDKA107R77DS90M4 MDKAF107R77DS90M4
1.6	8320	904	65000	0.95	
1.8	7390	793	65000	1.10	
2.0	6470	696	65000	1.25	
2.3	5670	615	65000	1.40	
2.7	4810	522	65000	1.65	
3.1	4230	461	65000	1.90	
3.5	3740	408	65000	2.1	
3.9	3370	364	65000	2.4	
4.4	2940	318	65000	2.7	
2.5	5420	573	39400	0.80	MDK97R57DS90M4 MDKF97R57DS90M4 MDKA97R57DS90M4 MDKAF97R57DS90M4
2.8	4680	504	40000	0.9	
3.2	4050	437	40000	1.05	
3.7	3570	382	40000	1.20	
4.1	3160	342	40000	1.35	
4.6	2880	305	40000	1.50	
5.5	2430	258	40000	1.75	
6.1	2190	232	40000	1.95	
7.1	1870	199	40000	2.3	
4.3	3070	330	26800	0.90	MDK87R57DS90M4 MDKF87R57DS90M4 MDKA87R57DS90M4 MDKAF87R57DS90M4
4.8	2750	294	27300	1.00	
5.6	2360	250	27700	1.15	
6.0	2230	236	29700	1.2	
7.0	1890	201	28200	1.45	
7.7	1720	183	28300	1.55	
4.9	2940	143.47	65000	2.7	MDK107D112M8 MDKF107D112M8 MDKA107D112M8 MDKAF107D112M8
5.8	2490	121.46	65000	3.2	
6.2	2300	112.41	65000	3.5	
4.6	3140	153.21	40000	1.35	MDK97D112M8 MDKF97D112M8 MDKA97D112M8 MDKAF97D112M8
5.0	2870	140.28	40000	1.50	
5.7	2540	123.93	40000	1.70	
5.2	2740	176.05	40000	1.55	MDK97DS100M6 MDKF97DS100M6 MDKA97DS100M6 MDKAF97DS100M6
6.0	2390	153.21	40000	1.80	
6.6	2180	140.28	40000	1.95	
7.4	1930	123.93	40000	2.2	
8.0	1790	176.05	40000	2.4	MDK97DS90M4 MDKF97DS90M4 MDKA97DS90M4 MDKAF97DS90M4
9.2	1560	153.21	40000	2.8	
10	1430	140.28	40000	3.0	
11	1260	123.93	40000	3.4	
6.2	2290	147.32	27800	1.20	MDK87DS100M6 MDKF87DS100M6 MDKA87DS100M6 MDKAF87DS100M6
7.2	1980	126.91	28100	1.35	
7.9	1800	115.82	28200	1.50	
9.0	1600	102.71	28400	1.70	

n_a [1/min]	M_a [Nm]	i	F_{Ra} [N]	f_B	typ motoreduktora *gearmotor type*
1.5kW					
8.1	1770	174.19	28300	1.55	MDK87DS90M4 MDKF87DS90M4 MDKA87DS90M4 MDKAF87DS90M4
8.6	1670	164.34	28300	1.60	
9.6	1500	147.32	28500	1.80	
11	1290	126.91	28600	2.1	
12	1180	115.82	28700	2.3	
14	1040	102.71	28800	2.6	
16	880	86.34	28800	3.1	
8.1	1770	113.56	13600	0.90	MDK77DS100M6 MDKF77DS100M6 MDKA77DS100M6 MDKAF77DS100M6
9.5	1510	97.05	15700	1.05	
10	1390	88.97	16400	1.10	
12	1220	78.07	17400	1.30	
10	1370	135.28	16500	1.15	MDK77DS90M4 MDKF77DS90M4 MDKA77DS90M4 MDKAF77DS90M4
11	1310	128.52	16900	1.20	
12	1150	113.56	17700	1.35	
15	990	97.05	18400	1.55	
16	900	88.97	18700	1.70	
18	795	78.07	19000	1.95	MDK77DS90M4 MDKF77DS90M4 MDKA77DS90M4 MDKAF77DS90M4
19	750	73.99	19100	2.1	
22	660	64.75	19400	2.4	
24	595	58.34	19500	2.6	
28	520	51.18	19700	3.0	
31	460	45.16	19800	3.4	
35	405	40.04	19800	3.8	
16	910	90.04	9370	0.90	MDK67DS90M4 MDKF67DS90M4 MDKA67DS90M4 MDKAF67DS90M4
18	775	76.37	10700	1.05	
20	700	68.95	11300	1.15	
23	615	60.66	11800	1.35	
25	580	57.28	12000	1.40	
29	495	48.77	12400	1.65	
32	450	44.32	12600	1.80	MDK67DS90M4 MDKF67DS90M4 MDKA67DS90M4 MDKAF67DS90M4
37	390	38.39	12800	2.1	
40	360	35.62	12900	2.3	
47	305	30.22	13000	2.7	
52	275	27.28	13000	3.0	
59	245	24.00	13000	3.3	
23	620	60.81	7480	0.95	MDK57DS90M4 MDKF57DS90M4 MDKA57DS90M4 MDKAF57DS90M4
25	585	57.42	7770	1.05	
29	495	48.89	8430	1.20	
32	450	44.43	8650	1.35	
37	390	38.49	8920	1.55	MDK57DS90M4 MDKF57DS90M4 MDKA57DS90M4 MDKAF57DS90M4
39	365	35.70	9040	1.65	
47	310	30.28	9190	1.95	
52	280	27.34	9010	2.2	
59	245	24.05	8780	2.5	
62	230	22.71	8670	2.6	
73	196	19.34	8360	2.9	
36	400	39.61	5890	1.00	MDK47DS90M4 MDKF47DS90M4 MDKA47DS90M4 MDKAF47DS90M4
40	360	35.39	6360	1.10	
45	320	31.30	6310	1.25	

n_a [1/min]	M_a [Nm]	i	F_{Ra} [N]	f_B	typ motoreduktora *gearmotor type*
1.5kW					
48	300	29.32	6270	1.35	MDK47DS90M4 MDKF47DS90M4 MDKA47DS90M4 MDKAF47DS90M4
54	265	25.91	6190	1.50	
65	220	21.81	6050	1.80	
72	199	19.58	5950	2.0	
84	171	16.86	5800	2.2	
89	161	15.86	5730	2.4	
103	139	13.65	5560	2.6	
116	124	12.19	5430	2.8	
120	120	11.77	5340	2.3	
60	235	23.36	2860	0.80	MDK37DS90M4 MDKF37DS90M4 MDKA37DS90M4 MDKAF37DS90M4
70	205	20.19	2920	0.90	
82	174	17.15	2940	1.05	
92	156	15.31	2950	1.10	
108	133	13.08	2930	1.25	
116	123	12.14	2920	1.30	
134	107	10.49	2880	1.50	
158	91	8.91	2820	1.75	
177	81	7.96	2770	1.90	
207	69	6.80	2700	2.2	
221	65	6.37	2670	2.2	
263	55	5.36	2580	2.6	
354	40	3.98	2420	31	
2.2kW					
0.32	57700	4370	190000	0.85	MDK187R97DS90L4 MDKH187R97DS90L4
0.50	36400	2818	190000	1.35	
0.39	49000	3609	190000	1.00	MDK187R97DS90L4 MDKH187R97DS90L4
0.46	41600	3062	190000	1.20	
0.56	34000	2519	190000	1.45	
0.62	30400	2268	190000	1.65	
0.69	27400	2054	190000	1.80	
0.77	24200	1821	190000	2.1	
0.88	21400	1605	190000	2.3	
0.51	36700	2755	150000	0.85	MDK167R97DS90L4 MDKH167R97DS90L4
0.62	29500	2263	150000	1.05	
0.65	29600	2182	150000	1.10	MDK167R97DS90L4 MDKH167R97DS90L4
0.83	23100	1704	150000	1.40	
1.0	19100	1408	150000	1.65	
1.1	17500	1296	150000	1.8	
1.3	14600	1101	150000	2.2	
1.5	12600	944	150000	2.5	
0.85	22500	1659	109700	0.80	MDK157R97DS90L4 MDKF157R97DS90L4 MDKA157R97DS90L4 MDKAF157R97DS90L4
1.0	18400	1365	112000	1.00	
1.1	16500	1229	112900	1.10	
1.3	14700	1093	113700	1.25	
1.5	12700	942	114500	1.4	
1.6	11400	854	114900	1.60	
1.9	9880	756	115300	1.80	
2.6	7200	536	81700	1.80	MDK127R87DS90L4 MDKF127R87DS90L4 MDKA127R87DS90L4 MDKAF127R87DS90L4
3.0	6300	473	82000	2.1	
3.4	5670	418	82200	2.3	
3.8	4970	367	82300	2.6	
4.3	4460	330	82400	2.9	

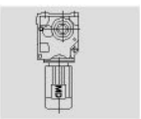

n_a [1/min]	M_a [Nm]	i	F_{Ra} [N]	f_B	typ motoreduktora *gearmotor type*
2.2kW					
1.4	14100	1025	77800	0.9	
1.6	12300	899	79500	1.05	
1.8	10700	790	80400	1.20	MDK127R77DS90L4
2.0	9640	704	80800	1.35	MDKF127R77DS90L4
2.3	8330	610	81300	1.55	MDKA127R77DS90L4
2.6	7510	549	81600	1.75	MDKAF127R77DS90L4
3.0	6490	477	81900	2.0	
3.4	5720	418	82100	2.3	
2.3	8390	615	65000	0.95	
2.7	7120	522	65000	1.10	
3.1	6270	461	65000	1.30	MDK107R77DS90L4
3.5	5540	408	65000	1.45	MDKF107R77DS90L4
3.9	4980	364	65000	1.60	MDKA107R77DS90L4
4.4	4350	318	65000	1.85	MDKAF107R77DS90L4
4.9	3910	286	65000	2.00	
5.6	3430	251	65000	2.3	
3.7	5260	382	39600	0.80	
4.1	4680	342	40000	0.95	MDK97R57DS90L4
4.6	4240	305	40000	1.00	MDKF97R57DS90L4
5.5	3580	258	40000	1.20	MDKA97R57DS90L4
6.1	3220	232	40000	1.35	MDKAF97R57DS90L4
7.1	2760	199	40000	1.55	
4.9	4310	143.47	65000	1.85	MDK107D132S8
5.8	3650	121.46	65000	2.2	MDKF107D132S8
6.2	3370	112.41	65000	2.4	MDKA107D132S8
6.9	3020	100.75	65000	2.7	MDKAF107D132S8
6.1	3420	153.21	40000	1.25	MDK97DS100L6
6.7	3140	140.28	40000	1.35	MDKF97DS100L6
7.6	2770	123.93	40000	1.55	MDKA97DS100L6
8.9	2350	105.13	40000	1.85	MDKAF97DS100L6
8.0	2620	176.05	40000	1.65	MDK97DS90L4
9.2	2280	153.21	40000	1.90	MDKF97DS90L4
10	2090	140.28	40000	2.1	MDKA97DS90L4
11	1850	123.93	40000	2.3	MDKAF97DS90L4
					MDK97DS90L4
13	1570	105.13	40000	2.8	MDKF97DS90L4
15	1440	96.80	40000	3.0	MDKA97DS90L4
					MDKAF97DS90L4
9.6	2200	147.32	27900	1.25	MDK87DS90L4
11	1890	126.91	28200	1.45	MDKF87DS90L4
12	1730	115.82	28300	1.65	MDKA87DS90L4
					MDKAF87DS90L4
14	1530	102.71	28500	1.75	
16	1290	86.34	28600	2.1	MDK87DS90L4
18	1180	79.34	28700	2.3	MDKF87DS90L4
20	1050	70.46	28800	2.6	MDKA87DS90L4
22	940	63.00	28800	2.9	MDKAF87DS90L4
12	1690	113.56	14300	0.90	MDK77DS90L4
15	1450	97.05	16100	1.05	MDKF77DS90L4
16	1330	88.97	16800	1.15	MDKA77DS90L4
18	1160	78.07	17600	1.35	MDKAF77DS90L4

n_a [1/min]	M_a [Nm]	i	F_{Ra} [N]	f_B	typ motoreduktora *gearmotor type*
2.2kW					
19	1100	73.99	17900	1.40	MDK77DS90L4 MDKF77DS90L4 MDKA77DS90L4
22	960	64.75	18400	1.60	MDKAF77DS90L4
24	870	58.34	18800	1.80	
28	765	51.18	19100	2.0	
31	675	45.16	19300	2.3	MDK77DS90L4
35	595	40.04	19500	2.6	MDKF77DS90L4
40	525	35.20	19700	3.0	MDKA77DS90L4
46	460	30.89	19800	3.4	MDKAF77DS90L4
48	435	29.27	19800	3.6	
55	380	25.62	19800	4.1	
23	900	60.66	9490	0.90	
25	850	57.28	10000	0.95	
29	725	48.77	11100	1.15	MDK67DS90L4
32	660	44.32	11500	1.25	MDKF67DS90L4
37	570	38.39	12100	1.40	MDKA67DS90L4
40	530	35.62	12300	1.55	MDKAF67DS90L4
47	450	30.22	12600	1.80	
52	405	27.28	12800	2.0	
59	360	24.00	13000	2.2	
62	340	22.66	13000	2.3	
73	285	19.30	13000	2.6	
80	260	17.54	13000	2.8	
93	225	15.19	13000	3.1	MDK67DS90L4
107	197	13.22	13000	3.4	MDKF67DS90L4
113	186	12.48	13000	2.9	MDKA67DS90L4
133	158	10.63	13000	3.2	MDKAF67DS90L4
146	144	9.66	13000	3.3	
169	125	8.37	13000	3.5	
194	109	7.28	12700	3.9	
271	78	5.2	11700	4.5	
32	660	44.43	5100	0.90	MDK57DS90L4
37	575	38.49	7850	1.05	MDKF57DS90L4
39	530	35.70	8180	1.15	MDKA57DS90L4
47	450	30.28	8250	1.35	MDKAF57DS90L4
52	405	27.34	8160	1.45	
59	360	24.05	8030	1.65	
62	340	22.71	7970	1.75	
73	290	19.34	7760	2.0	MDK57DS90L4
80	260	17.57	7630	2.1	MDKF57DS90L4
93	225	15.22	7430	2.4	MDKA57DS90L4
106	197	13.25	7220	2.6	MDKAF57DS90L4
118	178	11.92	6890	2.3	
125	168	11.26	6810	2.5	
54	385	25.91	5260	1.05	MDK47DS90L4
65	325	21.81	5260	1.25	MDKF47DS90L4
72	290	19.58	5240	1.35	MDKA47DS90L4 MDKAF47DS90L4
84	250	16.86	5190	1.50	MDK47DS90L4
89	235	15.86	5160	1.60	MDKF47DS90L4
103	205	13.65	5070	1.75	MDKA47DS90L4
116	182	12.19	4990	1.95	MDKAF47DS90L4

n_a [1/min]	M_a [Nm]	i	F_{Ra} [N]	f_B	typ motoreduktora *gearmotor type*
2.2kW					
120	175	11.77	4890	1.60	MDK47DS90L4 MDKF47DS90L4 MDKA47DS90L4 MDKAF47DS90L4
133	157	10.56	4810	1.80	
155	136	9.10	4690	2.1	
108	195	13.08	2370	0.85	MDK37DS90L4 MDKF37DS90L4 MDKA37DS90L4 MDKAF37DS90L4
134	156	10.49	2430	1.00	
158	133	8.91	2440	1.20	
177	119	7.96	2430	1.30	
207	101	6.80	2410	1.50	
221	95	6.37	2400	1.55	
263	80	5.36	2350	1.75	
354	59	3.98	2250	2.1	
3.0kW					
0.50	50800	2818	190000	1.00	MDK187R97DS100M4 MDKH187R97DS100M4
0.46	57500	3062	190000	0.85	MDK187R97DS100M4 MDKH187R97DS100M4
0.56	47100	2519	190000	1.05	
0.62	42200	2268	190000	1.20	
0.68	38100	2054	190000	1.30	
0.77	33600	1821	190000	1.50	
0.87	29800	1605	190000	1.70	
1.0	25500	1395	190000	1.95	
1.2	22100	1196	190000	2.3	
0.82	31900	1704	150000	1.00	MDK167R97DS100M4 MDKH167R97DS100M4
0.99	26400	1408	150000	1.20	
1.1	24300	1296	150000	1.3	
1.2	20300	1101	150000	1.55	
1.5	17500	944	150000	1.85	
1.7	15400	843	150000	2.1	
1.9	13900	757	150000	2.3	
1.1	22900	1229	109300	0.80	MDK157R97DS100M4 MDKF157R97DS100M4 MDKA157R97DS100M4 MDKAF157R97DS100M4
1.3	20400	1093	110900	0.90	
1.5	17600	942	112400	1.05	
1.6	15800	854	113200	1.15	
1.9	13800	756	114000	1.30	
2.5	10500	567	115200	1.65	
2.8	9310	504	115500	1.95	
2.6	9980	536	80700	1.30	MDK127R87DS100M4 MDKF127R87DS100M4 MDKA127R87DS100M4 MDKAF127R87DS100M4
3.0	8760	473	81200	1.50	
3.3	7870	418	81500	1.70	
3.8	6880	367	81800	1.90	
4.2	6170	330	82000	2.1	
4.9	5300	287	82200	2.5	
1.8	14800	790	76300	0.90	MDK127R77DS100M4 MDKF127R77DS100M4 MDKA127R77DS100M4 MDKAF127R77DS100M4
2.0	13300	704	79000	1.00	
2.3	11500	610	80000	1.15	
2.5	10400	549	80500	1.25	
2.9	8970	477	81100	1.45	
3.3	7900	418	81500	1.65	
3.0	8660	461	65000	0.9	MDK107R77DS100M4 MDKF107R77DS100M4 MDKA107R77DS100M4 MDKAF107R77DS100M4
3.4	7660	408	65000	1.05	
3.8	6870	364	65000	1.15	

n_a [1/min]	M_a [Nm]	i	F_{Ra} [N]	f_B	typ motoreduktora *gearmotor type*
3.0kW					
4.4	6000	318	65000	1.35	MDK107R77DS100M4 MDKF107R77DS100M4 MDKA107R77DS100M4 MDKAF107R77DS100M4
4.9	5400	286	65000	1.50	
5.6	4730	251	65000	1.70	
6.3	4170	222	65000	1.9	
7.1	3690	196	65000	2.2	
8.1	3300	174	65000	2.2	
9.1	2920	154	65000	2.5	
10	2650	140	65000	2.7	
5.4	4930	258	40000	0.85	MDK97R57DS100M4 MDKF97R57DS100M4 MDKA97R57DS100M4 MDKAF97R57DS100M4
6.0	4440	232	40000	0.95	
7.0	3810	199	40000	1.15	
5.0	5710	143.47	65000	1.40	MDK107D132M8 MDKF107D132M8 MDKA107D132M8 MDKAF107D132M8
5.9	4830	121.46	65000	1.65	
6.4	4470	112.41	65000	1.80	
7.2	4010	100.75	65000	2.0	
7.9	3620	90.96	65000	2.2	
6.6	4370	143.47	65000	1.85	MDK107DS112M6 MDKF107DS112M6 MDKA107DS112M6 MDKAF107DS112M6
7.7	3700	121.46	65000	2.2	
8.4	3430	112.41	65000	2.3	
9.3	3070	100.75	65000	2.6	
9.8	2940	143.47	65000	2.7	MDK107DS100M4 MDKF107DS100M4 MDKA107DS100M4 MDKAF107DS100M4
12	2490	121.46	65000	3.2	
7.6	3780	123.93	40000	1.15	MDK97DS112M6 MDKF97DS112M6 MDKA97DS112M6 MDKAF97DS112M6
8.9	3200	105.13	40000	1.35	
9.7	2950	96.80	40000	1.45	
11	2640	86.52	40000	1.65	
7.9	3600	176.05	40000	1.20	MDK97DS100M4 MDKF97DS100M4 MDKA97DS100M4 MDKAF97DS100M4
9.1	3140	153.21	40000	1.35	
10	2870	140.28	40000	1.50	
11	2540	123.93	40000	1.70	
13	2150	105.13	40000	2.0	MDK97DS100M4 MDKF97DS100M4 MDKA97DS100M4 MDKAF97DS100M4
14	1980	96.80	40000	2.2	
16	1770	86.52	40000	2.4	
18	1590	77.89	40000	2.7	
20	1440	70.54	40000	3.0	
22	1280	62.55	40000	3.4	
25	1160	56.55	40000	3.7	
9.5	3010	147.32	26900	0.90	MDK87DS100M4 MDKF87DS100M4 MDKA87DS100M4 MDKAF87DS100M4
11	2600	126.91	27400	1.05	
12	2370	115.82	27700	1.15	
14	2100	102.71	28000	1.30	
16	1770	86.34	28300	1.55	MDK87DS100M4 MDKF87DS100M4 MDKA87DS100M4 MDKAF87DS100M4
18	1620	79.34	28400	1.65	
20	1440	70.46	28500	1.85	

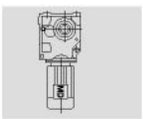

n_a [1/min]	M_a [Nm]	i	F_{Ra} [N]	f_B	typ motoreduktora *gearmotor type*
3.0kW					
22	1290	63.00	28600	2.1	MDK87DS100M4 MDKF87DS100M4 MDKA87DS100M4 MDKAF87DS100M4
25	1160	56.64	28700	2.3	
28	1010	49.16	28800	2.7	
32	900	44.02	28800	2.9	
38	745	36.52	28400	3.4	
16	1820	88.97	13100	0.85	MDK77DS100M4 MDKF77DS100M4 MDKA77DS100M4 MDKAF77DS100M4
18	1600	78.07	15000	0.95	
19	1510	73.99	15600	1.00	
22	1330	64.75	16800	1.15	
24	1190	58.34	17500	1.30	
27	1050	51.18	18100	1.50	
31	920	45.16	18600	1.70	MDK77DS100M4 MDKF77DS100M4 MDKA77DS100M4 MDKAF77DS100M4
35	820	40.04	18900	1.90	
40	720	35.20	19200	2.2	
45	630	30.89	19400	2.5	
32	910	44.32	9450	0.90	MDK67DS100M4 MDKF67DS100M4 MDKA67DS100M4 MDKAF67DS100M4
36	785	38.39	10600	1.00	
39	730	35.62	11100	1.15	
46	620	30.22	11800	1.35	
51	560	27.28	12100	1.45	
58	490	24.00	12500	1.65	
62	465	22.66	12600	1.70	MDK67DS100M4 MDKF67DS100M4 MDKA67DS100M4 MDKAF67DS100M4
73	395	19.30	12800	1.95	
80	360	17.54	13000	2.1	
92	310	15.19	13000	2.3	
106	270	13.22	13000	2.5	
112	255	12.48	13000	2.1	
132	220	10.63	13000	2.3	
145	198	9.66	13000	2.4	
46	620	30.28	7180	0.95	MDK57DS100M4 MDKF57DS100M4 MDKA57DS100M4 MDKAF57DS100M4
51	560	27.34	7190	1.05	
58	490	24.05	7180	1.20	
62	465	22.71	7160	1.30	MDK57DS100M4 MDKF57DS100M4 MDKA57DS100M4 MDKAF57DS100M4
72	395	19.34	7080	1.45	
80	360	17.57	7020	1.55	
92	310	15.22	6890	1.70	
106	270	13.25	6750	1.90	
117	245	11.92	6420	1.70	
124	230	11.26	6370	1.80	
146	196	9.59	6200	2.1	
161	178	8.71	6090	2.2	
186	154	7.55	5920	2.4	
213	134	6.57	5750	2.6	
298	96	4.69	5320	3.1	
72	400	19.58	4430	1.00	MDK47DS100M4 MDKF47DS100M4 MDKA47DS100M4 MDKAF47DS100M4
83	345	16.86	4490	1.10	
88	325	15.86	4500	1.15	
103	280	13.65	4510	1.30	
115	250	12.19	4490	1.40	
119	240	11.77	4370	1.15	
133	215	10.56	4350	1.30	

n_a [1/min]	M_a [Nm]	i	F_{Ra} [N]	f_B	typ motoreduktora *gearmotor type*
3.0kW					
154	186	9.10	4290	1.50	MDK47DS100M4 MDKF47DS100M4 MDKA47DS100M4 MDKAF47DS100M4
164	175	8.56	4270	1.55	
190	151	7.36	4190	1.65	
213	135	6.58	4120	1.80	
241	119	5.81	4030	1.95	
302	95	4.64	3860	2.2	
157	182	8.91	2000	0.90	MDK37DS100M4 MDKF37DS100M4 MDKA37DS100M4 MDKAF37DS100M4
176	163	7.96	2040	0.95	
206	139	6.80	2080	1.10	
220	130	6.37	2080	1.10	
261	110	5.36	2090	1.30	
352	81	3.98	2050	1.55	
4.0kW					
1.7	20100	835	190000	2.5	MDK187R107DS112M4
2.7	12600	520	190000	4.0	MDKH187R107DS112M4
0.56	62200	2519	168800	0.80	MDK187R97DS112M4 MDKH187R97DS112M4
0.63	55900	2268	180200	0.90	
0.69	50500	2054	189400	1.00	
0.78	44600	1821	190000	1.10	
0.88	39400	1605	190000	1.25	
1.0	33900	1395	190000	1.5	
1.2	29300	1196	190000	1.70	
1.4	25600	1046	190000	1.95	
1.5	23100	945	190000	2.2	
1.0	34900	1408	150000	0.90	MDK167R97DS112M4 MDKH167R97DS112M4
1.1	32100	1296	150000	1.00	
1.3	26900	1101	150000	1.20	
1.5	23200	944	150000	1.40	
1.7	20500	843	150000	1.55	
1.9	18500	757	150000	1.75	
2.2	15500	632	150000	2.1	
1.7	21000	854	110600	0.85	MDK157R97DS112M4 MDKF157R97DS112M4 MDKA157R97DS112M4 MDKAF157R97DS112M4
1.9	18300	756	112000	1.00	
2.5	13900	567	114000	1.30	
2.8	12300	504	114600	1.45	
3.3	10500	434	115100	1.70	
2.7	13200	536	79100	1.00	MDK127R87DS112M4 MDKF127R87DS112M4 MDKA127R87DS112M4 MDKAF127R87DS112M4
3.0	11600	473	79900	1.10	
3.4	10400	418	80600	1.25	
3.9	9090	367	81100	1.45	
4.3	8160	330	81400	1.60	
5.0	7020	287	81800	1.85	
5.6	6210	253	82000	2.1	
2.3	15200	610	75800	0.85	MDK127R77DS112M4 MDKF127R77DS112M4 MDKA127R77DS112M4 MDKAF127R77DS112M4
2.6	13700	549	78800	0.95	
3.0	11800	477	79800	1.10	
3.4	10400	418	80500	1.25	
3.9	9050	364	65000	0.90	MDK107R77DS112M4 MDKF107R77DS112M4 MDKA107R77DS112M4 MDKAF107R77DS112M4
4.5	7910	318	65000	1.00	
5.0	7120	286	65000	1.1	
5.7	6240	251	65000	1.30	
6.4	5500	222	65000	1.45	
7.2	4870	196	65000	1.65	
8.2	4360	174	65000	1.65	
9.2	3860	154	65000	1.85	
10	3500	140	65000	2.1	
7.1	5020	199	39900	0.85	MDK97R57DS112M4 MDKF97R57DS112M4 MDKA97R57DS112M4 MDKAF97R57DS112M4

n_a [1/min]	M_a [Nm]	i	F_{Ra} [N]	f_B	typ motoreduktora *gearmotor type*
4.0kW					
5.3	7220	136.14	81700	1.80	MDK127D132ML8 MDKF127D132ML8 MDKA127D132ML8 MDKAF127D132ML8
5.9	6500	122.48	81900	2.0	
6.5	5850	110.18	82100	2.2	
6.6	5810	146.07	82100	2.2	MDK127DS132S6 MDKF127DS132S6 MDKA127DS132S6 MDKAF127DS132S6
7.1	5420	136.14	82200	2.4	
7.8	4870	122.48	82300	2.7	
8.7	4380	110.18	82400	3.0	
6.4	5960	112.41	65000	1.35	MDK107D132ML8 MDKF107D132ML8 MDKA107D132ML8 MDKAF107D132ML8
7.2	5340	100.75	65000	1.50	
7.9	4830	90.96	65000	1.65	
8.7	4380	82.61	65000	1.85	
6.7	5710	143.47	65000	1.40	MDK107DS132S6 MDKF107DS132S6 MDKA107DS132S6 MDKAF107DS132S6
7.9	4830	121.46	65000	1.65	
8.5	4470	112.41	65000	1.80	
9.5	4010	100.75	65000	2.0	
11	3620	90.96	65000	2.2	
9.9	3860	143.47	65000	2.1	MDK107DS112M4 MDKF107DS112M4 MDKA107DS112M4 MDKAF107DS112M4
12	3270	121.46	65000	2.5	
13	3020	112.41	65000	2.7	
14	2710	100.75	65000	3.0	
16	2450	90.96	65000	3.3	
17	2220	82.61	65000	3.6	
19	1970	73.30	65000	4.1	
9.3	4120	153.21	40000	1.05	MDK97DS112M4 MDKF97DS112M4 MDKA97DS112M4 MDKAF97DS112M4
10	3770	140.28	40000	1.15	
11	3330	123.93	40000	1.30	
14	2830	105.13	40000	1.50	MDK97DS112M4 MDKF97DS112M4 MDKA97DS112M4 MDKAF97DS112M4
15	2600	96.80	40000	1.65	
16	2330	86.52	40000	1.85	
18	2100	77.89	40000	2.1	
20	1900	70.54	40000	2.3	
12	3120	115.82	26700	0.85	MDK87DS112M4 MDKF87DS112M4 MDKA87DS112M4 MDKAF87DS112M4
14	2760	102.71	27200	1.00	
16	2320	86.34	27700	1.15	
18	2130	79.34	27900	1.25	
20	1900	70.46	28200	1.40	MDK87DS112M4 MDKF87DS112M4 MDKA87DS112M4 MDKAF87DS112M4
23	1690	63.00	28300	1.60	
25	1520	56.64	28500	1.75	
29	1320	49.16	28600	2.0	
32	1180	44.02	28300	2.2	
39	980	36.52	27300	2.5	
22	1740	64.75	13900	0.90	MDK77DS112M4 MDKF77DS112M4 MDKA77DS112M4 MDKAF77DS112M4
24	1570	58.34	15200	1.00	
28	1380	51.18	16500	1.15	
31	1210	45.16	17400	1.30	
35	1080	40.04	18000	1.45	
37	1030	38.39	18200	1.45	

n_a [1/min]	M_a [Nm]	i	F_{Ra} [N]	f_B	typ motoreduktora *gearmotor type*
4.0kW					
40	950	35.20	18500	1.65	MDK77DS112M4 MDKF77DS112M4 MDKA77DS112M4 MDKAF77DS112M4
46	830	30.89	18900	1.85	
49	785	29.27	19000	1.95	
55	690	25.62	19300	2.3	
62	620	23.08	19500	2.5	
70	545	20.25	19600	2.8	
47	810	30.22	10400	1.00	MDK67DS112M4 MDKF67DS112M4 MDKA67DS112M4 MDKAF67DS112M4
52	735	27.28	11000	1.10	
59	645	24.00	11600	1.25	
63	610	22.66	11800	1.30	
74	520	19.30	12300	1.45	MDK67DS112M4 MDKF67DS112M4 MDKA67DS112M4 MDKAF67DS112M4
81	470	17.54	12500	1.55	
94	410	15.19	12800	1.70	
107	355	13.22	13000	1.90	
114	335	12.48	13000	1.60	
134	285	10.63	13000	1.75	
147	260	9.66	12900	1.85	
170	225	8.37	12500	1.95	
195	196	7.28	12100	2.1	
273	140	5.20	11200	2.5	
59	645	24.05	6120	0.95	MDK57DS112M4 MDKF57DS112M4 MDKA57DS112M4 MDKAF57DS112M4
63	610	22.71	6160	1.00	
73	520	19.34	6220	1.10	
81	475	17.57	6230	1.15	
93	410	15.22	6210	1.30	
107	355	13.25	6510	1.45	
119	320	11.92	5810	1.30	
126	305	11.26	5790	1.35	
148	260	9.59	5700	1.55	
163	235	8.71	5640	1.65	
188	205	7.55	5530	1.80	
216	177	6.57	5400	1.95	
303	126	4.69	5070	2.4	
5.5kW					
0.79	61300	1821	190000	0.80	MDK187R97DS132S4 MDKH187R97DS132S4
0.89	54200	1605	190000	0.90	
1.0	46700	1395	190000	1.05	
1.2	40300	1196	190000	1.25	
1.4	35200	1046	190000	1.4	
1.5	31700	945	190000	1.60	
1.9	24800	738	190000	2.0	
2.3	20800	621	190000	2.4	
1.3	37100	1101	150000	0.85	MDK167R97DS132S4 MDKH167R97DS132S4
1.5	31900	944	150000	1.00	
1.7	28200	843	150000	1.15	
1.9	25400	757	150000	1.25	
2.3	21300	632	150000	1.50	
2.5	18700	561	150000	1.70	
3.0	16200	481	150000	2.0	
3.4	14100	423	150000	2.3	

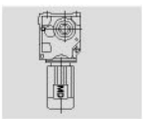

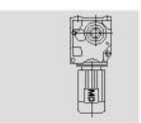

n_a [1/min]	M_a [Nm]	i	F_{Ra} [N]	f_B	typ motoreduktora *gearmotor type*
5.5kW					
2.2	22000	661	109900	0.80	MDK157R97DS132S4 MDKF157R97DS132S4 MDKA157R97DS132S4 MDKAF157R97DS132S4
2.5	19100	567	111700	0.95	
2.8	17000	504	112700	1.05	
3.3	14500	434	113800	1.25	
3.8	12600	379	114500	1.45	
4.3	11100	333	115000	1.60	
3.4	14300	418	77400	0.90	MDK127R87DS132S4 MDKF127R87DS132S4 MDKA127R87DS132S4 MDKAF127R87DS132S4
3.9	12500	367	79500	1.05	
4.3	11200	330	80100	1.15	
5.0	9650	287	80800	1.35	
5.6	8540	253	81300	1.5	
6.7	7170	213	81700	1.8	
7.1	6830	200	81800	1.75	
8.6	5660	166	82100	2.1	
9.8	4990	147	82300	2.4	
6.4	7540	222	65000	1.05	MDK107R77DS132S4 MDKF107R77DS132S4 MDKA107R77DS132S4 MDKAF107R77DS132S4
7.3	6680	196	65000	1.20	
8.2	5970	174	65000	1.3	
9.3	5280	154	65000	1.35	
10	4800	140	65000	1.5	
4.7	11100	150.41	115000	1.60	MDK157D160M8 MDKF157D160M8 MDKA157D160M8 MDKAF157D160M8
5.8	9050	122.39	115500	2.0	
7.1	7410	100.22	115900	2.4	
7.8	6780	91.65	116000	2.7	
5.2	10100	136.14	80700	1.30	MDK127D160M8 MDKF127D160M8 MDKA127D160M8 MDKAF127D160M8
5.8	9060	122.48	81100	1.45	
6.4	8150	110.18	81400	1.60	
7.9	6650	89.89	81900	1.95	
7.1	7450	136.14	81600	1.75	MDK127DS160S6 MDKF127DS160S6 MDKA127DS160S6 MDKAF127DS160S6
7.8	6700	122.48	81900	1.95	
8.7	6030	110.18	82100	2.2	
11	4920	89.89	82300	2.6	
8.5	6150	122.41	65000	1.30	MDK107DS160S6 MDKF107DS160S6 MDKA107DS160S6 MDKAF107DS160S6
9.5	5510	100.75	65000	1.45	
11	4980	90.96	65000	1.60	
12	4520	82.61	65000	1.75	
10	5270	143.47	65000	1.50	MDK107DS132S4 MDKF107DS132S4 MDKA107DS132S4 MDKAF107DS132S4
12	4460	121.46	65000	1.80	
13	4130	112.41	65000	1.95	
14	3700	100.75	65000	2.2	
16	3340	90.96	65000	2.4	
17	3030	82.61	65000	2.6	
12	4550	123.93	40000	0.95	MDK97DS132S4 MDKF97DS132S4 MDKA97DS132S4 MDKAF97DS132S4
14	3860	105.13	40000	1.10	
15	3560	96.80	40000	1.20	
17	3180	86.52	40000	1.35	

n_a [1/min]	M_a [Nm]	i	F_{Ra} [N]	f_B	typ motoreduktora *gearmotor type*
5.5kW					
18	2860	77.89	40000	1.50	MDK97DS132S4 MDKF97DS132S4 MDKA97DS132S4 MDKAF97DS132S4
20	2590	70.54	40000	1.65	
23	2300	62.55	40000	1.85	
25	2080	56.55	39700	2.1	
30	1760	47.93	38600	2.4	
17	3170	86.34	26600	0.85	MDK87DS132S4 MDKF87DS132S4 MDKA87DS132S4 MDKAF87DS132S4
18	2910	79.34	27000	0.95	
20	2590	70.46	27400	1.05	
23	2310	63.00	27500	1.15	
25	2080	56.64	27300	1.30	
29	1810	49.16	26900	1.50	MDK87DS132S4 MDKF87DS132S4 MDKA87DS132S4 MDKAF87DS132S4
32	1620	44.02	26500	1.60	
39	1340	36.52	25800	1.85	
46	1150	31.39	25200	2.3	
51	1020	27.88	24700	2.5	
32	1660	45.16	14600	0.95	MDK77DS132S4 MDKF77DS132S4 MDKA77DS132S4 MDKAF77DS132S4
36	1470	40.04	15900	1.05	
46	1130	30.89	17800	1.35	
49	1070	29.27	18000	1.45	
56	940	25.62	18500	1.65	
62	850	23.08	18800	1.85	MDK77DS132S4 MDKF77DS132S4 MDKA77DS132S4 MDKAF77DS132S4
71	745	20.25	19100	2.0	
80	655	17.87	19400	2.2	
90	580	15.84	19200	2.4	
106	495	13.52	18600	2.7	
116	455	12.36	17900	2.2	
132	400	10.84	17400	2.5	
60	880	24.00	9720	0.90	MDK67DS132S4 MDKF67DS132S4 MDKA67DS132S4 MDKAF67DS132S4
63	830	22.66	10200	0.95	
74	710	19.30	11200	1.05	
82	645	17.54	11600	1.15	
94	560	15.19	12100	1.25	
108	485	13.22	12500	1.40	
115	460	12.48	12600	1.15	MDK67DS132S4 MDKF67DS132S4 MDKA67DS132S4 MDKAF67DS132S4
135	390	10.63	12400	1.30	
148	355	9.66	12200	1.35	
171	305	8.37	11900	1.45	
196	265	7.28	11600	1.55	
275	191	5.20	10800	1.85	
7.5kW					
1.7	38200	835	190000	1.30	MDK187R107DS132M4 MDKH187R107DS132M4
2.0	33200	729	190000	1.50	
2.3	28300	622	190000	1.75	
1.2	55200	1196	190000	0.90	MDK187R97DS132S4 MDKH187R97DS132S4
1.4	48200	1046	190000	1.05	
1.5	43500	945	190000	1.15	
1.9	34000	738	190000	1.45	
2.3	28600	621	190000	1.75	
2.7	24200	527	190000	2.1	

n_a [1/min]	M_a [Nm]	i	F_{Ra} [N]	f_B	typ motoreduktora *gearmotor type*
7.5kW					
1.7	38700	843	150000	0.85	MDK167R97DS132M4 MDKH167R97DS132M4
1.9	34900	757	150000	0.90	
2.3	29200	632	150000	1.10	
2.5	25600	561	150000	1.25	
3.0	22200	481	150000	1.45	
3.4	19400	423	150000	1.65	
3.9	16900	369	150000	1.90	
3.3	19900	434	111200	0.90	MDK157R97DS132M4 MDKF157R97DS132M4 MDKA157R97DS132M4 MDKAF157R97DS132M4
3.8	17400	379	112500	1.05	
4.3	15300	333	113500	1.20	
4.9	13300	291	114200	1.35	
4.3	15300	330	75300	0.85	MDK127R87DS132M4 MDKF127R87DS132M4 MDKA127R87DS132M4 MDKAF127R87DS132M4
5.0	13200	287	79100	1.00	
5.6	11700	253	79900	1.10	
6.7	9830	213	80800	1.3	
7.1	9360	200	80900	1.30	
8.6	7750	166	81500	1.55	
9.8	6840	147	81800	1.80	
4.4	16400	164.50	150000	1.95	MDK167D160L8
5.3	13400	134.99	150000	2.4	MDKH167D160L8
5.8	12300	164.50	150000	2.6	MDK167DS160M6
7.1	10100	134.99	150000	3.2	MDKH167DS160M6
6.4	11200	150.41	114900	1.60	MDK157DS160M6 MDKF157DS160M6 MDKA157DS160M6 MDKAF157DS160M6
7.8	9130	122.39	115500	1.95	
9.6	7480	100.22	115900	2.4	
10	6840	91.65	116000	2.6	
12	5950	79.75	116200	3.0	
7.1	10200	136.14	80600	1.30	MDK127DS160M6 MDKF127DS160M6 MDKA127DS160M6 MDKAF127DS160M6
7.8	9140	122.48	81000	1.40	
8.7	8220	110.18	81400	1.60	
11	6710	89.89	81900	1.95	
9.8	7320	146.07	81700	1.80	MDK127DS132M4 MDKF127DS132M4 MDKA127DS132M4 MDKAF127DS132M4
11	6820	136.14	81800	1.90	
12	6130	122.48	82000	2.1	
13	5520	110.18	82200	2.4	
16	4500	89.89	82400	2.9	
17	4110	81.98	82500	3.2	
20	3550	70.95	82600	3.7	
10	7190	143.47	65000	1.10	MDK107DS132M4 MDKF107DS132M4 MDKA107DS132M4 MDKAF107DS132M4
12	6080	121.46	65000	1.30	
13	5630	112.41	65000	1.40	
14	5050	100.75	65000	1.60	MDK107DS132M4 MDKF107DS132M4 MDKA107DS132M4 MDKAF107DS132M4
16	4560	90.96	64200	1.75	
17	4140	82.61	63200	1.95	
20	3670	73.30	61900	2.2	
22	3330	66.52	60900	2.4	
25	2860	57.17	59100	2.8	
29	2500	49.90	57500	3.1	
34	2120	42.33	55500	3.5	
39	1850	37.00	53800	3.9	

n_a [1/min]	M_a [Nm]	i	F_{Ra} [N]	f_B	typ motoreduktora *gearmotor type*
7.5kW					
15	4850	96.80	38300	0.90	MDK97DS132M4 MDKF97DS132M4 MDKA97DS132M4 MDKAF97DS132M4
17	4330	86.52	38300	1.00	
18	3900	77.89	38100	1.10	
20	3530	70.54	37900	1.20	
23	3130	62.55	37500	1.35	
25	2830	56.55	37100	1.50	MDK97DS132M4 MDKF97DS132M4 MDKA97DS132M4 MDKAF97DS132M4
30	2400	47.93	36400	1.80	
34	2100	41.87	35600	2.1	
37	1920	38.30	35100	2.2	
42	1710	34.23	34400	2.5	
23	3160	63.00	24100	0.85	MDK87DS132M4 MDKF87DS132M4 MDKA87DS132M4 MDKAF87DS132M4
25	2840	56.64	24200	0.95	
29	2460	49.16	24200	1.10	
32	2200	44.02	24200	1.20	
39	1830	36.52	23900	1.35	
46	1570	31.39	23500	1.70	MDK87DS132M4 MDKF87DS132M4 MDKA87DS132M4 MDKAF87DS132M4
51	1400	27.88	23200	1.85	
57	1250	24.92	22800	2.0	
64	1120	22.41	22500	2.1	
74	970	19.45	21900	2.4	
82	870	17.42	21500	2.5	
89	800	16.00	20600	2.3	
99	725	14.45	20700	2.9	
46	1550	30.89	15400	1.00	MDK77DS132M4 MDKF77DS132M4 MDKA77DS132M4 MDKAF77DS132M4
49	1470	29.27	16000	1.05	
56	1280	25.62	17000	1.20	
62	1160	23.08	17700	1.35	
71	1010	20.25	18300	1.50	
80	890	17.87	18600	1.60	MDK77DS132M4 MDKF77DS132M4 MDKA77DS132M4 MDKAF77DS132M4
90	795	15.84	18200	1.75	
106	675	13.52	17800	2.0	
116	620	12.36	17000	1.60	
132	545	10.84	16700	1.80	
150	480	9.56	16300	1.95	
169	425	8.48	15900	2.1	
198	365	7.24	15400	2.3	
9.2kW					
1.7	46700	835	190000	1.05	MDK187R107DS160S4 MDKH187R107DS160S4
2.0	40600	729	190000	1.25	
2.3	34600	622	190000	1.45	
2.8	29400	520	190000	1.70	
3.2	25600	454	190000	1.95	
1.4	58900	1046	190000	0.85	MDK187R97DS160S4 MDKH187R97DS160S4
1.5	53200	945	190000	0.95	
2.0	41600	738	190000	1.20	
2.3	34900	621	190000	1.45	
2.7	29500	527	190000	1.70	
4.5	18000	318	150000	1.80	MDK167R107DS160S4 MDKH167R107DS160S4
5.2	15600	278	150000	2.1	
5.9	13500	244	150000	2.4	

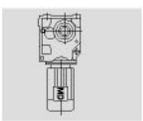

n_a [1/min]	M_a [Nm]	i	F_{Ra} [N]	f_B	typ motoreduktora *gearmotor type*
9.2kW					
6.8	11800	213	150000	2.7	MDK167R107DS160S4
7.0	11500	206	150000	2.8	MDKH167R107DS160S4
2.3	35600	632	150000	0.90	MDK167R97DS160S4 MDKH167R97DS160S4
2.6	31400	561	150000	1.00	
3.0	27100	481	150000	1.20	
3.4	23700	423	150000	1.35	
3.9	20700	369	150000	1.55	
3.7	21300	385	110400	0.85	MDK157R107DS160S4 MDKF157R107DS160S4 MDKA157R107DS160S4 MDKAF157R107DS160S4
4.4	17900	325	112300	1.00	
4.8	16600	299	112800	1.10	
5.7	14100	253	114000	1.3	
6.2	12600	230	114500	1.40	
3.8	21200	379	110400	0.85	MDK157R97DS160S4 MDKF157R97DS160S4 MDKA157R97DS160S4 MDKAF157R97DS160S4
4.3	18700	333	111800	0.95	
4.9	16300	291	11300	1.10	
5.7	14300	253	77400	0.90	MDK127R87DS160S4 MDKF127R87DS160S4 MDKA127R87DS160S4 MDKAF127R87DS160S4
6.8	12000	213	79700	1.10	
7.2	11400	200	80000	1.05	
8.7	9460	166	80900	1.25	
9.8	8350	147	81300	1.45	
11	8310	136.14	81300	1.55	MDK127DS160S4 MDKF127DS160S4 MDKA127DS160S4 MDKAF127DS160S4
12	7470	122.48	81600	1.75	
13	6720	110.18	81900	1.95	
16	5480	89.89	82200	2.4	
18	5000	81.98	82300	2.6	
13	6860	112.41	62400	1.15	MDK107DS160S4 MDKF107DS160S4 MDKA107DS160S4 MDKAF107DS160S4
14	6150	100.75	61800	1.30	
16	5550	90.96	61100	1.45	
17	5040	82.61	60400	1.60	MDK107DS160S4 MDKF107DS160S4 MDKA107DS160S4 MDKAF107DS160S4
20	4470	73.30	59400	1.80	
22	4060	66.52	58600	1.95	
25	3490	57.17	57100	2.3	
29	3040	49.90	55700	2.6	
34	2580	42.33	54000	2.8	
18	4750	77.89	35100	0.90	MDK97DS160S4 MDKF97DS160S4 MDKA97DS160S4 MDKAF97DS160S4
20	4300	70.54	35100	1.00	
23	3820	62.55	35100	1.15	
25	3450	56.55	34900	1.25	
30	2920	47.93	34400	1.45	MDK97DS160S4 MDKF97DS160S4 MDKA97DS160S4 MDKAF97DS160S4
34	2550	41.87	34000	1.70	
38	2340	38.30	33600	1.85	
42	2090	34.23	33100	2.1	
47	1880	30.82	32500	2.3	
52	1700	27.91	32000	2.5	
58	1510	24.75	31300	2.9	
29	3000	49.16	22000	0.90	MDK87DS160S4 MDKF87DS160S4 MDKA87DS160S4 MDKAF87DS160S4
33	2690	44.02	22200	0.95	
39	2230	36.52	22200	1.10	
46	1910	31.39	22100	1.40	

n_a [1/min]	M_a [Nm]	i	F_{Ra} [N]	f_B	typ motoreduktora *gearmotor type*
9.2kW					
52	1700	27.88	21900	1.55	MDK87DS160S4 MDKF87DS160S4 MDKA87DS160S4 MDKAF87DS160S4
58	1520	24.92	21700	1.65	
64	1370	22.41	21400	1.70	
74	1190	19.45	21000	1.95	
83	1060	17.42	20700	2.1	
90	980	16.00	19700	1.85	
100	880	14.45	20000	2.4	
115	765	12.56	19500	2.6	
129	680	11.17	18600	2.2	
144	610	10.00	18200	2.5	
62	1410	23.08	16300	1.10	MDK77DS160S4 MDKF77DS160S4 MDKA77DS160S4 MDKAF77DS160S4
71	1240	20.25	17300	1.20	
81	1090	17.87	17600	1.35	
91	970	15.84	17400	1.45	
107	820	13.52	17000	1.60	MDK77DS160S4 MDKF77DS160S4 MDKA77DS160S4 MDKAF77DS160S4
117	755	12.36	16300	1.35	
133	660	10.84	16000	1.50	
151	585	9.56	15700	1.60	
170	515	8.48	15400	1.70	
199	440	7.24	14900	1.85	
11.0kW					
1.7	56000	835	190000	0.90	MDK187R107DS160M4 MDKH187R107DS160M4
2.0	48700	729	190000	1.05	
2.3	41600	622	190000	1.20	
2.8	35200	520	190000	1.4	
3.2	30700	454	190000	1.65	
4.1	23700	355	190000	2.1	
2.0	49800	738	190000	1.00	MDK187R97DS160M4 MDKH187R97DS160M4
2.3	41800	621	190000	1.20	
2.7	35400	527	190000	1.40	
4.5	21500	318	150000	1.50	MDK167R107DS160M4 MDKH167R107DS160M4
5.2	18800	278	150000	1.70	
5.9	16200	244	150000	1.95	
6.8	14200	213	150000	2.3	
7.0	13800	206	150000	2.3	
2.6	37600	561	150000	0.85	MDK167R97DS160M4 MDKH167R97DS160M4
3.0	32400	481	150000	1.00	
3.4	28400	423	150000	1.15	
3.9	24800	369	150000	1.30	
4.3	22400	333	109700	0.80	MDK157R97DS160M4 MDKF157R97DS160M4 MDKA157R97DS160M4 MDKAF157R97DS160M4
4.9	19500	291	114000	0.90	
6.8	14400	231	77200	0.90	MDK127R87DS160M4 MDKF127R87DS160M4 MDKA127R87DS160M4 MDKAF127R87DS160M4
7.2	13700	200	78600	0.90	
8.7	11300	166	80100	1.05	
9.8	10000	147	80700	1.20	

n_a [1/min]	M_a [Nm]	i	F_{Ra} [N]	f_B	typ motoreduktora *gearmotor type*
11.0kW					
5.3	19700	134.99	150000	1.60	MDK167D180L8
6.6	16000	109.83	150000	2.0	MDKH167D180L8
5.8	18000	164.50	150000	1.80	MDK167DS180M6
7.1	14800	134.99	150000	2.2	MDKH167DS180M6
8.8	12000	164.50	150000	2.7	MDK167DS160M4
11	9850	134.99	150000	3.3	MDKH167DS160M4
5.9	17900	122.39	112300	1.00	MDK157D180L8
7.2	14600	100.22	113700	1.25	MDKF157D180L8
7.9	13400	91.65	114200	1.35	MDKA157D180L8
9.0	11600	79.75	114800	1.55	MDKAF157D180L8
6.4	16500	150.41	112900	1.10	
7.8	13400	122.39	114200	1.35	MDK157DS180M6
9.6	11000	100.22	115000	1.65	MDKF157DS180M6
10	10000	91.65	115300	1.80	MDKA157DS180M6
12	8730	79.75	115600	2.1	MDKAF157DS180M6
9.6	11000	150.41	115000	1.65	MDK157DS160M4
12	8930	122.39	115600	2.0	MDKF157DS160M4
14	7310	100.22	115900	2.5	MDKA157DS160M4
16	6690	91.65	116000	2.7	MDKAF157DS160M4
11	9930	136.14	80700	1.30	
12	8930	122.48	81100	1.45	MDK127DS160M4
13	8040	110.18	81400	1.60	MDKF127DS160M4
16	6560	89.89	81900	2.0	MDKA127DS160M4
18	5980	81.98	82100	2.2	MDKAF127DS160M4
20	5180	70.95	82300	2.5	
13	8200	112.41	58400	1.00	MDK107DS160M4
14	7350	100.75	58300	1.10	MDKF107DS160M4
16	6630	90.96	58000	1.20	MDKA107DS160M4
17	6030	82.61	57500	1.35	MDKAF107DS160M4
20	5350	73.30	56900	1.50	
22	4850	66.52	56200	1.65	MDK107DS160M4
25	4170	57.17	55100	1.90	MDKF107DS160M4
29	3640	49.90	54000	2.2	MDKA107DS160M4
34	3090	42.33	52500	2.4	MDKAF107DS160M4
39	2700	37.00	51200	2.7	
20	5150	70.54	32200	0.85	MDK97DS160M4
23	4560	62.52	32500	0.95	MDKF97DS160M4
25	4130	56.55	32500	1.05	MDKA97DS160M4
30	3500	47.93	32500	1.25	MDKAF97DS160M4
34	3050	41.87	32200	1.40	
38	2790	38.30	32000	1.55	
42	2500	34.23	31600	1.70	MDK97DS160M4
47	2250	30.82	31300	1.90	MDKF97DS160M4
52	2040	27.91	30800	2.1	MDKA97DS160M4
58	1800	24.75	30300	2.4	MDKAF97DS160M4
64	1630	22.37	29800	2.6	
33	3210	44.02	20000	0.80	MDK87DS160M4
39	2660	36.52	20400	0.95	MDKF87DS160M4
46	2290	31.39	20600	1.20	MDKA87DS160M4
					MDKAF87DS160M4

n_a [1/min]	M_a [Nm]	i	F_{Ra} [N]	f_B	typ motoreduktora *gearmotor type*
11.0kW					
52	2030	27.88	20600	1.30	MDK87DS160M4 MDKF87DS160M4 MDKA87DS160M4
58	1820	24.92	20500	1.40	MDKAF87DS160M4
64	1630	22.41	20300	1.40	
74	1420	19.45	20100	1.60	
83	1270	17.42	19800	1.75	
90	1170	16.00	18800	1.55	MDK87DS160M4
100	1050	14.45	19400	2.0	MDKF87DS160M4
115	920	12.56	18900	2.2	MDKA87DS160M4
129	810	11.17	18000	1.85	MDKAF87DS160M4
144	730	10.00	17700	2.1	
174	605	8.29	17100	2.3	
200	525	7.21	16700	2.5	
62	1680	23.08	14400	0.90	
71	1480	20.25	15900	1.00	
81	1300	17.87	16600	1.10	
97	1160	15.84	16500	1.20	MDK77DS160M4
107	990	13.52	16300	1.35	MDKF77DS160M4
117	900	12.36	15500	1.10	MDKA77DS160M4
133	790	10.84	15300	1.25	MDKAF77DS160M4
151	700	9.56	15100	1.35	
170	620	8.48	14800	1.45	
199	530	7.24	14500	1.55	
15.0kW					
2.3	56200	622	190000	0.90	
2.8	47600	520	190000	1.05	
3.2	41400	454	190000	1.20	MDK187R107DS180S4
4.1	32000	355	190000	1.55	MDKH187R107DS180S4
5.6	23800	261	190000	2.1	
4.6	29100	318	150000	1.10	
5.3	25300	278	150000	1.25	
6.0	22000	244	150000	1.45	
6.8	19200	213	150000	1.65	MDK167R107DS180S4
7.1	18700	206	150000	1.7	MDKH167R107DS180S4
8.1	16100	180	150000	2	
9.1	14600	160	150000	2.2	
6.3	20600	230	110800	0.85	
6.9	19400	213	111500	0.95	MDK157R107DS180S4
7.8	16700	187	112800	1.05	MDKF157R107DS180S4
9.3	14200	157	113900	1.25	MDKA157R107DS180S4
12	11100	122	115000	1.65	MDKAF157R107DS180S4
14	9710	107	115400	1.85	
5.4	26600	179.86	190000	1.90	MDK187DS180L6
5.9	24400	165.21	190000	2.1	MDKH187DS180L6
7.2	19900	134.99	150000	1.60	MDK167DS180L6
8.8	16200	109.83	150000	1.95	MDKH167DS180L6
8.9	16100	164.50	150000	2.0	MDK167DS180S4
11	13200	134.99	150000	2.4	MDKH167DS180S4
7.9	18100	122.39	112200	1.00	MDK157DS180L6
9.7	14800	100.22	113700	1.20	MDKF157DS180L6
11	13500	91.65	114100	1.35	MDKA157DS180L6
					MDKAF157DS180L6

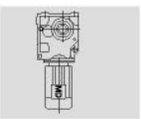

n_a [1/min]	M_a [Nm]	i	F_{Ra} [N]	f_B	typ motoreduktora *gearmotor type*
15.0kW					
12	11800	79.75	114800	1.55	MDK157DS180L6 MDKF157DS180L6 MDKA157DS180L6 MDKAF157DS180L6
14	10400	70.38	115200	1.75	
9.7	14800	150.41	113700	1.20	MDK157DS180S4 MDKF157DS180S4 MDKA157DS180S4 MDKAF157DS180S4
12	12000	122.39	114700	1.50	
15	9830	100.22	114200	1.85	
16	8990	91.65	112500	2.0	
18	7820	79.75	109600	2.3	
11	13400	136.14	79000	0.95	MDK127DS180S4 MDKF127DS180S4 MDKA127DS180S4 MDKAF127DS180S4
12	12000	122.48	79700	1.10	
13	10800	110.18	80300	1.20	
16	8820	89.89	81200	1.45	MDK127DS180S4 MDKF127DS180S4 MDKA127DS180S4 MDKAF127DS180S4
18	8040	81.98	81400	1.60	
21	6960	70.95	81600	1.85	
23	6140	62.60	80000	2.1	
27	5300	54.07	78000	2.5	
31	4690	47.82	76200	2.8	
16	8920	90.96	50900	0.90	MDK107DS180S4 MDKF107DS180S4 MDKA107DS180S4 MDKAF107DS180S4
18	8110	82.61	51100	1.00	
20	7190	73.30	51200	1.10	
22	6530	66.52	51000	1.25	
26	5610	57.17	50600	1.45	MDK107DS180S4 MDKF107DS180S4 MDKA107DS180S4 MDKAF107DS180S4
29	4900	49.90	50000	1.60	
34	4150	42.33	49100	1.75	
39	3630	37.00	48200	2.0	
45	3210	32.69	47300	2.3	
47	3070	31.28	47000	2.2	
50	2840	29.00	46400	2.5	
30	4700	47.93	28100	0.90	MDK97DS180S4 MDKF97DS180S4 MDKA97DS180S4 MDKAF97DS180S4
35	4110	41.87	28400	1.05	
38	3760	38.30	28500	1.15	
43	3360	34.23	28500	1.30	
47	3020	30.82	28400	1.40	
52	2740	27.91	28300	1.55	MDK97DS180S4 MDKF97DS180S4 MDKA97DS180S4 MDKAF97DS180S4
59	2430	24.75	28000	1.75	
65	2190	22.37	27700	1.95	
77	1860	18.96	27200	2.3	
88	1620	16.56	26600	2.7	
47	3080	31.39	17300	0.90	MDK87DS180S4 MDKF87DS180S4 MDKA87DS180S4 MDKAF87DS180S4
52	2730	27.88	17600	0.95	
59	2440	24.92	17800	1.00	
65	2200	22.41	18000	1.05	
75	1910	19.45	18000	1.20	
84	1710	17.42	18000	1.3	
91	1570	16.00	16800	1.15	MDK87DS180S4 MDKF87DS180S4 MDKA87DS180S4 MDKAF87DS180S4
101	1420	14.45	17800	1.50	
116	1230	12.56	17600	1.60	

n_a [1/min]	M_a [Nm]	i	F_{Ra} [N]	f_B	typ motoreduktora *gearmotor type*
15.0kW					
131	1100	11.17	16600	1.35	MDK87DS180S4 MDKF87DS180S4 MDKA87DS180S4 MDKAF87DS180S4
146	980	10.00	16400	1.55	
176	810	8.29	16000	1.70	
202	705	7.21	15700	1.85	
18.5kW					
2.8	58600	520	190000	0.85	MDK187R107DS180M4 MDKH187R107DS180M4
3.2	51100	454	190000	1.00	
4.1	39500	355	190000	1.25	
5.6	29400	261	190000	1.70	
6.6	24800	221	190000	2.0	
4.6	35800	318	150000	0.90	MDK167R107DS180M4 MDKH167R107DS180M4
5.3	31200	278	150000	1.00	
6.0	27100	244	150000	1.20	
6.9	23600	213	150000	1.35	
7.1	23000	206	150000	1.40	
8.1	19900	180	150000	1.60	
9.2	18000	160	150000	1.80	
11	15200	135	150000	2.1	
12	13200	118	150000	2.4	
7.8	20700	187	110700	0.85	MDK157R107DS180M4 MDKF157R107DS180M4 MDKA157R107DS180M4 MDKAF157R107DS180M4
9.3	17500	157	112400	1.05	
12	13700	122	113900	1.35	
14	12000	107	112000	1.50	
5.4	32800	179.86	190000	1.55	MDK187DS200LS6 MDKH187DS200LS6
5.9	30100	165.21	190000	1.65	
6.7	26300	144.59	190000	1.90	
7.5	23600	129.69	190000	2.1	
8.1	21700	179.86	190000	2.3	MDK187DS180M4 MDKH187DS180M4
8.9	19900	165.21	190000	2.5	
10	17400	144.59	190000	2.9	
11	15600	129.69	190000	3.2	
11	16300	134.99	150000	1.95	MDK167DS180M4 MDKH167DS180M4
13	13200	109.83	150000	2.4	
17	10600	87.86	150000	3.0	
9.7	18300	100.22	112100	1.00	MDK157DS200LS6 MDKF157DS200LS6 MDKA157DS200LS6 MDKAF157DS200LS6
11	16700	91.65	112800	1.10	
12	14500	79.75	111500	1.25	
14	12800	70.38	109900	1.40	
12	14800	122.39	111600	1.20	MDK157DS180M4 MDKF157DS180M4 MDKA157DS180M4 MDKAF157DS180M4
15	12100	100.22	109100	1.50	
16	11100	91.65	107800	1.65	
18	9620	79.75	105600	1.85	
21	8490	70.38	103400	2.1	
24	7360	61.02	100700	2.5	
27	6550	54.29	98500	2.8	
31	5640	46.79	95500	3.2	
39	4580	38.02	91300	3.9	
13	13300	110.18	79000	1.00	MDK127DS180M4 MDKF127DS180M4 MDKA127DS180M4 MDKAF127DS180M4
16	10800	89.89	79000	1.20	
18	9890	81.98	78500	1.30	

n_a [1/min]	M_a [Nm]	i	F_{Ra} [N]	f_B	typ motoreduktora *gearmotor type*
18.5kW					
21	8560	70.95	77500	1.50	MDK127DS180M4 MDKF127DS180M4 MDKA127DS180M4 MDKAF127DS180M4
23	7550	62.60	76400	1.70	
27	6520	54.07	74800	2.0	
31	5770	47.82	73400	2.2	
36	4850	40.19	71300	2.7	
40	4370	36.25	69900	3.0	
47	3780	31.37	68000	3.4	
53	3340	27.68	66200	3.9	
20	8840	73.30	46300	0.90	MDK107DS180M4 MDKF107DS180M4 MDKA107DS180M4 MDKAF107DS180M4
22	8020	66.52	46600	1.00	
26	6890	57.17	46800	1.15	
29	6020	49.90	46700	1.30	
35	5100	42.33	46300	1.45	MDK107DS180M4 MDKF107DS180M4 MDKA107DS180M4 MDKAF107DS180M4
40	4460	37.00	45700	1.60	
45	3940	32.69	45100	1.85	
47	3770	31.28	44900	1.80	
51	3500	29.00	44400	2.1	
56	3170	26.32	43800	2.3	
65	2730	22.62	42700	2.6	
74	2380	19.74	41700	3.0	
88	2020	16.75	40400	3.5	
35	5050	41.87	25100	0.85	MDK97DS180M4 MDKF97DS180M4 MDKA97DS180M4 MDKAF97DS180M4
48	3720	30.82	26000	1.15	
53	3360	27.91	26000	1.30	
59	2980	24.75	26000	1.45	
65	2700	22.37	25900	1.60	MDK97DS180M4 MDKF97DS180M4 MDKA97DS180M4 MDKAF97DS180M4
77	2290	18.96	25700	1.90	
88	2000	16.56	25300	2.2	
106	1670	13.85	24800	2.6	
122	1450	11.99	24300	2.7	
59	3000	24.92	15600	0.85	MDK87DS180M4 MDKF87DS180M4 MDKA87DS180M4 MDKAF87DS180M4
65	2700	22.41	15900	0.85	
75	2340	19.45	16200	1.00	
84	2100	17.42	16400	1.05	
101	1740	14.45	16500	1.20	
117	1510	12.56	16400	1.30	
131	1350	11.17	15400	1.10	
147	1210	10.00	15300	1.25	
177	1000	8.29	15100	1.40	
203	870	7.21	14900	1.50	
22kW					
3.2	60800	454	190000	0.8	MDK187R107DS180L4 MDKH187R107DS180L4
4.1	47100	355	190000	1.05	
5.6	35000	261	190000	1.45	
6.6	29600	221	190000	1.70	
7.6	25800	193	190000	1.95	
8.9	21800	163	190000	2.3	

n_a [1/min]	M_a [Nm]	i	F_{Ra} [N]	f_B	typ motoreduktora *gearmotor type*
22kW					
5.3	37200	278	150000	0.85	MDK167R107DS180L4 MDKH167R107DS180L4
6.0	32300	244	150000	1.00	
6.9	28200	213	150000	1.15	
7.1	27500	206	150000	1.15	
8.1	23800	180	150000	1.35	
9.2	21400	160	150000	1.50	
11	18100	135	150000	1.80	
12	15800	118	150000	2.0	
9.3	20900	157	109400	0.85	MDK157R107DS180L4 MDKF157R107DS180L4 MDKA157R107DS180L4 MDKAF157R107DS180L4
12	16400	122	108100	1.10	
14	14300	107	107000	1.25	
5.4	39000	179.86	190000	1.30	MDK187DS200L6 MDKH187DS200L6
5.9	35800	165.21	190000	1.40	
6.7	31300	144.59	190000	1.60	
7.5	28100	129.69	190000	1.80	
8.6	24400	112.60	190000	2.1	
8.1	25800	179.86	190000	1.95	MDK187DS180L4 MDKH187DS180L4
8.9	23700	165.21	190000	2.1	
10	20700	144.59	190000	2.4	
11	18600	129.69	190000	2.7	
11	19400	134.99	150000	1.65	MDK167DS180L4 MDKH167DS180L4
13	15700	109.83	150000	2.0	
17	12600	87.86	150000	2.5	
19	11200	78.14	150000	2.9	
9.7	21700	100.22	105900	0.85	MDK157DS200L6 MDKF157DS200L6 MDKA157DS200L6 MDKAF157DS200L6
11	19900	91.65	105900	0.90	
12	17300	79.75	105500	1.05	
14	15200	70.38	104600	1.20	
16	13200	61.02	103300	1.35	
12	17600	122.39	105500	1.05	MDK157DS180L4 MDKF157DS180L4 MDKA157DS180L4 MDKAF157DS180L4
15	14400	100.22	104100	1.25	
16	13100	91.65	103200	1.35	
18	11400	79.75	101600	1.55	
21	10100	70.38	99800	1.80	
24	8750	61.02	97700	2.1	
27	7790	54.29	95800	2.3	
31	6710	46.79	93200	2.7	
39	5450	38.02	89400	3.3	
16	12900	89.89	73900	1.00	MDK127DS180L4 MDKF127DS180L4 MDKA127DS180L4 MDKAF127DS180L4
18	11800	81.98	73800	1.10	
21	10200	70.95	73400	1.30	
23	8980	62.60	72800	1.45	
27	7750	54.07	71700	1.70	MDK127DS180L4 MDKF127DS180L4 MDKA127DS180L4 MDKAF127DS180L4
31	6860	47.82	70700	1.90	
36	5760	40.19	69000	2.3	
40	5200	36.25	67800	2.5	
47	4500	31.37	66200	2.9	

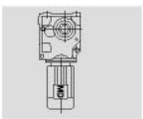

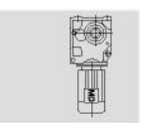

n_a [1/min]	M_a [Nm]	i	F_{Ra} [N]	f_B	typ motoreduktora *gearmotor type*
22kW					
53	3970	27.68	64600	3.3	MDK127DS180L4 MDKF127DS180L4 MDKA127DS180L4 MDKAF127DS180L4
61	3430	23.91	62800	3.8	
69	3030	21.15	61200	4.3	
26	8200	57.17	43000	1.00	MDK107DS180L4 MDKF107DS180L4 MDKA107DS180L4 MDKAF107DS180L4
29	7160	49.90	43300	1.10	
35	6070	42.33	43400	1.20	
40	5310	37.00	43200	1.35	MDK107DS180L4 MDKF107DS180L4 MDKA107DS180L4 MDKAF107DS180L4
45	4690	32.69	42900	1.55	
47	4490	31.28	42800	1.50	
51	4160	29.00	42500	1.75	
56	3770	26.32	42000	1.90	
65	3240	22.62	41200	2.2	
74	2830	19.74	40400	2.5	
88	2400	16.75	39300	2.9	
100	2100	14.64	38400	3.3	
109	1930	13.43	36800	2.2	
125	1680	11.73	35900	2.6	
147	1430	9.94	34800	2.9	
48	4420	30.82	23500	0.95	MDK97DS180L4 MDKF97DS180L4 MDKA97DS180L4 MDKAF97DS180L4
53	4000	27.91	23800	1.05	
59	3550	24.75	24100	1.20	
65	3210	22.37	24200	1.35	
77	2720	18.96	24100	1.60	MDK97DS180L4 MDKF97DS180L4 MDKA97DS180L4 MDKAF97DS180L4
88	2370	16.56	24000	1.80	
106	1990	13.85	23700	2.2	
122	1720	11.99	23300	2.3	
141	1490	10.41	21800	1.90	
168	1250	8.71	21300	2.1	
75	2790	19.45	14400	0.80	MDK87DS180L4 MDKF87DS180L4 MDKA87DS180L4 MDKAF87DS180L4
84	2500	17.42	14800	0.90	
101	2070	14.45	15100	1.00	
117	1800	12.56	15300	1.10	
131	1600	11.17	14200	0.95	
147	1430	10.00	14200	1.05	
177	1190	8.29	14300	1.20	
203	1030	7.21	14200	1.25	
30kW					
5.6	47700	261	190000	1.05	MDK187R107DS200L4 MDKH187R107DS200L4
6.6	40400	221	190000	1.25	
7.6	35200	193	190000	1.4	
9.0	29700	163	190000	1.70	
6.9	38400	213	150000	0.85	MDK167R107DS200L4 MDKH167R107DS200L4
7.1	37500	206	150000	0.85	
8.7	32400	180	150000	1.00	
9.2	29100	160	150000	1.10	
11	24700	135	150000	1.30	
12	21500	118	150000	1.50	

n_a [1/min]	M_a [Nm]	i	F_{Ra} [N]	f_B	typ motoreduktora *gearmotor type*
30kW					
8.2	35100	179.86	190000	1.45	MDK187DS200L4 MDKH187DS200L4
8.9	32200	165.21	190000	1.55	
10	28200	144.59	190000	1.75	
11	25300	129.69	190000	2.0	
13	21900	112.60	190000	2.3	
14	19900	102.16	190000	2.5	
17	17200	88.00	190000	2.9	
13	21400	109.83	150000	1.50	MDK167DS200L4 MDKH167DS200L4
17	17100	87.86	150000	1.85	
19	15200	78.14	150000	2.1	
22	13300	68.07	150000	2.4	
24	11800	60.74	150000	2.7	
15	19500	100.22	92700	0.90	MDK157DS200L4 MDKF157DS200L4 MDKA157DS200L4 MDKAF157DS200L4
16	17900	91.65	92800	1.00	
18	15500	79.75	92400	1.15	
21	13700	70.38	91800	1.30	
24	11900	61.02	90700	1.50	
27	10600	54.29	89500	1.70	
31	9120	46.79	87800	1.95	
39	7410	38.02	85100	2.4	
47	6100	31.30	82200	3.0	
21	13800	70.95	64200	0.95	MDK127DS200L4 MDKF127DS200L4 MDKA127DS200L4 MDKAF127DS200L4
23	12200	62.60	64600	1.05	
27	10500	54.07	64700	1.25	
31	9320	47.82	64400	1.40	
37	7830	40.19	63700	1.65	
41	7060	36.25	63100	1.85	
47	6110	31.37	62000	2.1	
53	5390	27.68	61000	2.4	
62	4660	23.91	59600	2.8	
35	8250	42.33	36100	0.90	MDK107DS200L4 MDKF107DS200L4 MDKA107DS200L4 MDKAF107DS200L4
40	7210	37.00	37600	1.00	
47	6100	31.28	38000	1.10	
51	5650	29.00	38000	1.25	MDK107DS200L4 MDKF107DS200L4 MDKA107DS200L4 MDKAF107DS200L4
56	5130	26.32	38000	1.40	
65	4410	22.62	37700	1.65	
74	3850	19.74	37400	1.85	
88	3260	16.75	36700	2.2	
100	2850	14.64	36100	2.4	
109	2620	13.43	34400	1.65	
125	2280	11.73	33800	1.90	
148	1940	9.94	33000	2.2	
169	1690	8.69	32200	2.4	
59	4820	24.75	19600	0.9	MDK97DS200L4 MDKF97DS200L4 MDKA97DS200L4 MDKAF97DS200L4
66	4360	22.37	20100	1.00	
78	3690	18.96	20700	1.15	
89	3230	16.56	21000	1.35	
106	2700	13.85	21200	1.60	

n_a [1/min]	M_a [Nm]	i	F_{Ra} [N]	f_B	typ motoreduktora *gearmotor type*
30kW					
123	2340	11.99	21100	1.65	MDK97DS200L4 MDKF97DS200L4
141	2030	10.41	19500	1.40	MDKA97DS200L4
169	1700	8.71	10400	1.55	MDKAF97DS200L4
37kW					
5.6	58000	261	176000	0.85	
6.6	49200	221	190000	1.00	MDK187R107DS225S4
7.6	43000	193	190000	1.15	MDKH187R107DS225S4
9.0	36300	163	190000	1.40	
8.1	40000	180	150000	0.80	
9.2	35500	160	150000	0.90	MDK167R107DS225S4
11	30100	135	150000	1.05	MDKH167R107DS225S4
12	26300	118	150000	1.20	
8.2	43200	179.86	190000	1.15	
8.9	39700	165.21	190000	1.25	
10	34800	144.59	190000	1.45	MDK187DS225S4
11	31200	129.69	190000	1.60	MDKH187DS225S4
13	27100	112.60	190000	1.85	
14	24600	102.16	190000	2.0	
17	21200	88.00	190000	2.4	
13	26400	109.83	150000	1.20	
17	21100	87.86	150000	1.50	
19	18800	78.14	150000	1.70	MDK167DS225S4
22	16400	68.07	150000	1.95	MDKH167DS225S4
24	14600	60.74	150000	2.2	
28	12400	51.77	150000	2.6	
16	22000	91.65	83600	0.80	MDK157DS225S4 MDKF157DS225S4
18	19200	79.75	84500	0.95	MDKA157DS225S4 MDKAF157DS225S4
21	16900	70.38	84800	1.05	
24	14700	61.02	84600	1.25	MDK157DS225S4
27	13000	54.29	84100	1.40	MDKF157DS225S4
31	11200	46.79	83200	1.60	MDKA157DS225S4
39	9140	38.02	81300	1.95	MDKAF157DS225S4
47	7520	31.30	79100	2.4	
23	15000	62.60	57500	0.85	MDK127DS225S4
27	13000	54.07	58500	1.00	MDKF127DS225S4
31	11500	47.82	59000	1.15	MDKA127DS225S4
37	9660	40.19	59100	1.35	MDKAF127DS225S4
41	8710	36.25	59000	1.50	
47	7540	31.37	58500	1.70	
53	6650	27.68	57800	1.95	
62	5740	23.91	56900	2.3	MDK127DS225S4
70	5080	21.15	56000	2.6	MDKF127DS225S4
83	4270	17.77	54500	3.0	MDKA127DS225S4
102	3450	14.35	52500	3.5	MDKAF127DS225S4
115	3070	12.79	50200	2.8	
137	2580	10.74	48600	3.1	
169	2090	8.68	46600	3.5	
40	8890	37.00	29000	0.80	MDK107DS225S4
47	7520	31.28	33000	0.90	MDKF107DS225S4
51	6970	29.00	34200	1.05	MDKA107DS225S4
56	6320	26.32	34500	1.15	MDKAF107DS225S4

n_a [1/min]	M_a [Nm]	i	F_{Ra} [N]	f_B	typ motoreduktora *gearmotor type*
37kW					
65	5440	22.62	34700	1.30	
74	4740	19.74	34500	1.50	
88	4020	16.75	34200	1.75	MDK107DS225S4
100	3520	14.64	34200	1.95	MDKF107DS225S4
109	3230	13.43	32300	1.35	MDKA107DS225S4
125	2820	11.73	32000	1.55	MDKAF107DS225S4
148	2390	9.94	31400	1.75	
169	2090	8.69	30900	1.95	
45kW					
6.6	59800	221	172600	0.85	
7.6	52300	193	186100	1.95	MDK187R107DS225M4
9.0	44200	163	190000	1.15	MDKH187R107DS225M4
11	36600	135	150000	0.85	MDK167R107DS225M4
12	32000	118	150000	1.00	MDKH167R107DS225M4
8.2	52600	179.86	185500	0.95	
8.9	48300	165.21	190000	1.05	
10	42300	144.59	190000	1.20	
11	37900	129.69	190000	1.30	MDK187DS225M4
13	32900	112.60	190000	1.50	MDKH187DS225M4
14	29900	102.16	190000	1.65	
17	25700	88.00	190000	1.95	
20	21600	73.96	187700	2.3	
13	32100	109.83	150000	1.00	
17	25700	87.86	150000	1.25	
19	22800	78.14	150000	1.40	MDK167DS225M4
22	19900	68.07	150000	1.60	MDKH167DS225M4
24	17800	60.74	149000	1.80	
28	15100	51.77	145300	2.1	
34	12500	42.89	140600	2.5	
21	20600	70.38	76800	0.85	
24	17800	61.02	77700	1.00	
27	15900	54.29	77900	1.15	
31	13700	46.79	77800	1.30	MDK157DS225M4
39	11100	38.02	76900	1.60	MDKF157DS225M4
47	9150	31.30	75500	1.95	MDKA157DS225M4
53	8080	27.62	74300	2.2	MDKAF157DS225M4
61	7000	23.95	72800	2.6	
69	6230	21.31	71500	2.9	
80	5370	18.37	69700	3.3	
31	14000	47.82	52800	0.95	MDK127DS225M4
37	11700	40.19	53900	1.10	MDKF127DS225M4 MDKA127DS225M4
41	10600	36.25	54200	1.25	MDKAF127DS225M4
47	9170	31.37	54400	1.40	
53	8090	27.68	54200	1.60	
62	6990	23.91	53800	1.85	
70	6180	21.15	53200	2.1	MDK127DS225M4
83	5190	17.77	52200	2.5	MDKF127DS225M4 MDKA127DS225M4
102	4190	14.35	50700	2.9	MDKAF127DS225M4
115	3740	12.79	48300	2.3	
137	3140	10.74	47000	2.5	
169	2540	8.68	45300	2.8	

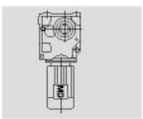

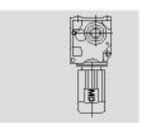

n_a [1/min]	M_a [Nm]	i	F_{Ra} [N]	f_B	typ motoreduktora *gearmotor type*
45kW					
51	8480	29.00	25600	0.85	MDK107DS225M4
56	7690	26.32	28300	0.95	MDKF107DS225M4
65	6610	22.63	31000	1.10	MDKA107DS225M4
74	5770	19.74	31700	1.25	MDKAF107DS225M4
88	4890	16.75	31900	1.45	
100	4280	14.64	31900	1.60	MDK107DS225M4
109	3930	13.43	29900	1.10	MDKF107DS225M4
125	3430	11.73	29900	1.25	MDKA107DS225M4
148	2910	9.94	29600	1.45	MDKAF107DS225M4
169	2540	8.69	29300	1.60	
55kW					
10	51500	144.59	187400	0.95	
11	46200	129.69	190000	1.10	
13	40100	112.60	188500	1.25	
14	36400	102.16	187100	1.35	MDK187D250M4 MDKH187D250M4
17	31300	88.00	184200	1.60	
20	26300	73.96	180200	1.90	
23	22800	64.04	176300	2.2	
17	31300	87.86	145300	1.00	
19	27800	78.14	144600	1.15	
22	24200	68.07	143300	1.30	
24	21600	60.74	141700	1.50	MDK167D250M4 MDKH167D250M4
28	18400	51.77	139100	1.75	
34	15300	42.89	135400	2.1	
40	13000	36.61	131900	2.5	
24	21700	61.02	69000	0.85	
27	19300	54.29	70200	0.95	
32	16700	46.79	71200	1.10	
39	13500	38.02	71500	1.35	
47	11100	31.30	71000	1.60	MDK157D250M4 MDKF157D250M4
53	9840	27.62	70400	1.85	MDKA157D250M4
62	8530	23.95	69400	2.1	MDKAF157D250M4
69	7590	21.31	68400	2.4	
80	6540	18.37	67000	2.8	
99	5310	14.92	64800	3.4	
117	4510	12.65	62900	3.8	
37	14300	40.19	47400	0.90	MDK127D250M4
47	11200	31.37	49300	1.15	MDKF127D250M4
53	9850	27.68	49700	1.30	MDKA127D250M4 MDKAF127D250M4
62	8510	23.91	49900	1.55	
70	7530	21.15	49800	1.75	
83	6330	17.77	49300	2.0	MDK127D250M4 MDKF127D250M4
103	5110	14.35	48300	2.4	MDKA127D250M4
115	4550	12.79	45900	1.85	MDKAF127D250M4
137	3830	10.74	45000	2.1	
170	3090	8.68	43600	2.3	
75kW					
11	62800	129.69	164100	0.80	
13	54500	112.60	166100	0.92	MDK187D280S4
14	49400	102.16	166600	1.00	MDKH187D280S4
17	42600	88.00	166600	1.15	

n_a [1/min]	M_a [Nm]	i	F_{Ra} [N]	f_B	typ motoreduktora *gearmotor type*
75kW					
20	35800	73.96	165300	1.40	
23	31000	64.04	163400	1.60	MDK187D280S4
28	25800	53.36	160100	1.95	MDKH187D280S4
33	22000	45.50	156700	2.3	
19	37800	78.14	126100	0.85	
22	32900	68.07	127100	0.95	
24	29400	60.74	127300	1.10	
29	25100	51.77	126800	1.30	
35	20800	42.89	125200	1.55	MDK167D280S4 MDKH167D280S4
40	17700	36.61	123200	1.80	
46	15600	32.25	121300	2.0	
51	13900	28.77	119300	2.3	
60	11900	24.52	116300	2.7	
39	18400	38.02	60800	1.00	
47	15100	31.30	62200	1.20	
54	13400	27.62	62600	1.35	MDK157D280S4
62	11600	23.95	62600	1.55	MDKF157D280S4
69	10300	21.31	62400	1.75	MDKA157D280S4 MDKAF157D280S4
81	8890	18.37	61800	2.0	
99	7220	14.92	60500	2.5	
117	6120	12.65	59300	2.8	
47	15200	31.37	39200	0.85	
53	13400	27.68	40800	0.95	
62	11600	23.91	42200	1.10	
70	10200	21.15	42900	1.25	MDK127D280S4 MDKF127D280S4
83	8600	17.77	43500	1.50	MDKA127D280S4
103	6940	14.35	43700	1.75	MDKAF127D280S4
116	6190	12.79	41100	1.40	
138	5200	10.74	41000	1.55	
171	4200	8.68	40400	1.70	
90kW					
14	59300	102.16	151300	0.85	
17	51100	88.00	153400	1.00	
20	42900	73.96	154200	1.15	
23	37200	64.04	153800	1.35	MDK187D280M4
28	31000	53.36	152200	1.60	MDKH187D280M4
33	26400	45.50	149900	1.90	
35	24700	42.51	148700	2.0	
38	22400	38.57	146900	2.2	
22	39500	68.07	115100	0.80	
24	35300	60.74	116600	0.90	
29	30100	51.77	117600	1.05	
35	24900	42.89	117600	1.30	
40	21300	36.61	116700	1.50	MDK167D280M4
46	18700	32.25	115500	1.70	MDKH167D280M4
51	16700	28.77	114200	1.90	
60	14200	24.52	111900	2.2	
73	11800	20.32	108800	2.7	
85	10100	17.34	106000	3.2	

n_a [1/min]	M_a [Nm]	i	F_{Ra} [N]	f_B	typ motoreduktora *gearmotor type*
90kW					
39	22100	38.02	52700	0.80	MDK157D280M4 MDKF157D280M4 MDKA157D280M4 MDKAF157D280M4
47	18200	31.30	55500	1.00	
54	16000	27.62	56700	1.10	
62	13900	23.95	57500	1.30	
69	12400	21.31	57900	1.45	
81	10700	18.37	57900	1.70	
99	8670	14.92	57400	2.1	
117	7350	12.65	56600	2.3	
62	13900	23.91	36400	0.95	MDK127D280M4 MDKF127D280M4 MDKA127D280M4 MDKAF127D280M4
70	12300	21.15	37800	1.05	
83	10300	17.77	39200	1.25	
103	8330	14.35	40200	1.45	
116	7420	12.79	37600	1.15	
138	6240	10.74	38000	1.30	
171	5040	8.68	38000	1.45	
110kW					
17	62300	88.00	136000	0.80	MDK187D315S4 MDKH187D315S4
20	52300	73.96	139500	0.95	
23	45300	64.04	141000	1.10	
28	37700	53.36	141500	1.30	
33	32200	45.50	140800	1.55	
35	30100	42.51	140200	1.65	
39	27300	38.57	139100	1.85	
45	23500	33.23	137000	2.1	
53	19800	27.92	134000	2.5	
29	36600	51.77	105500	0.85	MDK167D315S4 MDKH167D315S4
35	30300	42.89	107500	1.05	
41	25900	36.61	108100	1.25	
46	22800	32.25	107900	1.40	
52	20400	28.77	107400	1.55	
61	17300	24.52	106100	1.85	
73	14400	20.32	104000	2.2	
86	12300	17.34	101800	2.6	
62	16900	23.95	50800	1.05	MDK157D315S4 MDKF157D315S4 MDKA157D315S4 MDKAF157D315S4
70	15100	21.31	51900	1.20	
81	13000	18.37	52700	1.40	
100	10600	14.92	53100	1.70	
117	8950	12.65	53000	1.90	
132kW					
20	62800	73.96	123300	0.80	MDK187D315M4 MDKH187D315M4
23	54400	64.04	127000	0.90	
28	45300	53.36	129800	1.10	
33	38600	45.50	130800	1.30	
35	36100	42.51	130900	1.40	
39	32700	38.57	130700	1.55	
45	28200	33.23	129800	1.75	
53	23700	27.92	127900	2.1	
61	20500	24.18	125900	2.3	
74	17100	20.15	122800	2.6	
86	14600	17.18	119700	2.8	

n_a [1/min]	M_a [Nm]	i	F_{Ra} [N]	f_B	typ motoreduktora *gearmotor type*
132kW					
35	36400	42.89	96400	0.90	MDK167D315M4 MDKH167D315M4
41	31100	36.61	98600	1.05	
46	27400	32.25	99600	1.15	
52	24400	28.77	99900	1.30	
61	20800	24.52	99800	1.55	
73	17200	20.32	98700	1.85	
86	14700	17.34	97300	2.2	
62	20300	23.95	43400	0.90	MDK157D315M4 MDKF157D315M4 MDKA157D315M4 MDKAF157D315M4
70	18100	21.31	45300	1.00	
81	15600	18.37	47000	1.15	
100	12700	14.92	48500	1.40	
117	10700	12.65	49100	1.60	
160kW					
28	54900	53.36	114900	0.90	MDK187D315M4a MDKH187D315M4a
33	46800	45.50	118100	1.05	
45	34200	33.23	120500	1.45	
53	28700	27.92	120100	1.75	
61	24900	24.18	119100	1.90	
74	20700	20.15	117200	2.1	
86	17700	17.18	114900	2.3	
41	37700	36.61	86500	0.85	MDK167D315M4a MDKH167D315M4a
61	25200	24.52	91700	1.25	
73	20900	20.32	92000	1.55	
86	17800	17.34	91600	1.80	
81	18900	18.37	39800	0.95	MDK157D315M4a MDKF157D315M4a MDKA157D315M4a MDKAF157D315M4a
100	15400	14.92	42600	1.15	
117	13000	12.65	44100	1.30	
200kW					
33	58500	45.50	100000	0.85	MDK187D315M4b MDKH187D315M4b
45	42700	33.23	107300	1.15	
53	35900	27.92	109000	1.40	
61	31100	24.18	109500	1.55	
74	25900	20.15	109100	1.70	
86	22100	17.18	108100	1.85	
61	31500	24.52	80100	1.00	MDK167D315M4b MDKH167D315M4b
73	26100	20.32	82400	1.20	
86	22300	17.34	83400	1.45	
100	19200	14.92	34200	0.95	MDK157D315M4b MDKF157D315M4b MDKA157D315M4b MDKAF157D315M4b
117	16300	12.65	36900	1.05	

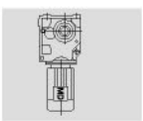

7.5. Wymiary
7.5. Dimensions

MDK37..~MDK157..

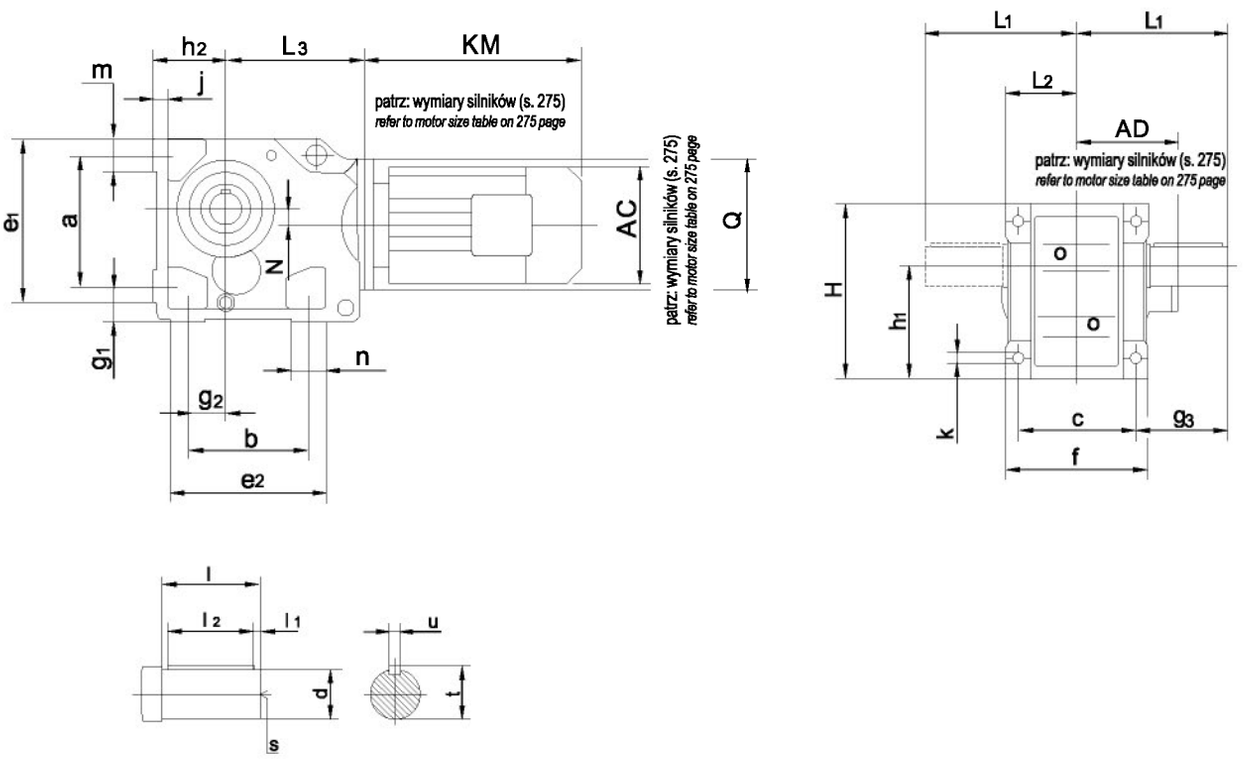

MDKA47B..~MDKA157B..

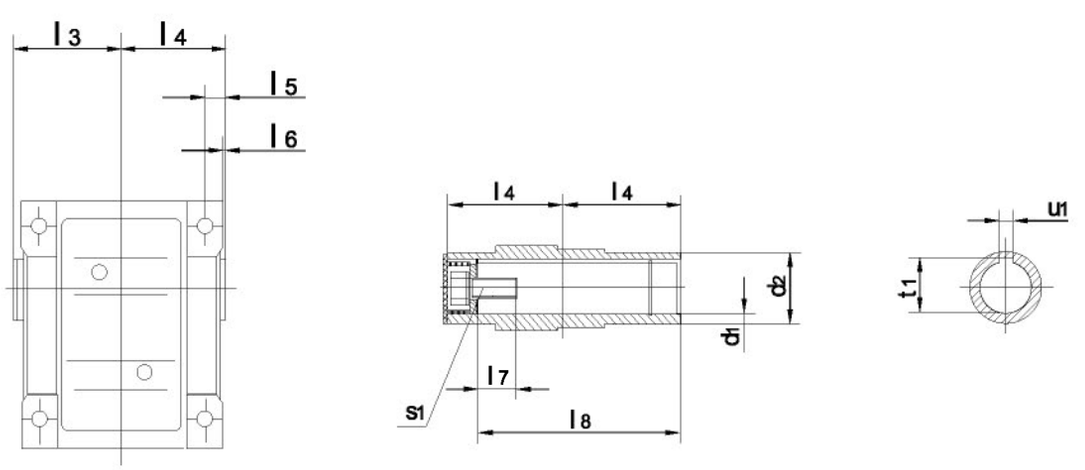

Wielkość *size*	a b c	e_1 e_2 f	g_1 g_2 g_3	h_1 h_2	j	k	m n	Wymiary wału *(shaft dimension)*				
								d	l	l_1 l_2	s	t u
MDK37..	115 110 100	150 143 120	32 28 60	$100_{-0.5}$ $63_{-0.5}$	16	11	37 38	25k6	50	5 40	M10	28 8
MDK47.. MDKA47B..	130 130 120	170 162 145	37 35 75	$112_{-0.5}$ $71_{-0.5}$	18	11	37 32	30k6	60	3.5 50	M10	33 8
MDK57.. MDKA57B..	150 130 130	190 172 157	45 30 88	$132_{-0.5}$ $80_{-0.5}$	21	13.5	43 40	35k6	70	7 56	M12	38 10
MDK67.. MDKA67B..	160 120 140	203 170 170	45 30 101	$140_{-0.5}$ $90_{-0.5}$	24	13.5	43 45	40k6	80	5 70	M16	43 12
MDK77.. MDKA77B..	200 150 165	263 208 200	55 40 123.5	$180_{-0.5}$ $112_{-0.5}$	27	17.5	55 55	50k6	100	10 80	M16	53.5 14
MDK87.. MDKA87B..	233 180 180	305 260 230	70 55 150	$212_{-0.5}$ $132_{-0.5}$	32	22	67 75	60m6	120	5 110	M20	64 18
MDK97.. MDKA97B..	295 240 240	372 294 290	75 75 171	265_{-1} $160_{-0.5}$	36	26	82 60	70m6	140	7.5 125	M20	74.5 20
MDK107.. MDKA107B..	360 280 270	448 380 340	95 95 212	315_{-1} $200_{-0.5}$	40	33	98 100	90m6	170	5 160	M24	95 25
MDK127.. MDKA127B..	420 350 330	526 440 400	110 115 253	375_{-1} $225_{-0.5}$	45	39	111 100	110m6	210	15 180	M24	116 28
MDK157.. MDKA157B..	500 380 420	634 480 500	130 140 247	450_{-1} 280_{-1}	50	39	130 100	120m6	210	5 200	M24	127 32

Wielkość *size*	Wymiary wału drążonego *(hollow shaft dimension)*							H	L_1 L_2	L_3	N	Q
	d_1	d_2	l_3 l_4	l_5 l_6	l_7 l_8	s_1	t_1 u_1					
MDK37..	--	--	--	--	--	--	--	165	110 60	139	8.5	120
MDK47.. MDKA47B..	35H7	50	78 75	15 3	22 132	M12 X 30	38.3 10	185	135 72	166	7.2	160
MDK57.. MDKA57B..	40H7	55	86 83	18 3	29 142	M16 X 40	43.3 12	217	153 80	173	13.1	160
MDK67.. MDKA67B..	40H7	55	93 90	20 3.5	29 156	M16 X 40	43.3 12	228	171 86.5	179	20	160
MDK77.. MDKA77B..	50H7	70	108 105	22.5 4	32 183	M16 X 45	53.8 14	288	206 101	202	31.3	200
MDK87.. MDKA87B..	60H7	85	123 120	30 4	36 210	M20 X 50	64.4 18	340	240 116	257	25.9	250
MDK97.. MDKA97B..	70H7	95	153 150	30 4	34 270	M20 X 50	74.9 20	417	291 146	277	32.3	300
MDK107.. MDKA107B..	90H7	118	178 175	40 2.5	40 313	M24 X 60	95.4 25	503	347 175	341	52	350
MDK127.. MDKA127B..	100H7	135	208 205	40 2.5	38 373	M24 X 60	106.4 28	592	418 203	390	53	450
MDK157.. MDKA157B..	120H7	155	253 250	40	36 460	M24 X 60	127.4 32	705	457 250	426	71.7	550

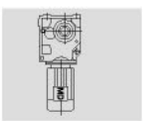

MDKH47B..~MDKH157B..

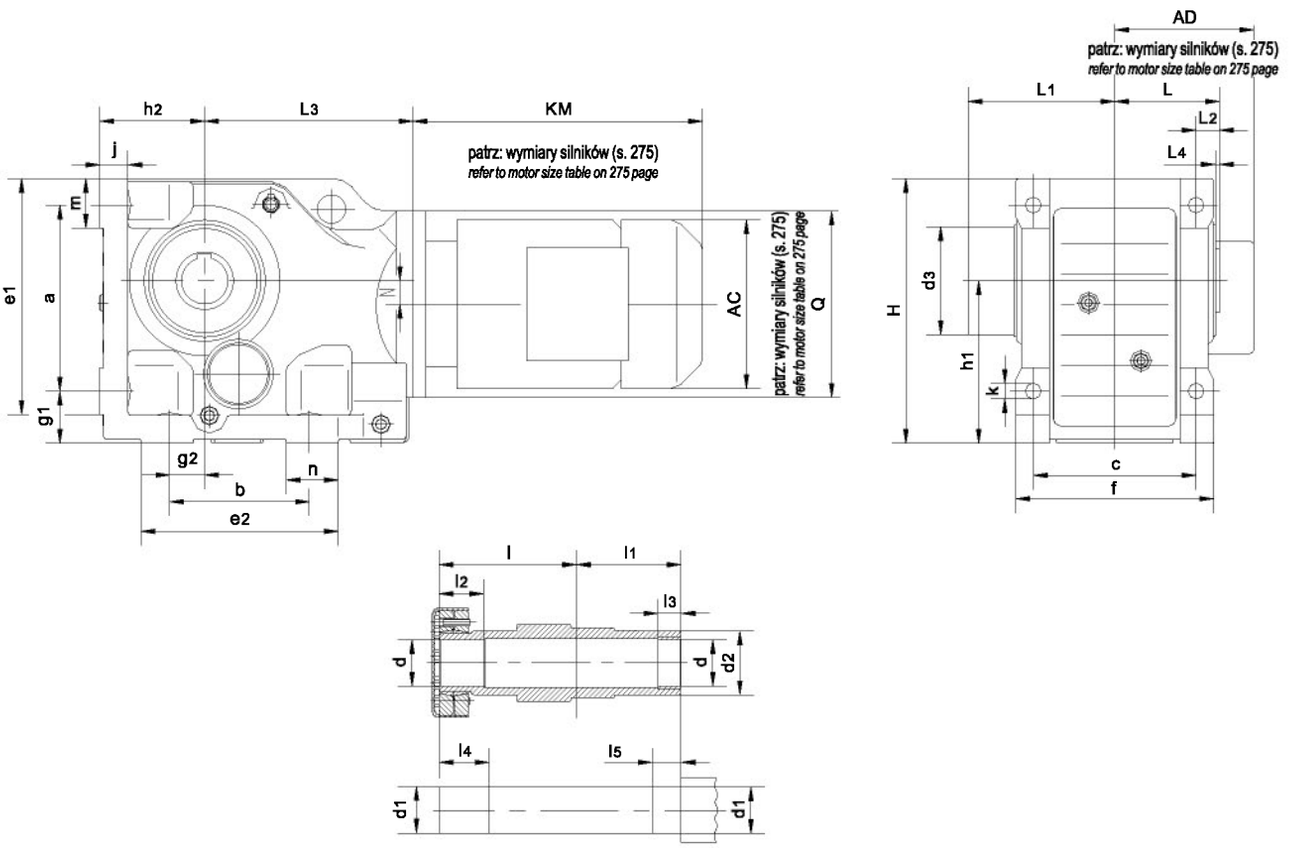

MDKV47B..~MDKV107B..

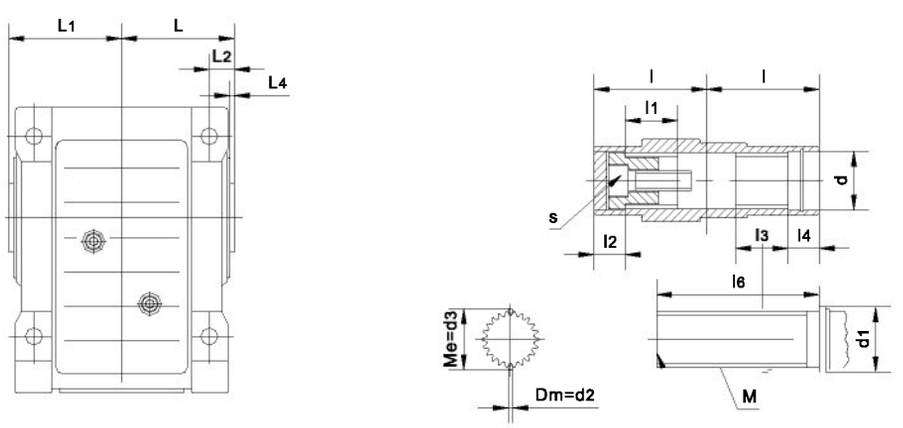

Wielkość *size*	a b c	e_1 e_2 f	g_1 g_2	h_1 h_2	j	k	m n	Wym. wału drążonego *(hollow shaft dim.)*				
								l	l1	l2	l3	l4
MDKH47B..	130	170	37	$112_{-0.5}$	18	11	37	102	75	32	20	37
MDKV47B..	130 120	162 145	35	$71_{-0.5}$			32	75	32	18	32	18
MDKH57B..	150	190	45	$132_{-0.5}$	21	13.5	43	112	83	26	20	31
MDKV57B..	130 130	172 157	30	$80_{-0.5}$			40	83	32	18	32	18
MDKH67B..	160	203	45	$140_{-0.5}$	24	13.5	43	118	90	38	20	43
MDKV67B..	120 140	170 170	30	$90_{-0.5}$			45	90	42	25	42	25
MDKH77B..	200	263	55	$180_{-0.5}$	27	17.5	55	136	105	36	30	41
MDKV77B..	150 165	208 200	40	$112_{-0.5}$			55	105	52	23	52	23
MDKH87B..	233	305	70	$212_{-0.5}$	32	22	67	161	120	41	40	46
MDKV87B..	180 180	260 230	55	$132_{-0.5}$			75	120	62	25	62	25
MDKH97B..	295	372	75	265_{-1}	36	26	82	195	150	55	50	60
MDKV97B..	240 240	294 290	75	$160_{-0.5}$			60	150	72	25	72	25
MDKH107B..	360	448	95	315_{-1}	40	33	98	230	175	65	60	75
MDKV107B..	280 270	380 340	95	$200_{-0.5}$			100	175	89	26	89	26
MDKH127B..	420	526	110	375_{-1}	45	39	111	280	205	85	70	95
	350 330	440 400	115	$225_{-0.5}$			100	-	-	-	-	-
MDKH157B..	500	634	130	450_{-1}	50	39	130	330	250	90	80	100
	380 420	480 500	140	280_{-1}			100	-	-	-	-	-

Wielkość *size*	Wymiary wału drążonego *(hollow shaft dimension)*							H	L	L_1 L_2	L_3 L_4	N	Q
	l5	d	d1	d2	d3	M	S						
MDKH47B..	25	35H7	35h6	50	83	-	-	185	75	110	166	7.2	160
MDKV47B..	115	$37^{+0.1}_{0}$	≥42	4	$38.92^{0}_{-0.03}$	35x2x30x16	M10x30			15	3		
MDKH57B..	25	40H7	40h6	55	83	-	-	217	83	117	173	13.1	160
MDKV57B..	130	$37^{+0.1}_{0}$	≥42	4	$38.92^{0}_{-0.03}$	35x2x30x16	M10x30			18	3		
MDKH67B..	25	40H7	40h6	55	93	-	-	228	90	126	179	20	160
MDKV67B..	130	$47^{+0.1}_{0}$	≥52	4	$48.85^{0}_{-0.03}$	45x2x30x21	M16x50			20	3.5		
MDKH77B..	35	50H7	50h6	70	114	-	-	288	105	146	202	31.3	200
MDKV77B..	160	$55^{+0.1}_{0}$	≥62	4	$54.13^{0}_{-0.03}$	50x2x30x24	M16x50			22.5	4		
MDKH87B..	45	65H7	65h6	85	159	-	-	340	120	170	257	25.9	250
MDKV87B..	180	$72^{+0.1}_{0}$	≥82	4	$68.96^{0}_{-0.04}$	65x2x30x31	M20x60			30	4		
MDKH97B..	55	75H7	75h6	95	174	-	-	417	150	206	277	32.3	300
MDKV97B..	240	$72^{+0.1}_{0}$	≥90	4	$74.15^{0}_{-0.04}$	70x2x30x34	M20x60			30	4		
MDKH107B..	70	95H7	95h6	118	200	-	-	503	175	245	341	52	350
MDKV107B..	290	$90^{+0.1}_{0}$	≥105	6	$90.99^{0}_{-0.04}$	85x3x30x27	M20x60			40	2.5		
MDKH127B..	80	105H7	105h6	135	233	-	-	592	205	296	390	53	450
	-	-	-	-	-	-	-			40	2.5		
MDKH157B..	90	125H7	125h6	155	315	-	-	705	250	370	426	71.7	550
	-	-	-	-	-	-	-			40	0		

MDKVZ.. Wielowypusty wykonane są zgodnie z DIN. Na życzenie mogą być wykonane w GB lub ISO.
MDKVZ.. Splined shaft is according to DIN standard. If you need GB or ISO standard, please contact us.

MDKA37..~MDKA107..

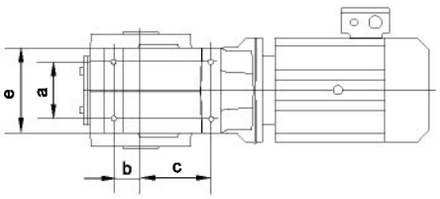

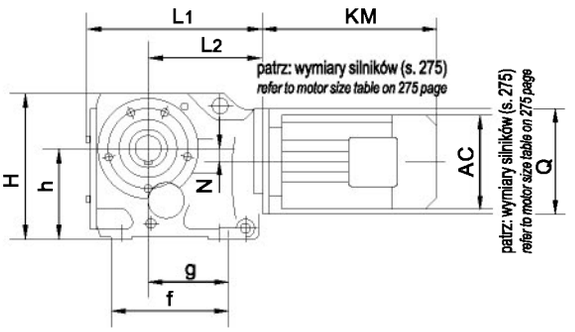

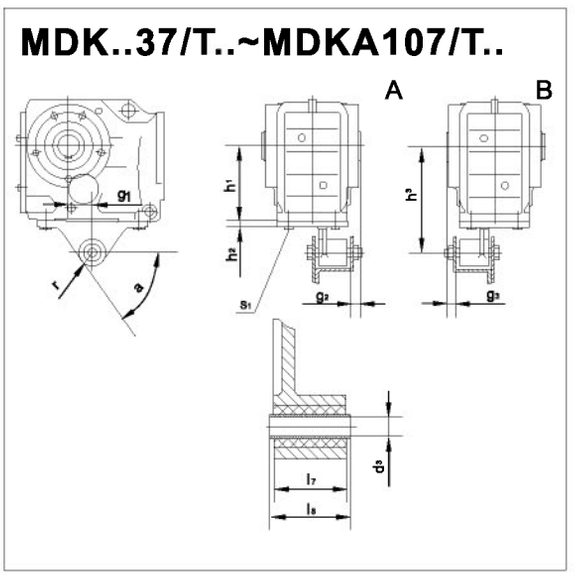

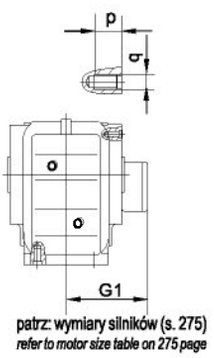

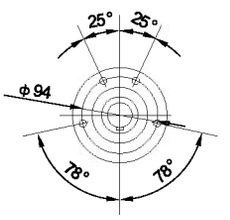

MDKA37..

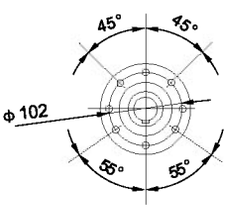

MDKA47..

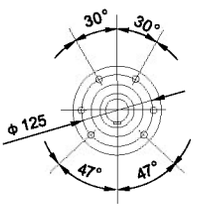

MDKA57..
MDKA67..

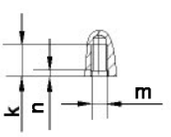

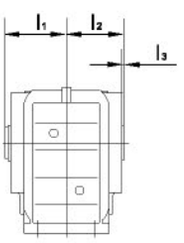

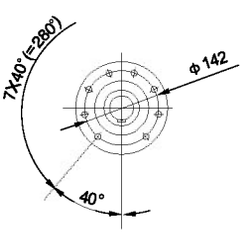

MDKA77..

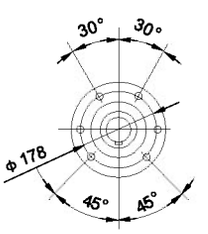

MDKA87..

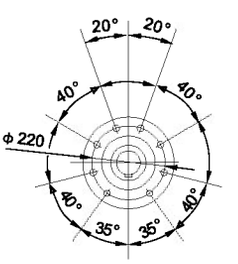

MDKA97..

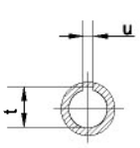

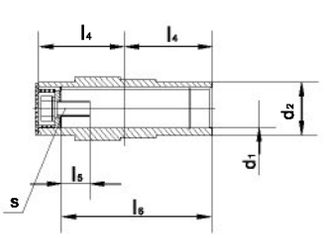

Wielkość *size*	a b c	e f g	h	k m n	p q	Wymiary wału drążonego *hollow shaft dimension*				Wymiary ramienia reakcyjnego *torque arm dimension*				H L_1 L_2	N Q
						d_1 d_2	l_1 l_2 l_3	l_4 l_5 l_6	s t u	g_1 g_2 g_3	h_1 h_2 h_3	d_3 l_7 l_8	r s_1 α		
MDKA37.. MDK..37/T..	60 35 82	100 147 97	$100_{-0.5}$	20 M10 4	12 M8	30H7 45	63 60 2.5	60 17 105	M10 33.3 8	23.5 20 20	$100_{-0.5}$ 10 $140^{+0.2}_{-0.7}$	10.4 ± 0.1 31 $36_{-0.3}$	22.5 M10X25 60°	164 210 139	8.5 120
MDKA47.. MDK..47/T..	70 40 100	110 170 115	$112_{-0.5}$	20 M10 4	12 M8	35H7 50	78 75 3	75 22 132	M12 38.3 10	30 20 20	$112_{-0.5}$ 12 $160^{+0.2}_{-0.7}$	10.4 ± 0.1 31 $36_{-0.3}$	22.5 M10X30 55°	185 243 166	7.2 160
MDKA57.. MDK..57/T..	88 47 105	122 182 120	$132_{-0.5}$	25 M12 5	20 M12	40H7 55	86 83 3	83 29 142	M16 43.3 12	40 18 18	$132_{-0.5}$ 13 $192^{+0.2}_{-0.7}$	16.4±0.08 54 $60_{-0.3}$	29 M12X35 55°	215 269 173	13.1 160
MDKA67.. MDK..67/T..	88 42 110	130 182 125	$140_{-0.5}$	25 M12 5	20 M12	40H7 55	94 90 3.5	90 29 156	M16 43.3 12	45 25 25	$140_{-0.5}$ 13 $200^{+0.2}_{-0.7}$	16.4±0.08 54 $60_{-0.3}$	29 M12X35 55°	226 274 179	20 160
MDKA77.. MDK..77/T..	102 48 122	154 204 139	$180_{-0.5}$	32 M16 6	20 M12	50H7 70	108 105 4	105 32 183	M16 53.8 14	52.5 25 25	$180_{-0.5}$ 14 $250^{+0.2}_{-0.7}$	16.4±0.08 54 $60_{-0.3}$	29 M16X40 60°	286 312 202	31.3 200
MDKA87.. MDK..87/T..	118 65 160	170 280 190	$212_{-0.5}$	32 M16 6	26 M16	60H7 85	123 120 4	120 36 210	M20 64.4 18	60 30 30	$212_{-0.5}$ 16 $300^{+0.2}_{-0.7}$	25±0.08 72 $80_{-0.3}$	41 M16X45 60°	338 390 257	25.9 250
MDKA97.. MDK..97/T..	160 83 165	226 298 190	265_{-1}	36 M20 6	26 M16	70H7 95	153 150 4	150 34 270	M20 74.9 20	70 40 40	265_{-1} 17 $350^{+0.2}_{-1.2}$	25 ± 0.08 92 $100_{-0.3}$	41 M20X50 50°	414 435 277	32.3 300
MDKA107.. MDK..107/T..	190 100 190	266 370 230	315_{-1}	44 M24 8	-	90H7 118	178 175 2.5	175 40 313	M24 95.4 25	74 45 45	315_{-1} 20 $450^{+0.5}_{-1.5}$	25 ± 0.08 92 $100_{-0.3}$	41 M24X60 55°	500 537 341	52 350

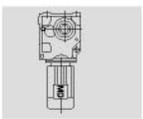

MDKH37..~MDKH107..

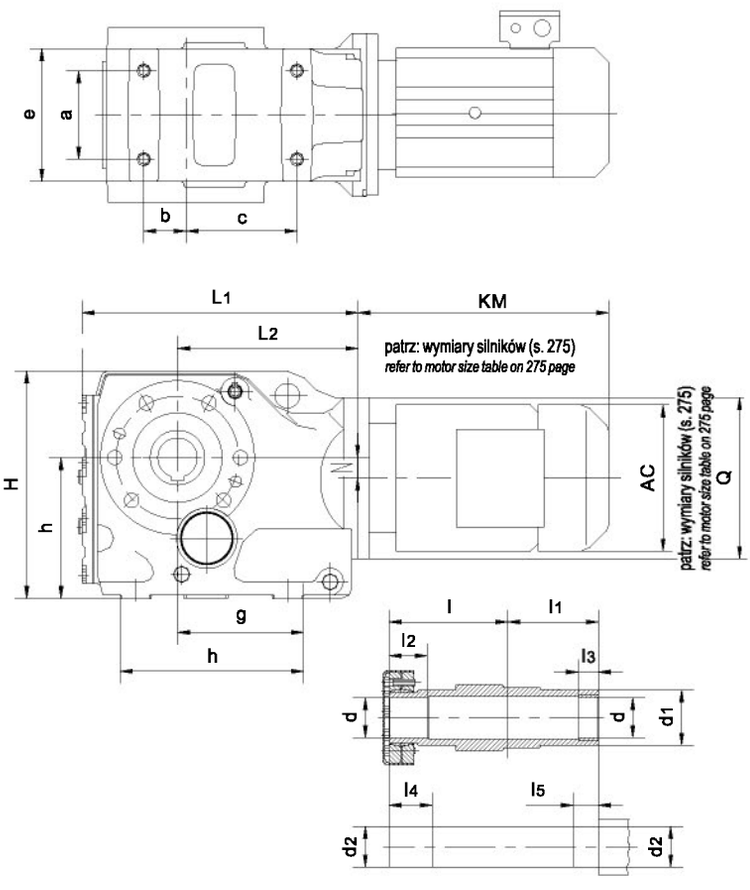

MDK..37/T..~MDKA107/T..

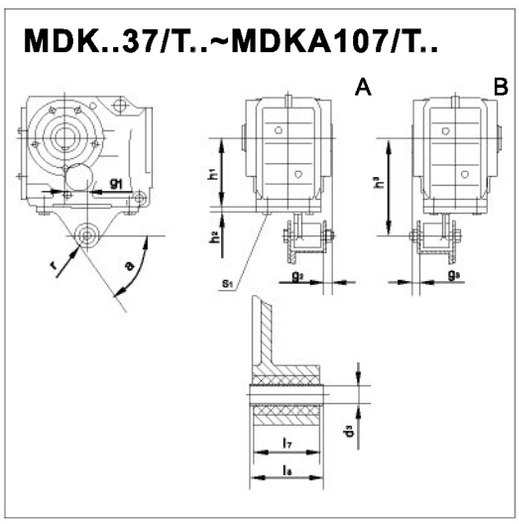

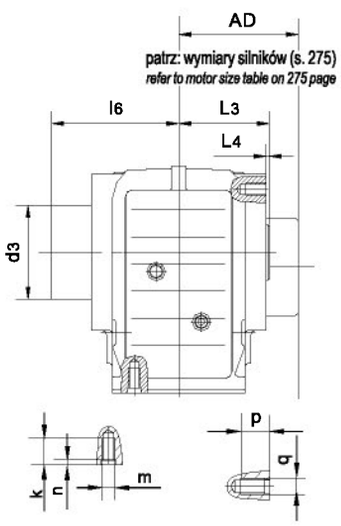

MDKV37..~MDKV107..

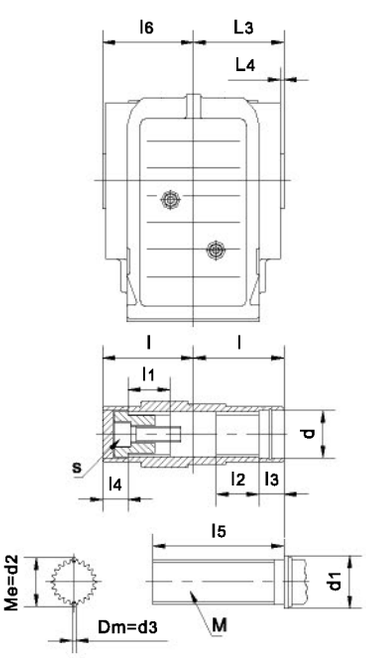

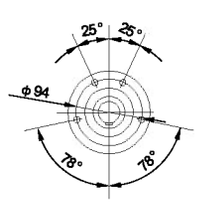

MDK..37..

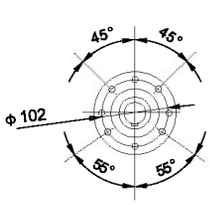

MDK..47..

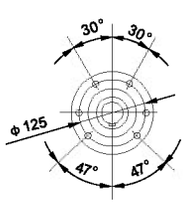

MDK..57..
MDK..67..

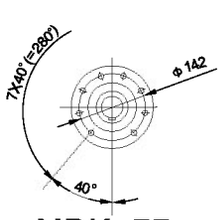

MDK..77..

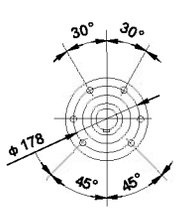

MDK..87..

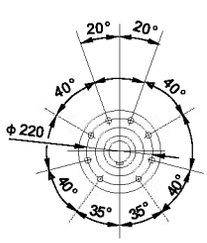

MDK..97..

Wielkość *size*	a b c	e f g	h	k m n	p q	l	l_1	l_2	l_3	l_4	l_5	l_6
MDKH37.. MDKV37..	60 35 82	100 147 97	$100_{-0.5}$	20 M10 4	12 M8	86 60	60 25	31 25	20 18	36 18	25 85	95 62
MDKH47.. MDKV47..	70 40 100	110 170 115	$112_{-0.5}$	20 M10 4	12 M8	102 75	75 32	32 32	20 18	37 18	25 115	110 77
MDKH57.. MDKV57..	88 47 105	122 182 120	$132_{-0.5}$	25 M12 5	20 M12	112 83	83 32	26 32	20 18	31 18	25 130	117 85
MDKH67.. MDKV67..	88 42 110	130 182 125	$140_{-0.5}$	25 M12 5	20 M12	118 90	90 42	38 42	20 25	43 25	25 130	126 90
MDKH77.. MDKV77..	102 48 122	154 204 139	$180_{-0.5}$	32 M16 6	20 M12	136 105	105 52	36 52	30 23	41 23	35 160	146 105
MDKH87.. MDKV87..	118 65 160	170 280 190	$212_{-0.5}$	32 M16 6	26 M16	161 120	120 62	41 62	40 25	46 25	45 180	170 120
MDKH97.. MDKV97..	160 83 165	226 298 190	$265_{-0.5}$	36 M20 6	26 M16	195 150	150 72	55 72	50 25	60 25	55 240	206 150
MDKH107.. MDKV107..	190 100 190	266 370 230	$315_{-0.5}$	44 M24 8	-	230 175	175 89	65 89	60 26	75 26	70 290	245 178

Wielkość *size*	d	d_1	d_2	d_3	s	M	g_1 g_2 g_3	h_1 h_2 h_3	d_3 l_7 l_8	r s_1 a	L_1 L_2 L_3	L_4 H	N Q
MDKH37.. MDKV37..	30H7 $37^{+0.1}_{0}$	45 ≥42	30h6 $33.03^{0}_{-0.03}$	75 2.75	- M10x30	- 30x1.25x30x22	23.5 20 20	$100_{-0.5}$ 10 $140^{+0.2}_{-0.7}$	10.4±0.1 31 $36_{-0.3}$	22.5 M10X25 60°	210 139 60	2.5 164	8.5 120
MDKH47.. MDKV47..	35H7 $37^{+0.1}_{0}$	50 ≥42	35h6 $38.92^{0}_{-0.03}$	83 4	- M10x30	- 35x2x30x16	30 20 20	$112_{-0.5}$ 10 $160^{+0.2}_{-0.7}$	10.4±0.1 31 $36_{-0.3}$	22.5 M10X25 55°	243 166 75	3 185	7.2 160
MDKH57.. MDKV57..	40H7 $37^{+0.1}_{0}$	55 ≥42	40h6 $38.92^{0}_{-0.03}$	83 4	- M10x30	- 35x2x30x16	40 18 18	$132_{-0.5}$ 13 $192^{+0.2}_{-0.7}$	16.4±0.08 54 $60_{-0.3}$	29 M12X35 55°	269 173 83	3 215	13.1 160
MDKH67.. MDKV67..	40H7 $47^{+0.1}_{0}$	55 ≥52	40h6 $48.85^{0}_{-0.03}$	93 4	- M16x50	- 45x2x30x21	45 25 25	$140_{-0.5}$ 13 $200^{+0.2}_{-0.7}$	16.4±0.08 54 $60_{-0.3}$	29 M12X35 55°	274 179 90	3.5 226	20 160
MDKH77.. MDKV77..	50H7 $55^{+0.1}_{0}$	70 ≥62	50h6 $54.13^{0}_{-0.03}$	114 4	- M16x50	- 50x2x30x24	52.5 25 25	$180_{-0.5}$ 14 $250^{+0.2}_{-0.7}$	16.4±0.08 54 $60_{-0.3}$	29 M16X40 60°	312 202 105	4 286	31.3 200
MDKH87.. MDKV87..	65H7 $72^{+0.1}_{0}$	85 ≥82	65h6 $68.96^{0}_{-0.04}$	159 4	- M20x60	- 65x2x30x31	60 30 30	$212_{-0.5}$ 16 $300^{+0.2}_{-0.7}$	25±0.08 72 $80_{-0.3}$	41 M16X45 60°	390 257 4	120 4	25.9 250
MDKH97.. MDKV97..	75H7 $72^{+0.1}_{0}$	95 ≥90	75h6 $74.15^{0}_{-0.04}$	174 4	- M20x60	- 70x2x30x34	70 40 40	265_{-1} 17 $350^{+0.2}_{-0.7}$	25±0.08 92 $100_{-0.3}$	41 M20X50 50°	435 277 150	4 414	32.3 300
MDKH107.. MDKV107..	95H7 $90^{+0.1}_{0}$	118 ≥105	95h6 $90.99^{0}_{-0.04}$	200 6	- M20x60	- 85x3x30x27	74 45 45	315_{-1} 20 $450^{+0.5}_{-1.5}$	25±0.08 92 $100_{-0.3}$	41 M24X60 55°	537 341 175	2.5 500	52 350

MDKV.. Wielowypusty wykonane są zgodnie z DIN. Na życzenie mogą być wykonane w GB lub ISO.
MDKV.. Splined shaft is according to DIN standard. If you need GB or ISO standard, please contact us.

MDKF37..~MDKF157..

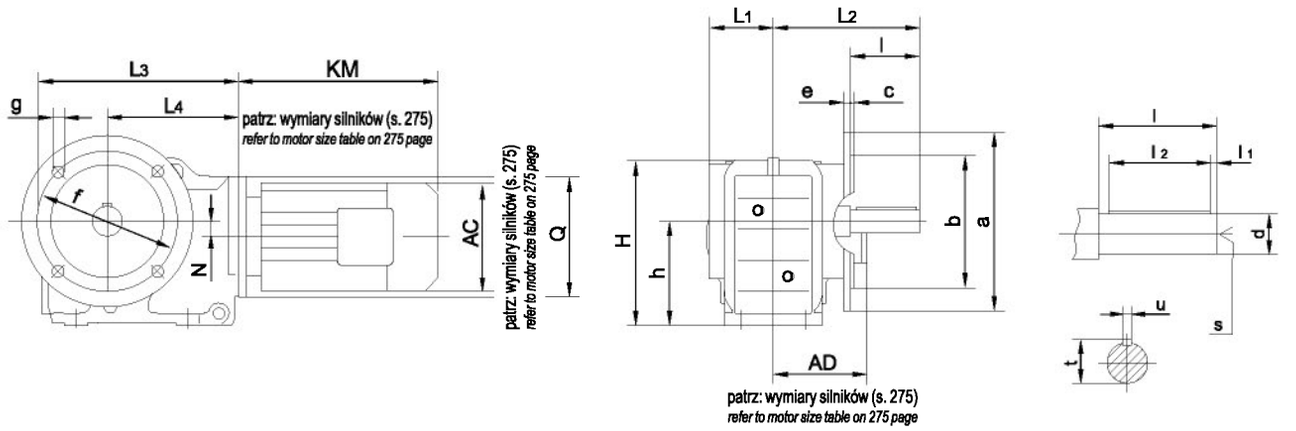

MDKAF37..~MDKAF157..

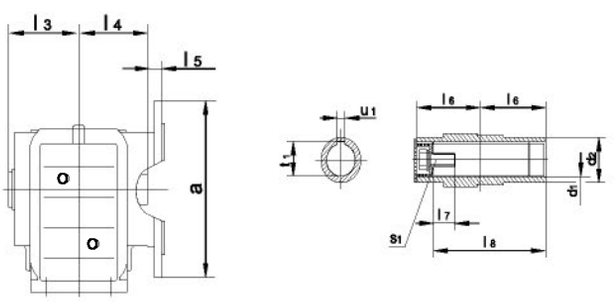

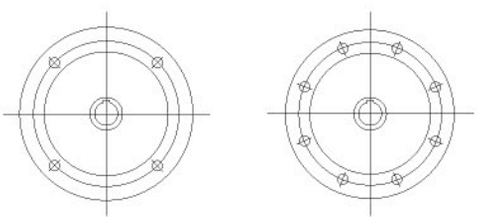

Flg.1 Flg.2

wersja kołnierzowa
flange form

Wielkość *size*	Kołnierz *flange*	a b	c e	f g h	Wymiary wału *shaft dimension* d l	l_1 l_2	s	t u	Wymiary wału drążonego *hollow shaft dimension* d_1 d_2	l_3 l_4 l_5	l_6 l_7 l_8	s_1	t_1 u_1	H	L_1 L_2 L_3	L_4 N Q
MDKF37.. MDKAF37..	Flg.1	160 110j6	3.5 10	130 9 100	25k6 50	5 40	M10	28 8	30H7 45	63 60 24	60 17 105	M10 X 25	33.3 8	164	57.5 134 210	139 8.5 120
MDKF47.. MDKAF47..	Flg.1	200 130j6	3.5 10	165 11 112	30k6 60	3.5 50	M10	33 8	35H7 50	78 75 25	75 22 132	M12 X 30	38.3 10	185	72 160 243	166 7.2 160
MDKF57.. MDKAF57..	Flg.1	250 180j6	4 15	215 13.5 132	35k6 70	7 56	M12	38 10	40H7 55	86 83 23.5	83 29 142	M16 X 40	43.3 12	215	80 177 269	173 13.1 160
MDKF67.. MDKAF67..	Flg.1	250 180j6	4 15	215 13.5 140	40k6 80	5 70	M16	43 12	40H7 55	94 90 23	90 29 156	M16 X 40	43.3 12	226	86.5 193 274	179 20 160
MDKF77.. MDKAF77..	Flg.1	300 230j6	4 16	265 13.5 180	50k6 100	10 80	M16	53.5 14	50H7 70	108 105 37	105 32 183	M16 X 45	53.8 14	286	101 242 312	202 31.3 200
MDKF87.. MDKAF87..	Flg.1	350 250h6	5 18	300 17.5 212	60m6 120	5 110	M20	64 18	60H7 85	123 120 30	120 36 210	M20 X 50	64.4 18	338	138 270 390	257 25.9 250
MDKF97.. MDKAF97..	Flg.2	450 350h6	5 22	400 17.5 265	70m6 140	7.5 125	M20	74.5 20	70H7 95	153 150 41.5	150 34 270	M20 X 50	74.9 20	414	171 332 435	277 32.3 300
MDKF107.. MDKAF107..	Flg.2	450 350h6	5 25	400 17.5 315	90m6 170	5 160	M24	95 25	90H7 118	178 175 41	175 40 313	M24 X 60	95.4 25	500	175 386 537	341 52 350
MDKF127.. MDKAF127..	Flg.2	550 450h6	5 22	500 17.5 375-1	110m6 210	15 180	M24	116 28	100H7 135	208 205 51	205 38 373	M24 X 60	106.4 28	592	203 466 615	390 53 450
MDKF157.. MDKAF157..	Flg.2	660 550h6	6 28	600 22 450-1	120m6 210	5 200	M24	127 32	120H7 155	253 250 60	250 36 460	M24 X 60	127.4 32	705	253 520 706	705 71.7 550

MDKHF37..~MDKHF157..

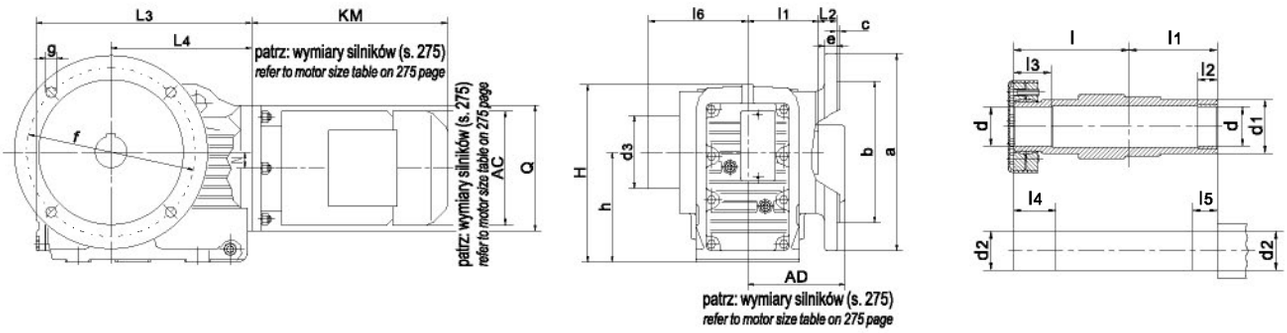

MDKVF37..~MDKVF107..

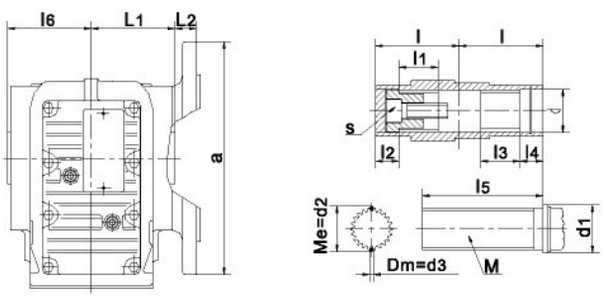

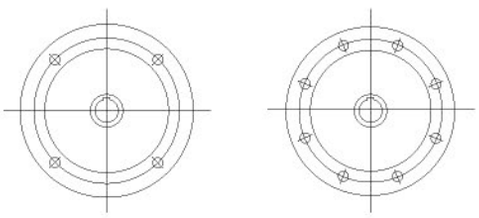

Flg.1 Flg.2

wersja kołnierzowa
flange form

Wielkość *size*	Kołnierz *flange*	a b	c e	f g h	Wymiary wału drążonego *hollow shaft dimension* l	l1	l2	l3	l4	l5	l6	d	d1	d2	d3	m	s	H	L_1 L_2 L_3	L_4 N Q
MDKHF37..	Flg.1	160	3.5	130 9	86	60	20	31	36	25	95	30H7	45	30h6	75	-	-	164	60 24	139 8.5
MDKVF37..		110j6	10	100-0.5	60	25	18	25	18	85	62	$37^{+0.10}_{0}$	≥42	$33.03^{0}_{-0.03}$	2.75	30×1.25×30×22	M10X30		210	120
MDKHF47..	Flg.1	200	3.5	165 11	102	75	20	32	37	25	110	35H7	50	35h6	83	-	-	185	75 25	166 7.2
MDKVF47..		130j6	10	112-0.5	75	32	18	32	18	115	77	$37^{+0.10}_{0}$	≥42	$38.92^{0}_{-0.03}$	4	35×2×30×16	M10X30		243	160
MDKHF57..	Flg.1	250	4	215 13.5	112	83	20	26	31	25	117	40H7	55	40h6	83	-	-	215	83 23.5	173 13.1
MDKVF57..		180j6	15	132-0.5	83	32	18	32	18	130	85	$37^{+0.10}_{0}$	≥42	$38.92^{0}_{-0.03}$	4	35×2×30×16	M10X30		269	160
MDKHF67..	Flg.1	250	4	215 13.5	118	90	20	38	43	25	126	40H7	55	40h6	93	-	-	226	90 23	179 20
MDKVF67..		180j6	15	140-0.5	90	42	25	42	25	130	90	$47^{+0.10}_{0}$	≥52	$48.85^{0}_{-0.03}$	4	45×2×30×21	M16X50		274	160
MDKHF77..	Flg.1	300	4	265 13.5	136	105	30	36	41	35	146	50H7	70	50h6	114	-	-	286	105 37	202 31.3
MDKVF77..		230j6	16	180-0.5	105	52	23	52	23	160	105	$55^{+0.10}_{0}$	≥62	$54.13^{0}_{-0.03}$	4	50×2×30×24	M16X50		312	200
MDKHF87..	Flg.1	350	5	300 17.5	161	120	40	41	46	45	170	65H7	85	65h6	159	-	-	338	120 30	257 25.9
MDKVF87..		250h6	18	212-0.5	120	62	25	62	25	180	120	$72^{+0.10}_{0}$	≥82	$68.96^{0}_{-0.04}$	4	65×2×30×31	M20X60		390	250
MDKHF97..	Flg.2	450	5	400 17.5	195	150	50	55	60	55	206	75H7	95	75h6	174	-	-	414	150 41.5	277 32.3
MDKVF97..		350h6	22	265-0.5	150	72	25	72	25	240	150	$72^{+0.10}_{0}$	≥90	$74.15^{0}_{-0.04}$	4	70×2×30×34	M20X60		435	300
MDKHF107..	Flg.2	450	5	400 17.5	230	175	60	65	75	70	245	95H7	118	95h6	200	-	-	500	175 41	341 52
MDKVF107..		350h6	25	315-0.5	175	89	26	89	26	290	178	$90^{+0.10}_{0}$	≥105	$90.99^{0}_{-0.04}$	6	85×3×20×27	M20X60		537	350
MDKHF127..	Flg.2	550	5	500 17.5	280	205	70	85	95	80	296	105H7	135	105h6	233	-	-	592	205 51	390 53
		450h6	22	375-1	-	-	-	-	-	-	-	-	-	-	-	-	-		615	450
MDKHF157..	Flg.2	660	6	600 22	330	250	80	90	100	90	370	125H7	155	125h6	315	-	-	705	250 60	705 71.7
		550h6	28	450-1	-	-	-	-	-	-	-	-	-	-	-	-	-		706	550

MDKVF.. Wielowypusty wykonane są zgodnie z DIN. Na życzenie mogą być wykonane w GB lub ISO.
MDKVF.. Splined shaft is according to DIN standard. If you need GB or ISO standard, please contact us.

MDKAZ37..~MDKAZ157..

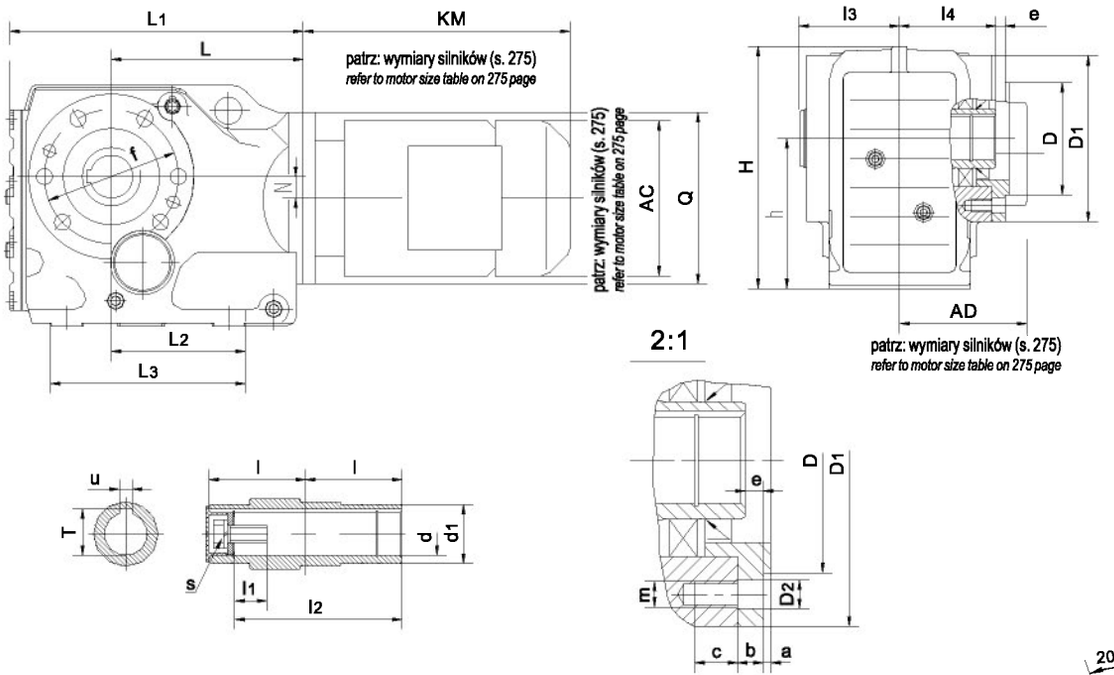

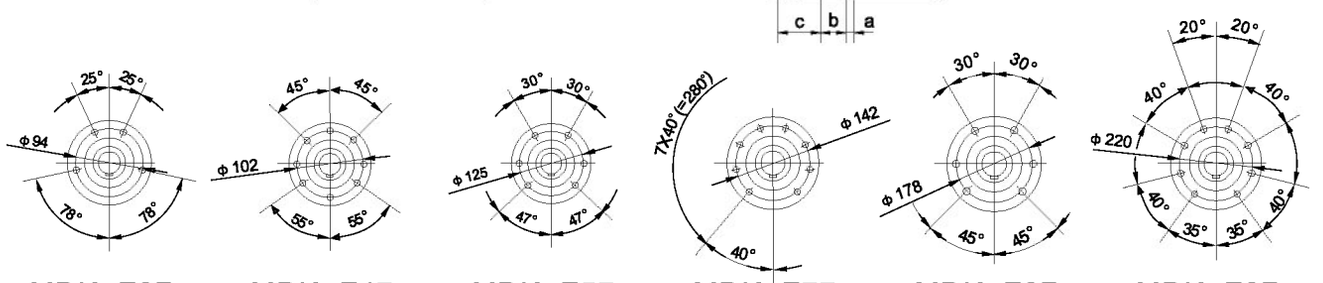

MDK..Z37.. MDK..Z47.. MDK..Z57.. MDK..Z67.. MDK..Z77.. MDK..Z87.. MDK..Z97..

MDKHZ37..~MDKHZ157..

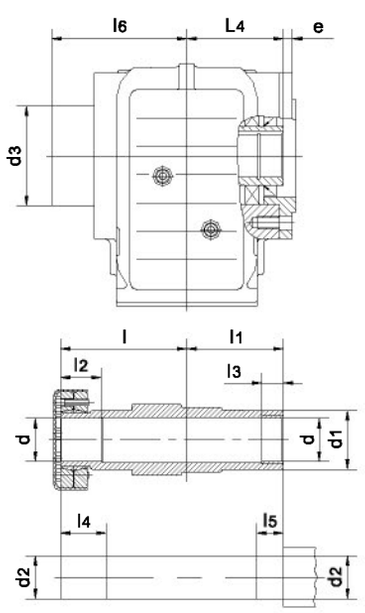

MDKVZ37..~MDKVZ107..

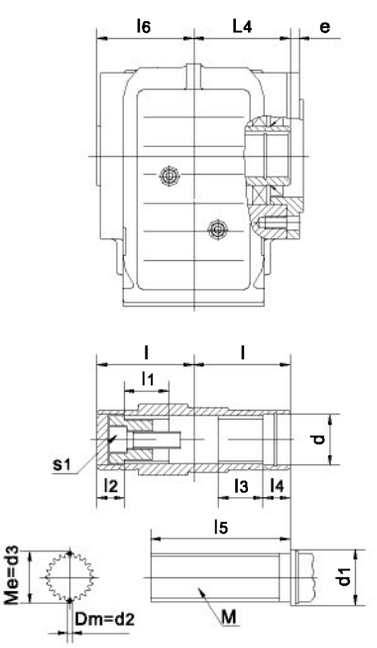

Wielkość *size*	a b c	e m D	D_1 D_2 L	L_1 L_2 L_3	L_4 f n	l	l1	l2	l3	l4	l5
MDKAZ37..	3	9	110	210	60	60	17	105	63	-	-
MDKHZ37..	11.5	M8	9	97	94	86	60	31	20	36	25
MDKVZ37..	12	80j6	139	147	8.5	60	25	18	25	18	85
MDKAZ47..	3	8.5	120	243	75	75	22	132	78	-	-
MDKHZ47..	11	M8	9	115	102	102	75	32	20	37	25
MDKVZ47..	12	80j6	166	170	7.2	75	32	18	32	18	115
MDKAZ57..	3.5	9	155	269	90	83	29	142	86	-	-
MDKHZ57..	12	M12	13.5	120	125	112	83	26	20	31	25
MDKVZ57..	20	105j6	173	182	13.1	83	32	18	32	18	130
MDKAZ67..	3.5	8.5	155	274	105	90	29	156	94	-	-
MDKHZ67..	12	M12	13.5	125	125	118	90	38	20	43	25
MDKVZ67..	20	105j6	179	182	20	90	42	25	42	25	130
MDKAZ77..	3.5	10	170	312	105	105	32	183	108	-	-
MDKHZ77..	14	M12	13.5	139	142	136	105	36	30	41	35
MDKVZ77..	20	125j6	202	204	31.3	105	52	23	52	23	160
MDKAZ87..	4	11	215	390	120	120	36	210	123	-	-
MDKHZ87..	15	M16	17.5	190	178	161	120	41	40	46	45
MDKVZ87..	26	155j6	257	280	25.9	120	62	25	62	25	180
MDKAZ97..	4	14	260	435	150	150	34	270	153	-	-
MDKHZ97..	18	M16	17.5	190	220	195	150	55	50	60	55
MDKVZ97..	26	180j6	277	298	32.5	150	72	25	72	25	240
MDKAZ107..	4	12	304	537	175	175	40	313	178	-	-
MDKHZ107..	22	M20	22	230	260	230	175	65	60	75	70
MDKVZ107..	30	210j6	341	370	52	175	89	26	89	26	290
MDKAZ127..	5	0	350	615	205	205	38	373	208	-	-
MDKHZ127..	30	M20	22	288	300						
	28	250h6	390	440	53	280	205	85	70	95	80
MDKAZ157..	5	14	400	706	250	250	36	460	253	-	-
MDKHZ157..	28	M24	26	298	340						
	36	290h6	426	480	71.7	330	250	90	80	100	90

Wielkość *size*	l6	d	d1	d2	d3	u	T	S	S1	M
MDKAZ37..	-	30H7	45	-	-	8	33.3	M10×25	-	-
MDKHZ37..	95	30H7	45	30h6	75	-	-	-	-	-
MDKVZ37..	62	$30^{+0.1}_{0}$	≥42	2.75	$33.03^{0}_{-0.03}$	-	-	-	M10×30	30×1.25×30×22
MDKAZ47..	-	35H7	50	-	-	10	38.3	M12×30	-	-
MDKHZ47..	110	35H7	50	35h6	83	-	-	-	-	-
MDKVZ47..	77	$37^{+0.1}_{0}$	≥42	4	$38.92^{0}_{-0.03}$	-	-	-	M10×30	35×2×30×16
MDKAZ57..	-	40H7	55	-	-	12	43.3	M16×40	-	-
MDKHZ57..	117	40H7	55	40h6	83	-	-	-	-	-
MDKVZ57..	85	$37^{+0.1}_{0}$	≥42	4	$38.92^{0}_{-0.03}$	-	-	-	M10×30	35×2×30×16
MDKAZ67..	-	40H7	55	-	-	12	43.3	M16×40	-	-
MDKHZ67..	126	40H7	55	40h6	93	-	-	-	-	-
MDKVZ67..	90	$47^{+0.1}_{0}$	≥52	4	$48.85^{0}_{-0.03}$	-	-	-	M16×50	45×2×30×21
MDKAZ77..	-	50H7	70	-	-	14	53.8	M16×45	-	-
MDKHZ77..	146	50H7	70	50h6	114	-	-	-	-	-
MDKVZ77..	105	$55^{+0.1}_{0}$	≥62	4	$54.13^{0}_{-0.03}$	-	-	-	M16×50	50×2×30×24
MDKAZ87..	-	60H7	85	-	-	18	64.4	M20×50	-	-
MDKHZ87..	170	65H7	85	65h6	159	-	-	-	-	-
MDKVZ87..	120	$72^{+0.1}_{0}$	≥82	4	$68.96^{0}_{-0.04}$	-	-	-	M20×60	65×2×30×31
MDKAZ97..	-	70H7	95	-	-	20	74.9	M20×50	-	-
MDKHZ97..	206	75H7	95	75h6	174	-	-	-	-	-
MDKVZ97..	150	$72^{+0.1}_{0}$	≥90	4	$74.15^{0}_{-0.04}$	-	-	-	M20×60	70×2×30×34
MDKAZ107..	-	90H7	118	-	-	25	95.4	M24×60	-	-
MDKHZ107..	245	95H7	118	95h6	200	-	-	-	-	-
MDKVZ107..	178	$90^{+0.1}_{0}$	≥105	6	$90.99^{0}_{-0.04}$	-	-	-	M20×60	85×3×30×27
MDKAZ127..	-	100H7	135	-	-	28	106.4	M24×60	-	-
MDKHZ127..	296	105H7	135	105h6	233	-	-	-	-	-
MDKAZ157..	-	120H7	155	-	-	32	127.4	-	-	-
MDKHZ157..	370	125H7	155	125h6	315	-	-	-	-	-

MDKVZ.. Wielowypusty wykonane są zgodnie z DIN. Na życzenie mogą być wykonane w GB lub ISO.
MDKVZ.. Splined shaft is according to DIN standard. If you need GB or ISO standard, please contact us.

MDK127..

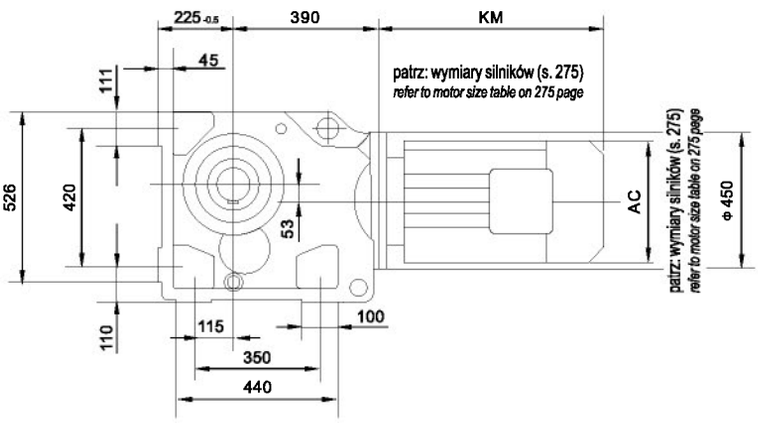

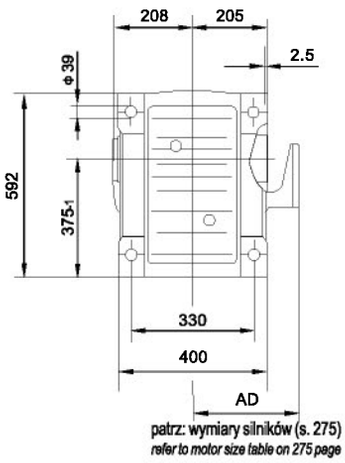

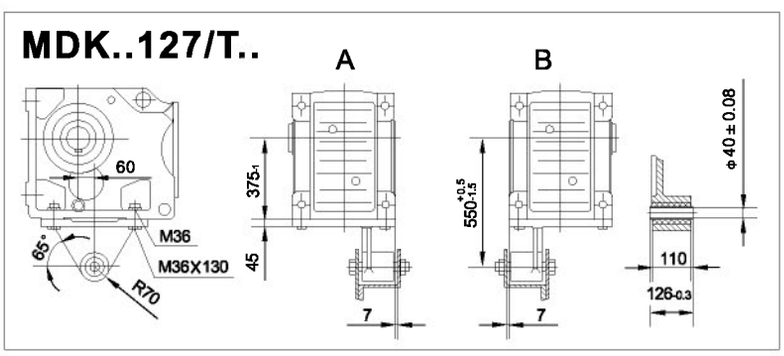

MDKA127..

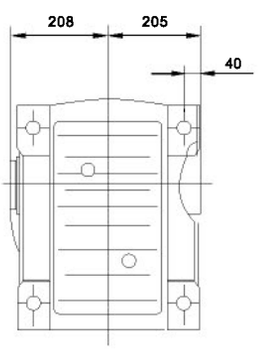

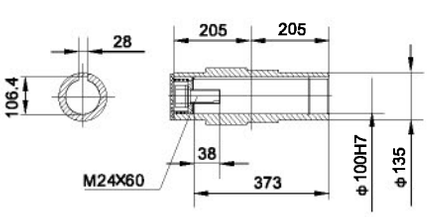

MDKH127..

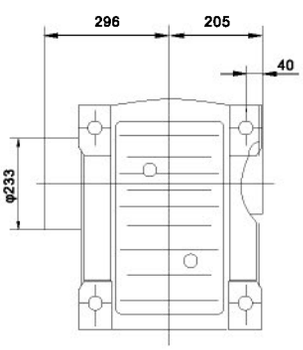

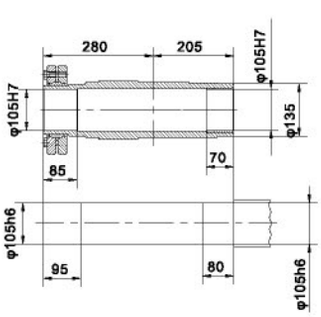

MDK157..

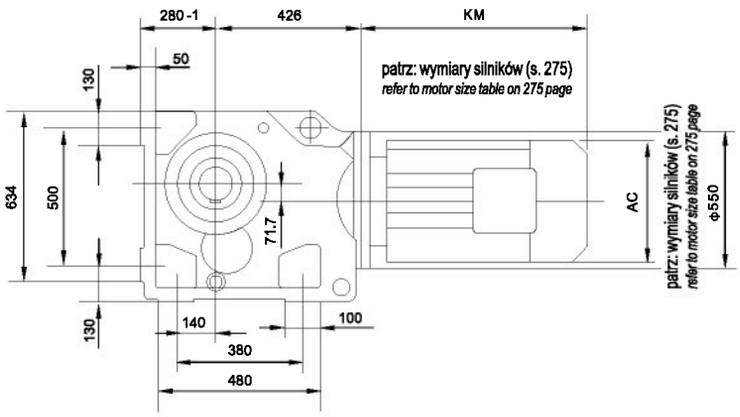

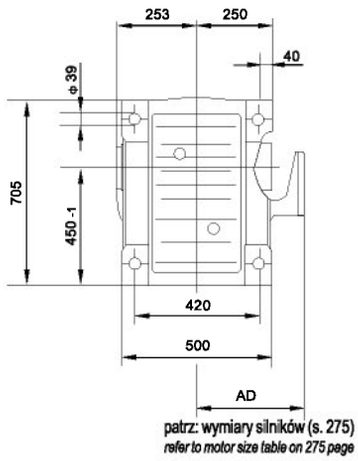

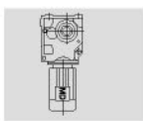

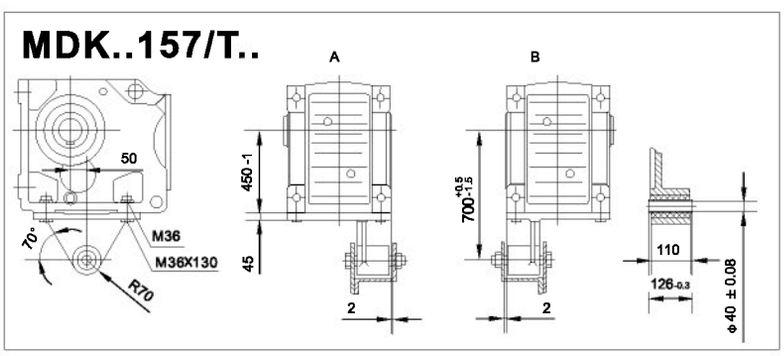

MDKA157..

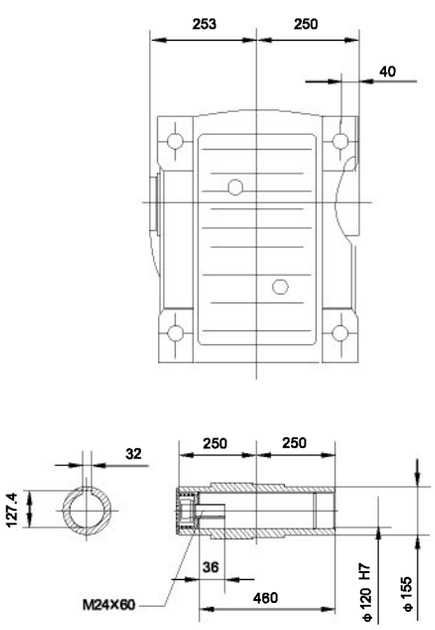

MDKH157..

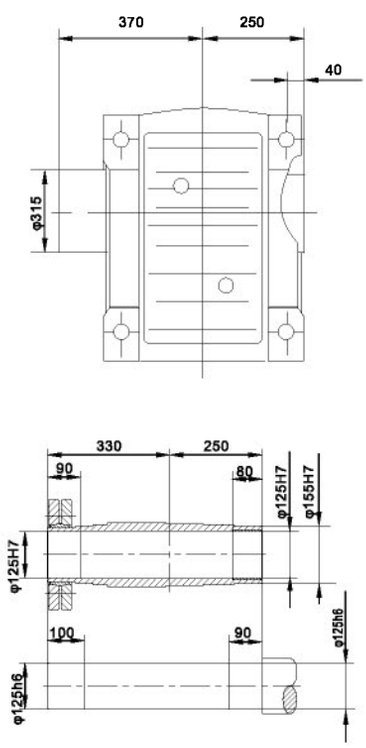

MDK167..

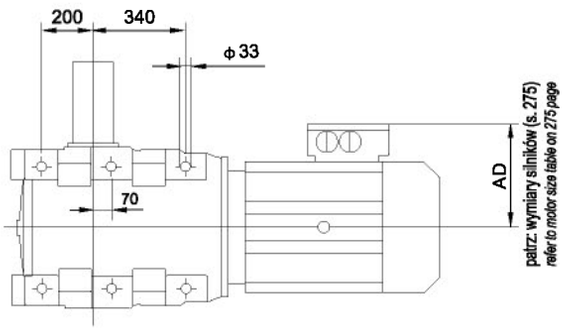
200
340
ϕ33
70
AD
patrz: wymiary silników (s. 275)
refer to motor size table on 275 page

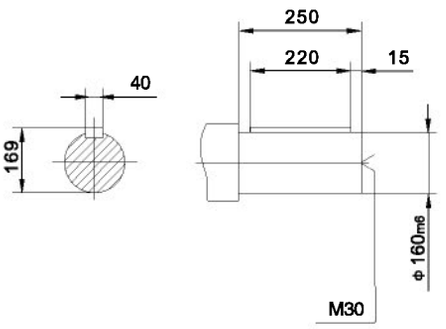
250
220
15
40
169
ϕ160m6
M30

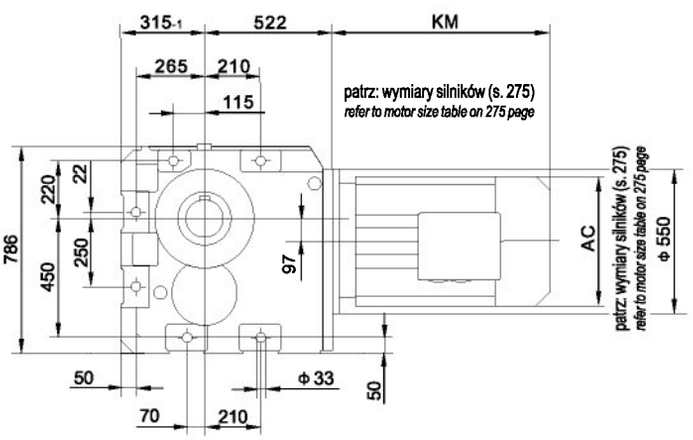
315-1
522
KM
265
210
115
patrz: wymiary silników (s. 275)
refer to motor size table on 275 page
220
22
250
786
450
97
AC
ϕ550
patrz: wymiary silników (s. 275)
refer to motor size table on 275 page
50
ϕ33
50
70
210

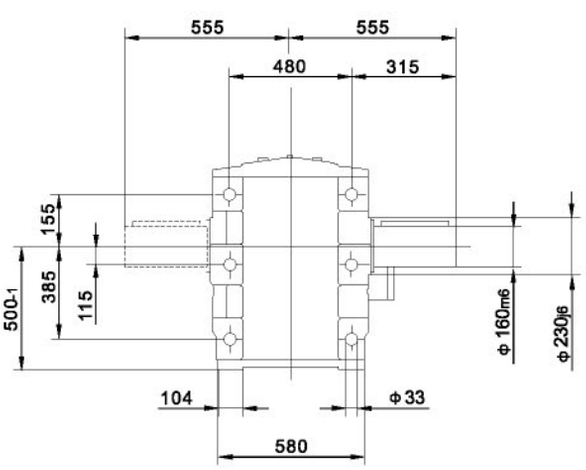
555
555
480
315
155
385
115
500-1
ϕ160m6
ϕ230j6
104
ϕ33
580

MDKH167..

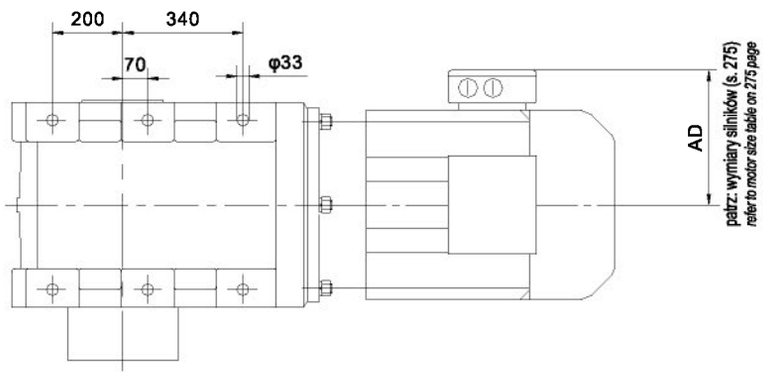
200
340
70
φ33
AD
patrz: wymiary silników (s. 275)
refer to motor size table on 275 page

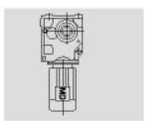

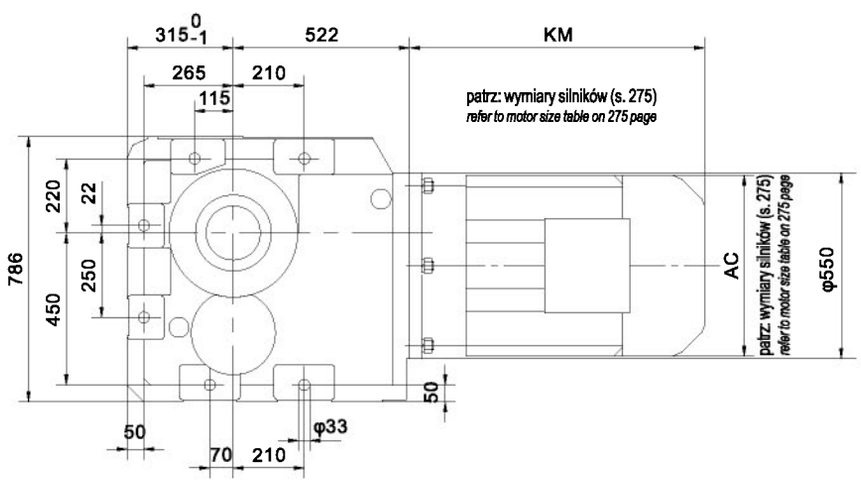
315 0 -1
522
KM
265
210
115
patrz: wymiary silników (s. 275)
refer to motor size table on 275 page
220
22
250
786
450
AC
φ550
50
50
70
210
φ33

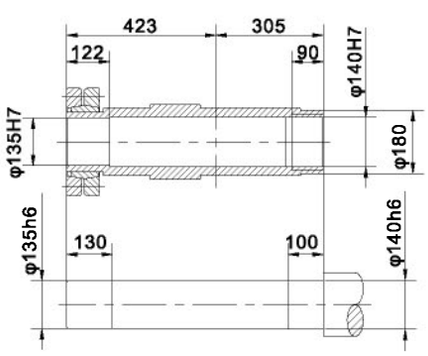
423
305
122
90
φ140H7
φ135H7
φ180
φ135h6
130
100
φ140h6

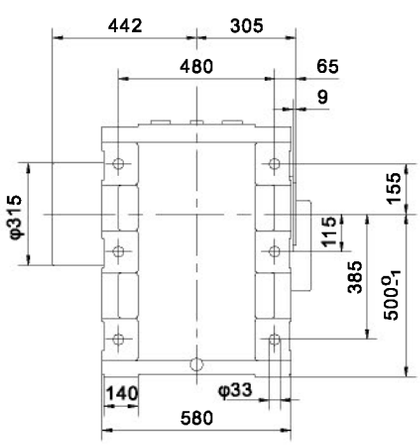
442
305
480
65
9
φ315
155
115
385
500 0 -1
140
φ33
580

MDK187..

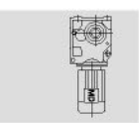

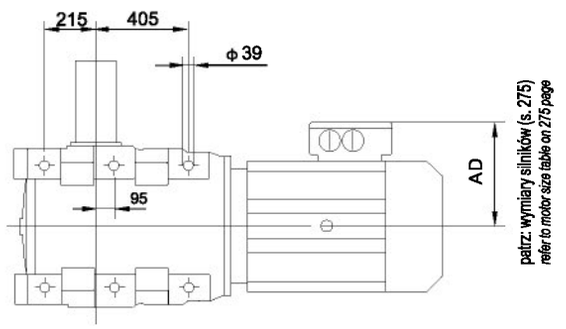
215
405
ϕ 39
95
AD
patrz: wymiary silników (s. 275)
refer to motor size table on 275 page

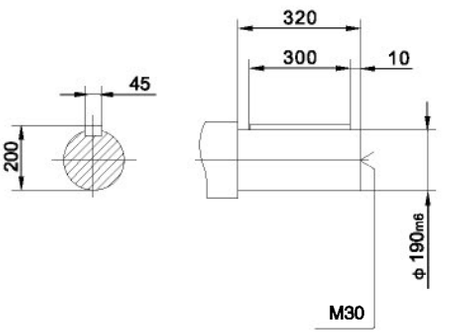
320
300
10
45
200
ϕ 190m6
M30

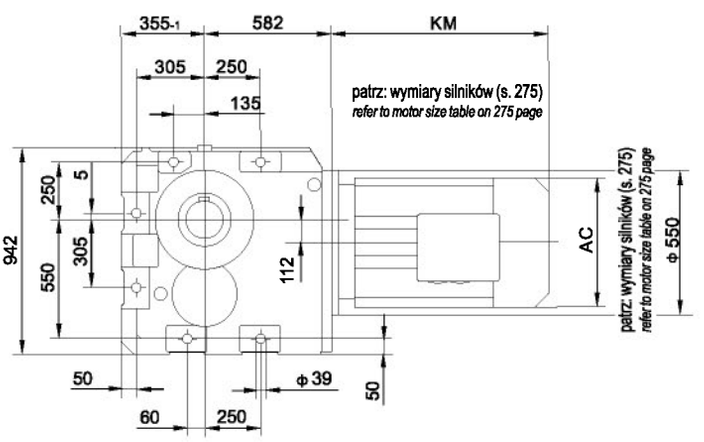
355-1
582
KM
305
250
135
patrz: wymiary silników (s. 275)
refer to motor size table on 275 page
250
5
305
942
550
112
AC
ϕ 550
50
ϕ 39
50
60
250

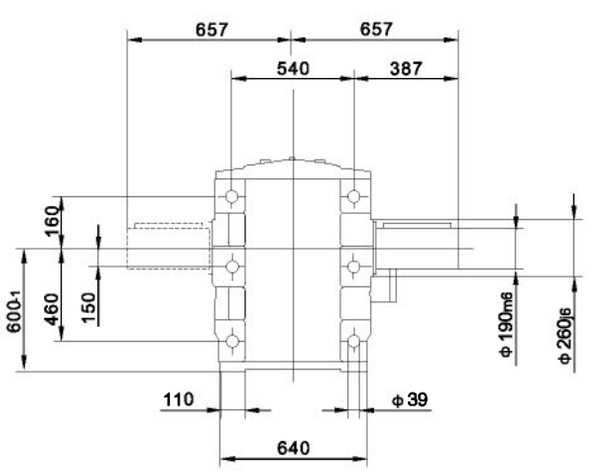
657
657
540
387
160
600-1
460
150
ϕ 190m6
ϕ 260j6
110
ϕ 39
640

MDKH187..

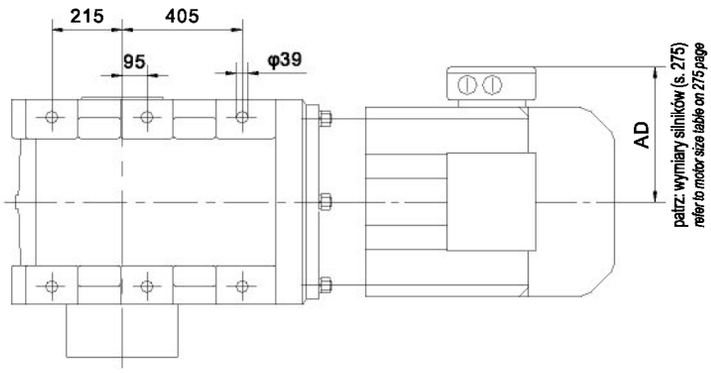
215
405
95
φ39
AD
patrz: wymiary silników (s. 275)
refer to motor size table on 275 page

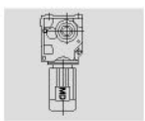

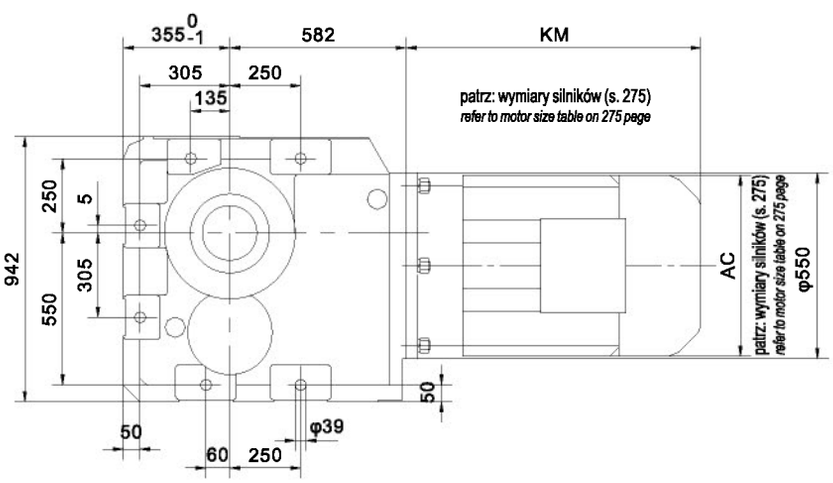
355 0 -1
582
KM
305
250
135
patrz: wymiary silników (s. 275)
refer to motor size table on 275 page
250
5
942
305
550
AC
φ550
patrz: wymiary silników (s. 275)
refer to motor size table on 275 page
50
50
φ39
60
250

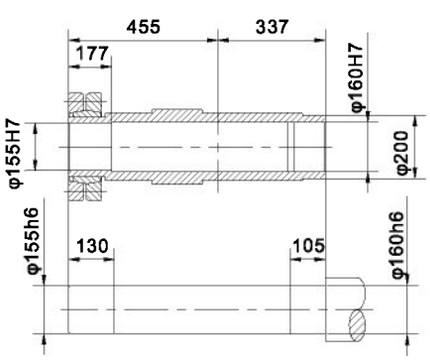
455
337
177
φ160H7
φ155H7
φ200
φ155h6
130
105
φ160h6

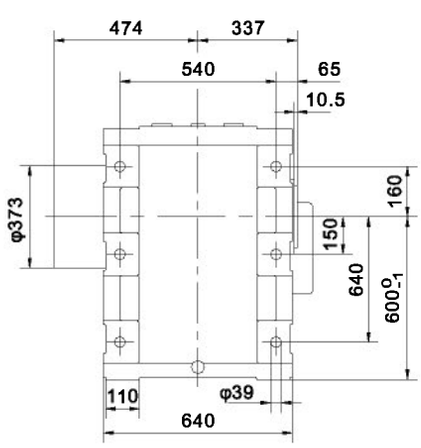
474
337
540
65
10.5
φ373
160
150
640
600 0 -1
110
φ39
640

MDK..AD..

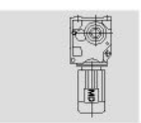

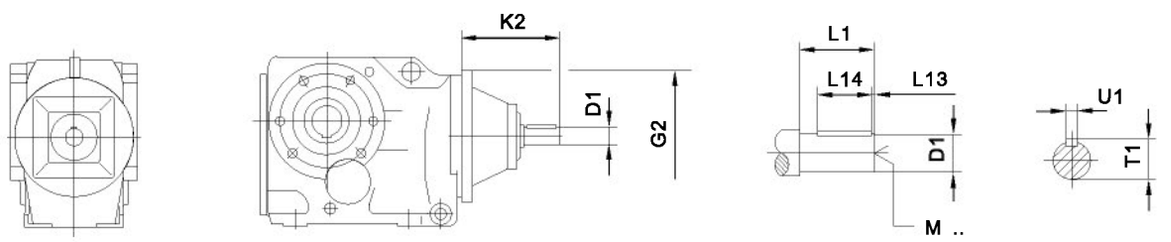

Wielkość *(size)*		G2	K2	D1	L1	L13	L14	T1	U1	M
MDK..37	AD1	120	102	16 k6	40	4	32	18	5	M5
	AD2		130	19 k6	40	4	32	21.5	6	M6
MDK..47 MDK..57 MDK..67	AD2	160	123	19 k6	40	4	32	21.5	6	M6
	AD3		159	24 k6	50	5	40	27	8	M8
MDK..77	AD2	200	116	19 k6	40	4	32	21.5	6	M6
	AD3		151	24 k6	50	5	40	27	8	M8
	AD4		224	38 k6	80	5	70	41	10	M12
MDK..87	AD2	250	111	19 k6	40	4	32	21.5	6	M6
	AD3		156	28 k6	60	5	50	31	8	M10
	AD4		219	38 k6	80	5	70	41	10	M12
	AD5		292	42 k6	110	10	70	45	12	M16
MDK..97	AD3	300	151	28 k6	60	5	50	31	8	M10
	AD4		214	38 k6	80	5	70	41	10	M12
	AD5		287	42 k6	110	10	70	45	12	M16
	AD6		327	48 k6	110	10	80	51.5	14	M16
MDK..107	AD3	350	145	28 k6	60	5	50	31	8	M10
	AD4		208	38 k6	80	5	70	41	10	M12
	AD5		281	42 k6	110	10	70	45	12	M16
	AD6		321	48 k6	110	10	80	51.5	14	M16
MDK..127	AD4	450	193	38 k6	80	5	70	41	10	M12
	AD5		266	42 k6	110	10	70	45	12	M16
	AD6		306	48 k6	110	10	80	51.5	14	M16
	AD7		300	55 m6	110	10	90	59	16	M20
	AD8		383	70 m6	140	15	110	74.5	20	M20
MDK..157 MDK..167 MDK..187	AD5	550	258	42 k6	110	10	70	45	12	M16
	AD6		298	48 k6	110	10	80	51.5	14	M16
	AD7		292	55 m6	110	10	90	59	16	M20
	AD8		374	70 m6	140	15	110	74.5	20	M20

MDK..AM..

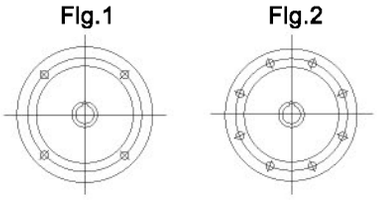

wersja kołnierzowa
flange form

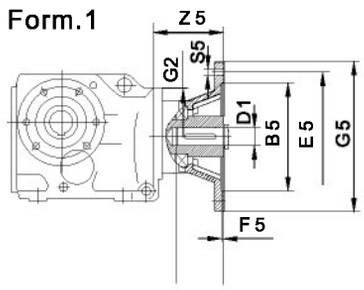

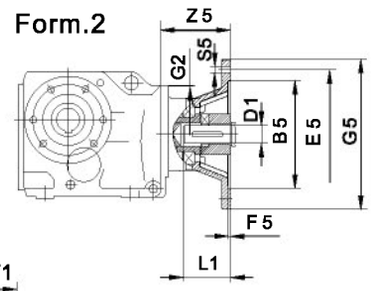

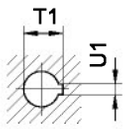

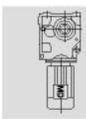

Wielkość *size*	IEC B5	Flg	Form	B5	E5	F5	G2	G5	S5	Z5	D1	L1	T1	U1
MDK..37	AM63	1	1	95G7	115	4.5	120	140	M8	72	11F7	23	12.8	4
	AM71[1)]			110G7	130			160		92.5	14F7	30	16.3	5
	AM80[1)]			130G7	165			200	M10	118	19F7	40	21.8	6
	AM90[1)]										24F7	50	27.3	8
MDK..47 MDK..57 MDK..67	AM63	1	1	95G7	115	4.5	160	140	M8	66	11F7	23	12.8	4
	AM71			110G7	130			160		87	14F7	30	16.3	5
	AM80			130G7	165			200	M10	113	19F7	40	21.8	6
	AM90										24F7	50	27.3	8
	AM100[1)]		2	180G7	215	5		250	M12	144	28H7	60	31.3	8
	AM112[1)]													
	AM132			230G7	265			300		177	38H7	80	41.3	10
MDK..77	AM63[1)]	1	1	95G7	115	4.5	200	140	M8	60	11F7	23	12.8	4
	AM71			110G7	130			160		79	14F7	30	16.3	5
	AM80			130G7	165			200	M10	105	19F7	40	21.8	6
	AM90										24F7	50	27.3	8
	AM100[1)]		2	180G7	215	5		250	M12	136	28H7	60	31.3	8
	AM112[1)]													
	AM132S[1)]			230G7	265			300		196	38H7	80	41.3	10
	AM132M[1)]													
	AM132ML[1)]													
MDK..87	AM80	1	1	130G7	165	4.5	250	200	M10	100	19F7	40	21.8	6
	AM90										24F7	50	27.3	8
	AM100		2	180G7	215	5		250	M12	131	28H7	60	31.3	8
	AM112													
	AM132S			230G7	265			300		191	38H7	80	41.3	10
	AM132M													
	AM132ML													
	AM160[1)]			250G7	300	6		350	M16	236	42H7	110	45.3	12
	AM180[1)]										48H7		51.8	14
MDK..97	AM100	1	2	180G7	215	5	300	250	M12	126	28H7	60	31.3	8
	AM112													
	AM132S			230G7	265			300		186	38H7	80	41.3	10
	AM132M													
	AM132ML													
	AM160			250G7	300	6		350	M16	231	42H7	110	45.3	12
	AM180										48H7		51.8	14
	AM200		1	300G7	350	7		400		268	55F7		59.3	16
	AM225[1)]	2	2	350G7	400	6		450		303	60H7	140	64.4	18

1) Obrys zewnętrzny kołnierza może wystawać poza płaszczyznę montażu łap (porównać średnicę kołnierza ze wzniosem wału).
Dimension G5/2 may protrude past foot mounting surface if mounted on a foot-mounted gear unit, please check.

MDK..AM..

Flg.1

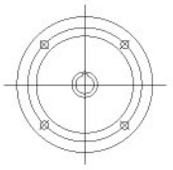

Flg.2

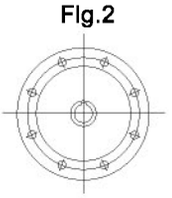

wersja kołnierzowa
flange form

Form.1

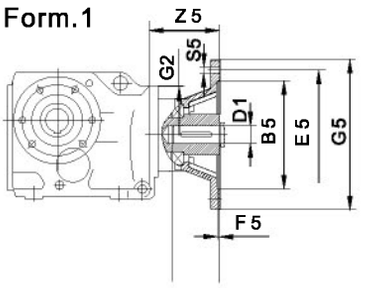

Form.2

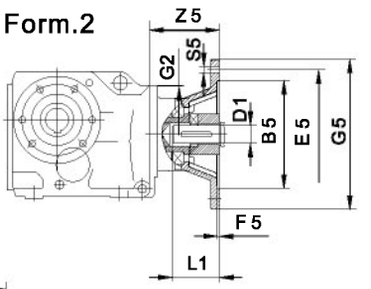

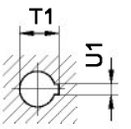

Wielkość size	IEC B5	Flg	Form	B5	E5	F5	G2	G5	S5	Z5	D1	L1	T1	U1
MDK..107	AM100	1	2	180G7	215	5	350	250	M12	120	28H7	60	31.3	8
	AM112													
	AM132S			230G7	265			300		180	38H7	80	41.3	10
	AM132M													
	AM132ML													
	AM160			250G7	300	6		350	M16	225	42H7	110	45.3	12
	AM180										48H7		51.8	14
	AM200		1	300G7	350	7		400		262	55F7		59.3	16
	AM225	2	2	350G7	400	6		450		297	60H7	140	64.4	18
MDK..127	AM132S	1	2	230G7	265	5	450	300	M12	165	38H7	80	41.3	10
	AM132M													
	AM132ML													
	AM160			250G7	300	6		350	M16	210	42H7	110	45.3	12
	AM180										48H7		51.8	14
	AM200		1	300G7	350	7		400		247	55F7.		59.3	16
	AM225	2	2	350G7	400	6		450		282	60H7	140	64.4	18
	AM250			450G7	500	7		550		336	65H7		69.4	
	AM280										75H7		79.9	20
MDK..157 MDK..167 MDK..187	AM132	1	2	230G7	265	5	550	300	M12	165	38H7	80	41.3	10
	AM160			250G7	300	6		350	M16	202	42H7	110	45.3	12
	AM180										48H7		51.8	14
	AM200		1	300G7	350	7		400		239	55F7		59.3	16
	AM225	2	2	350G7	400	6		450		274	60H7	140	64.4	18
	AM250			450G7	500	7		550		328	65H7		69.4	
	AM280										75H7		79.9	20

MDK..R..

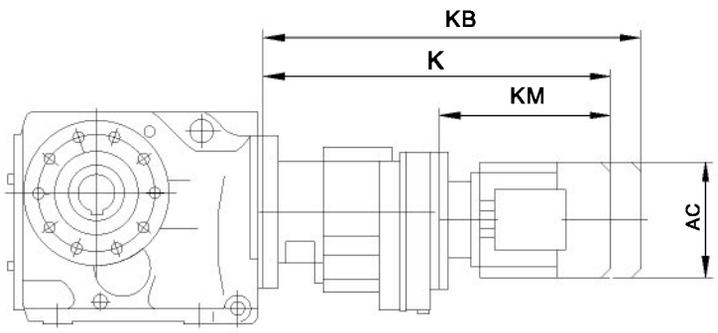

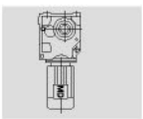

Wielkość *(size)*	Wielk. silnika *motor size*	AC	K	KM
MDK..37R17	DS63..	120	373	198
	DS71..	135	404	229
	DS80.	156	444	269
MDK..47R37 MDK..57R37	DS63..	120	363	198
	DS71..	135	394	229
	DS80..	156	434	269
MDK..67R37	DS63..	120	363	198
	DS71..	135	394	229
	DS80..	156	434	269
	DS90..	175	456	291
MDK..77R37	DS63..	120	355	198
	DS71..	135	386	229
	DS80..	156	426	269
	DS90..	175	448	291
MDK..87R57	DS63..	120	408	192
	DS71..	135	438	222
	DS80..	156	478	262
	DS90..	175	500	284
	DS100M	189	560	344
MDK..97R57	DS63..	120	403	192
	DS71..	135	433	222
	DS80..	156	473	262
	DS90..	175	495	284
	DS100M	189	555	344
	DS112M	221	603	392
MDK..107R77	DS63..	120	433	186
	DS71..	135	462	215
	DS80..	156	502	255
	DS90..	175	524	277

Wielkość *(size)*	Wielk. silnika *motor size*	AC	K	KM
MDK..107R77	DS100M	189	584	337
	DS112M	221	628	383
	DS132S	221	628	383
	DS132M	221	678	433
	DS160..	271	718	471
MDK..127R87	DS80..	156	530	250
	DS90..	175	552	272
	DS100M	189	612	332
	DS112M	221	656	378
	DS132S	221	656	378
	DS132M	221	706	428
	DS160..	271	746	466
MDK..157R97 MDK..167R97 MDKH..167R97 MDK..187R97 MDKH..187R97	DS90..	175	592	175
	DS100M	189	652	189
	DS112M	221	696	221
	DS132S	221	696	221
	DS132M	221	746	221
	DS160..	271	786	271
	DS180M	380	937	380
	DS180L	420	985	420
MDK..157R107 MDK..167R107 MDKH..167R107 MDK..187R107 MDKH..187R107	DS90L	175	643	261
	DS100M	189	703	321
	DS112M	221	747	367
	DS132S	221	747	367
	DS132M	221	797	417
	DS160..	271	837	455
	DS180M	380	988	606
	DS180L	420	1036	654
	DS200L	470	1042	660

Uwaga: Wymiary silnika podane w tabeli są tylko orientacyjne i zależą od dokładnego typu silnika.
Please note that the dimension of motor in the above table is only for reference. If you have special requirements, please contact us.

Notatki / *notes*

8. **Seria MDS** - przekładnie walcowo-ślimakowe
*8. **MDS series** - helical-worm gearmotors*

8.1. Wersje przekładni
8.1. Versions of gearmotors

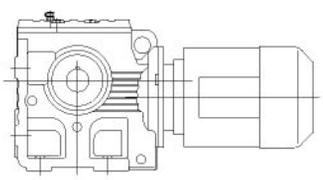
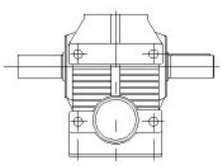

MDS..D..

Wał wyjściowy z wpustem, montaż łapowy
Output shaft with key, foot-mounted

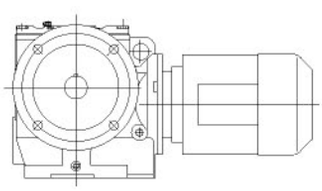
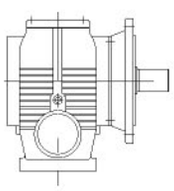

MDSF..D..

Wał wyjściowy z wpustem, kołnierz B5
Output shaft with key, B5 flange-mounted

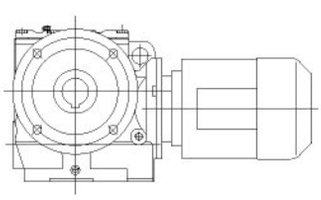
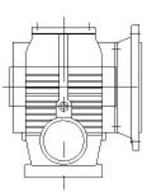

MDSAF..D..

Wał drążony z rowkiem wpustowym, kołnierz B5
Hollow shaft with key, B5 flange-mounted

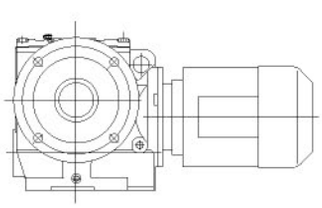
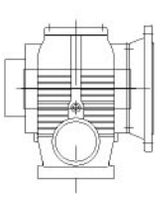

MDSHF..D..

Wał drążony z pierścieniem zaciskowym, kołnierz B5
Hollow shaft with shrink disk, B5 flange-mounted

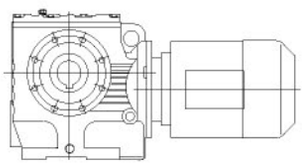
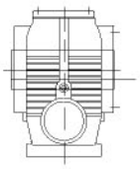

MDSA..D..

Wał drążony z rowkiem wpustowym
Hollow shaft with key

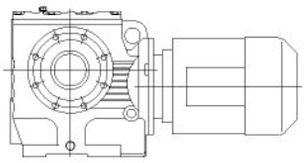
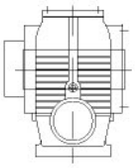

MDSH..D..

Wał drążony z pierścieniem zaciskowym
Hollow shaft with shrink disk

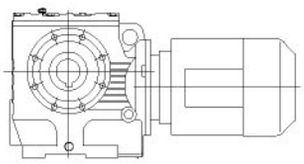
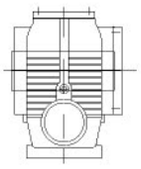

MDSAZ..D..

Wał drążony z rowkiem wpustowym, kołnierz B14
Hollow shaft with key, B14 flange-mounted

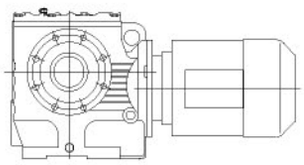
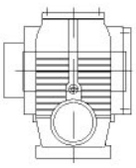

MDSHZ..D..

Wał drążony z pierścieniem zaciskowym, kołnierz B14
Hollow shaft with shrink disk, B14 flange-mounted

8.2. Kombinacje
8.2. Type of combination

Możliwe kombinacje wielkości przełożenia i silnika.
A combination table in each ratio range between gearbox and electric motor.

Wielk. przekładni *Gear unit size*	II. stopni *Stages*	D63 D71	D80	D90	D100	D112	D132S	D132M
MDS/SF/SA/SAF37	2	6.80-18.24 19.89-51.30 55.93-157.43	6.80-15.53 19.13 22.50-43.68 53.83 63.33-122.94	6.80-13.39 19.13 22.50-37.66 53.83 63.33-106.00				
MDS/SF/SA/SAF47	2	7.28-17.62 20.33-54.59 63.80-201.00	7.28-17.62 20.33-54.59 67.20 71.75-158.12	7.28-19.54 23.20-47.32 56.61 67.20 71.75-137.05	7.28-14.24 19.54 23.20-38.23 56.61 67.20 71.75-110.73			
MDS/SF/SA/SAF57	2	7.28-17.62 20.33-54.59 63.80-201.00	7.28-17.62 20.33-54.59 67.20 71.75-158.12	7.28-19.54 23.20-47.32 56.61 67.20 71.75-137.05	7.28-14.24 19.54 23.20-38.23 56.61 67.20 71.75-110.73			
MDS/SF/SA/SAF67	2	11.03-17.28 20.37-23.22 24.44 29.63-54.70 62.35-65.63 75.06 85.83-217.41	8.69-17.28 20.37-23.22 24.44-54.70 62.35-65.63 75.06 85.83-217.41	7.56-17.28 20.37-23.22 24.44-54.70 62.35-65.63 78.00-190.1	7.56-17.28 20.37 23.33 26.93-54.70 67.57 78.00-158.45	7.56-20.30 23.33 26.93-46.40 58.80 67.57 78.00-134.40	7.56-13.73 20.30 23.33 26.93-36.85 58.80 67.57 78.00-106.75	7.56-13.73 20.30 23.33 26.93-36.85 58.80 67.57 78.00-106.75
MDS/SF/SA/SAF77	2	15.28-18.42 20.99 22.89 35.94-53.87 63.03 71.33-75.09 107.83-256.47	12.07-18.42 20.99 22.89 28.41-53.87 63.03 71.33-75.09 85.22-256.47	8.06-18.42 20.99 22.89-75.09 85.22-225.26	8.06-18.42 20.99 22.89-66.67 75.20-189.09	8.06-18.42 20.99 22.89-56.92 66.67 75.20-161.60	8.06-18.97 22.22 25.07-43.33 56.92 66.67 75.20-130.00	8.06-18.97 22.22 25.07-43.33 56.92 66.67 75.20-130.00
MDS/SF/SA/SAF87	2		17.49-19.70 21.43 25.50 39.10-57.00 64.27-70.43 81.76 91.20 123.48-288.00	12.21-19.70 21.43 25.50-57.00 64.27-70.43 81.76-288.00	9.07-19.70 21.43 25.50-57.00 64.27-86.15 99.26-258.18	9.07-19.70 21.43 25.50-57.00 64.27-77.14 86.15 99.26-222.40	7.88-19.70 21.43 25.50-64.00 77.14 86.15 99.26-180.00	7.88-19.70 21.43 25.50-64.00 77.14 86.15 99.26-180.00
MDS/SF/SA/SAF97	2		23.59 26.39 49.87-60.59 71.43 80.85 161.74-286.40	17.05-23.59 26.39 36.05-60.59 71.43 80.85 116.92-286.40	13.07-23.859 26.39 32.60-60.59 71.43 80.85-286.40	13.07-23.59 26.39 32.60-60.59 71.43 80.85-286.40	8.26-23.59 26.39 32.60-78.26 89.60-231.67	8.26-23.59 26.39 32.60-78.26 89.60-231.67

Wielk. przekładni *Gear unit size*	II. stopni *Stages*	D160S	D160M	D160L	D180			
MDS/SF/SA/SAF77	2	8.06-13.76 18.97 22.22 25.07-32.38 56.92 66.67 75.20-97.14	8.06-13.76 18.97 22.22 25.07-32.38 56.92 66.67 75.20-97.14					
MDS/SF/SA/SAF87	2	7.88-20.27 24.43 27.28-44.03 64.00 77.14 86.15 99.26-139.05	7.88-20.27 24.43 27.28-44.03 64.00 77.14 86.15 99.26-139.05	7.88-20.27 24.43 27.28-44.03 64.00 77.14 86.15 99.26-139.05	7.88-15.64 20.27 24.43 27.28-34.96 64.00 77.14 86.15 99.26-110.40			
MDS/SF/SA/SAF97	2	8.26-23.59 26.39 32.60-55.79 65.45 78.26 89.60-180.95	8.26-23.59 26.39 32.60-55.79 65.45 78.26 89.60-180.95	8.26-23.59 26.39 32.60-55.79 65.45 78.26 89.60-180.95	8.26-21.23 24.13 27.63-44.89 65.45 78.26 89.60-145.60			

8.3. Przełożenia i momenty maksymalne

8.3. Ratio and max torque

MDS37-57 n_e=1400 1/min

MDS37			90Nm	
i	n_a [1/min]	M_{amax} [Nm]	F_{Ra} [N]	AD
157.43	8.9	92	3000	
144.40	9.7	92	3000	
122.94	11	91	3000	
106.00	13	88	3000	
98.80	14	87	3000	AD_1
86.36	16	86	3000	
80.96	17	85	3000	
71.44	20	84	3000	
63.33	22	82	3000	
55.93	25	81	3000	
53.83	26	80	3000	AD_2
51.30	27	81	3000	
43.68	32	81	3000	
37.66	37	79	3000	
35.10	40	78	3000	
30.68	46	76	2870	AD_1
28.76	49	75	2800	
25.38	55	74	2660	
22.50	62	73	2530	
19.89	70	52	2470	
19.13	73	71	2380	AD_2
18.24	77	52	2380	AD_1
15.53	90	50	2240	
13.39	105	49	2110	
12.48	112	48	2060	
10.91	128	48	1940	
10.23	137	47	1900	AD_2
9.02	155	46	1810	
8.00	175	45	1730	
6.80	206	43	1630	

MDS47			170Nm	
i	n_a [1/min]	M_{amax} [Nm]	F_{Ra} [N]	AD
201.00	7.0	170	5340	
184.80	7.6	170	5340	
158.12	8.9	170	5340	
137.05	10	168	5350	
128.10	11	168	5350	
110.73	13	168	5350	AD_1
94.08	15	168	5350	
84.00	17	167	5360	
71.75	20	167	5360	
69.39	20	155	5370	
67.20	21	167	5360	
63.80	22	155	5370	
56.61	25	165	5320	AD_2
54.59	26	155	5150	
47.32	30	155	4850	AD_1
44.22	32	155	4710	
38.23	37	155	4430	
32.48	43	155	4120	
29.00	48	155	3920	
24.77	57	155	3650	
23.20	60	152	3570	
20.33	69	110	3370	
19.54	72	144	3370	AD_2
17.62	79	110	3160	
16.47	85	110	3060	
14.24	98	110	2850	
12.10	116	109	2650	
10.80	130	109	2500	
9.23	152	109	2310	
8.64	162	109	2230	
7.28	192	103	2110	

MDS57			300Nm	
i	n_a [1/min]	M_{amax} [Nm]	F_{Ra} [N]	AD
201.00	7.0	295	7130	
184.80	7.6	295	7130	
158.12	8.9	295	7130	
137.05	10	295	7130	AD_1
128.10	11	295	7130	
110.73	13	295	7130	
94.08	15	295	7130	
84.00	17	295	7130	
71.75	20	290	7170	
69.39	20	245	7520	
67.20	21	285	7220	
63.80	22	245	7520	
56.61	25	265	7370	
54.59	26	245	7520	
47.32	30	245	7520	
44.22	32	245	7520	
38.23	37	245	7320	
32.48	43	245	6840	
29.00	48	245	6520	AD_2
24.77	57	245	6100	
23.20	60	245	5930	
20.33	69	168	5690	
19.54	72	215	5720	
17.62	79	168	5350	
16.47	85	168	5200	
14.24	98	169	4860	
12.10	116	169	4520	
10.80	130	169	4290	
9.23	152	169	3990	
8.64	162	166	3900	
7.28	192	146	3790	

MDS67-87 n_e=1400 1/min

MDS67			520Nm	
i	n_a [1/min]	M_{amax} [Nm]	F_{Ra} [N]	AD
217.41	6.4	520	8680	
190.11	7.4	520	8680	
180.60	7.8	520	8680	
158.45	8.8	520	8680	
134.40	10	520	8680	
121.33	12	520	8680	AD_2
106.75	13	520	8680	
100.80	14	520	8680	
85.83	16	520	8680	
78.00	18	520	8680	
75.06	19	480	9020	
67.57	21	520	8680	
65.63	21	480	9020	
62.35	22	480	9020	
58.80	24	500	8850	AD_3
54.70	26	480	8670	
46.40	30	480	8060	
41.89	33	480	7690	
36.85	38	480	7250	
34.80	40	480	7060	
29.63	47	480	6540	AD_2
26.93	52	480	6240	
24.44	57	340	6040	
23.33	60	480	5810	
23.22	60	340	5890	
20.37	69	340	5520	
20.30	69	425	5760	AD_3
17.28	81	340	5080	
15.60	90	340	4820	AD_2
13.73	102	340	4510	
12.96	108	340	4310	
11.03	127	340	3660	
10.03	140	340	3290	AD_3
8.69	161	335	2860	
7.56	185	295	3220	

MDS77			1270Nm	
i	n_a [1/min]	M_{amax} [Nm]	F_{Ra} [N]	AD
256.47	5.5	1270	11800	
225.26	6.2	1270	11800	
214.00	6.5	1270	11800	
189.09	7.4	1270	11800	
161.60	8.7	1260	11900	
148.15	9.4	1240	12000	
130.00	11	1210	12300	
123.20	11	1200	12400	
107.83	13	1170	12600	
97.14	14	1140	12900	AD_2
85.22	16	1100	13200	
75.20	19	1070	13400	
75.09	19	1100	13200	
71.33	20	1100	13200	
66.67	21	1040	13600	
63.03	22	1100	12800	
56.92	25	990	13300	
53.87	26	1100	11900	
49.38	28	1100	11500	
43.33	32	1100	10800	
41.07	34	1100	10500	
35.94	39	1100	9850	
32.38	43	1090	9400	
28.41	49	1050	8970	
25.07	56	1020	8550	
22.89	61	705	7440	
22.22	63	980	8220	
20.99	67	705	6820	AD_3
18.97	74	930	7800	
18.42	76	705	5920	
17.45	80	710	5470	
15.28	92	710	4610	
13.76	102	710	3960	
12.07	116	720	3000	
10.65	131	720	2280	
9.44	148	725	1040	AD_4
8.06	174	680	1160	

MDS87			2280Nm	
i	n_a [1/min]	M_{amax} [Nm]	F_{Ra} [N]	AD
288.00	4.9	2280	27900	
258.18	5.4	2280	27900	
222.40	6.3	2280	27900	
202.96	6.9	2260	28000	
180.00	7.8	2210	28100	
151.30	9.3	2150	28200	
139.05	10	2100	28300	
123.48	11	2060	28300	AD_2
110.40	13	2000	28400	
99.26	14	1960	28500	
91.20	15	1510	29100	
86.15	16	1880	28600	
81.76	17	1600	29000	
77.14	18	1820	28700	
70.43	20	1600	29000	
64.27	22	1600	29000	
64.00	22	1700	28900	AD_3
57.00	25	1600	29000	AD_2
47.91	29	1600	29000	
44.03	32	1600	29000	
39.10	36	1600	28200	AD_3
34.96	40	1600	27100	
31.43	45	1600	26000	
27.28	51	1600	24700	
25.50	55	1240	23400	
24.43	57	1600	23700	
21.43	65	1240	21800	
20.27	69	1600	22100	
19.70	71	1240	21100	
17.49	80	1240	20200	
15.64	90	1240	19300	AD_4
14.06	100	1240	18500	
12.21	115	1240	17400	
10.93	128	1240	16600	
9.07	154	1140	15900	
7.88	178	1010	15700	

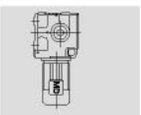

MDS97, MDS37/47R17 n_e=1400 1/min

MDS97 4000Nm

i	n_a [1/min]	M_{amax} [Nm]	F_{Ra} [N]	AD
286.40	4.9	4000	36300	
262.22	5.3	4000	36300	
231.67	6.0	4000	36300	
196.52	7.1	4000	36300	
180.95	7.7	3920	36500	
161.74	8.7	3840	36600	AD_3
145.60	9.6	3730	36800	
131.85	11	3650	37000	
116.92	12	3510	37200	
105.71	13	3440	37300	
89.60	16	3240	37600	
80.85	17	3230	37600	
78.26	18	3080	37900	
71.43	20	3300	37500	AD_4
65.45	21	2900	38100	AD_3
60.59	23	3300	37500	
55.79	25	3300	37100	
49.87	28	3300	35600	
44.89	31	3300	34100	AD_4
40.65	34	3300	32800	
36.05	39	3300	31300	
32.60	43	3200	30400	
27.63	51	3010	29000	AD_5
26.39	53	2600	26100	AD_4
24.13	58	2870	28000	
23.59	59	2600	24900	
21.23	66	2600	23700	
19.23	73	2600	22700	
17.05	82	2570	21100	AD_5
15.42	91	2470	20800	
13.07	107	2330	20100	
11.41	123	2210	19500	
9.55	147	2040	18800	
8.26	169	1770	18800	

MDS37R17 90Nm

i	n_a [1/min]	Stopień *Stage* S37	R17	M_{amax} [Nm]	F_{Ra} [N]
10037	0.14	2	3	92	3000
8654	0.16	2	3	92	3000
8066	0.17	2	3	92	3000
7051	0.20	2	3	92	3000
6079	0.23	2	3	92	3000
5431	0.26	2	3	92	3000
4747	0.29	2	3	92	3000
4155	0.34	2	3	92	3000
3632	0.39	2	3	92	3000
2866	0.49	2	3	92	3000
2471	0.57	2	3	92	3000
2160	0.65	2	3	92	3000
1887	0.74	2	3	92	3000
1665	0.84	2	3	92	3000
1456	0.96	2	3	92	3000
1271	1.1	2	3	92	3000
1121	1.2	2	3	92	3000
994	1.4	2	3	92	3000
869	1.6	2	3	92	3000
774	1.8	2	2	92	3000
666	2.1	2	2	92	3000
596	2.3	2	2	92	3000
521	2.7	2	2	92	3000
456	3.1	2	2	92	3000
398	3.5	2	2	92	3000
351	4.0	2	2	92	3000
303	4.6	2	2	92	3000
265	5.3	2	2	92	3000
232	6.0	2	2	92	3000
202	6.9	2	2	92	3000
179	7.8	2	2	92	3000
158	8.9	2	2	92	3000
144	9.7	2	2	92	3000
118	12	2	2	92	3000
110	13	2	2	92	3000

MDS47R17 185Nm

i	n_a [1/min]	Stopień *Stage* S47	R17	M_{amax} [Nm]	F_{Ra} [N]
12909	0.11	2	3	185	5250
11189	0.13	2	3	185	5250
10374	0.13	2	3	185	5250
8992	0.16	2	3	185	5250
7860	0.18	2	3	185	5250
6887	0.20	2	3	185	5250
6055	0.23	2	3	185	5250
5259	0.26	2	3	185	5250
4637	0.30	2	3	185	5250
4092	0.34	2	3	185	5250
3582	0.39	2	3	185	5200
3131	0.45	2	3	185	5200
2714	0.52	2	3	185	5200
2412	0.58	2	3	185	5200
2131	0.66	2	3	185	5200
1863	0.75	2	3	185	5200
1663	0.84	2	3	185	5200
1435	0.98	2	3	185	5200
1254	1.1	2	3	185	5200
1120	1.2	2	3	185	5200
1083	1.3	2	3	185	5200
965	1.5	2	3	185	5200
956	1.5	2	3	185	5210
865	1.6	2	2	185	5200
750	1.9	2	2	185	5200
655	2.1	2	2	185	5200
574	2.4	2	2	185	5200
506	2.8	2	2	185	5200
438	3.2	2	2	185	5200
388	3.6	2	2	185	5200
336	4.2	2	2	185	5200
294	4.8	2	2	185	5200
257	5.4	2	2	185	5260
229	6.1	2	2	185	5200
200	7.0	2	2	185	5200
187	7.5	2	2	185	5200
165	8.5	2	2	185	5200
148	9.5	2	2	185	5200
131	11	2	2	185	5200

MDS57R17, MDS67/77R37 n_e=1400 1/min

MDS57R17				300Nm	
i	n_a [1/min]	Stopień *Stage* S57	R17	M_{amax} [Nm]	F_{Ra} [N]
12909	0.11	2	3	330	6800
11189	0.13	2	3	330	6800
10374	0.13	2	3	330	6800
8992	0.16	2	3	330	6800
7860	0.18	2	3	330	6800
6887	0.20	2	3	330	6800
6055	0.23	2	3	330	6800
5292	0.26	2	3	330	6800
4637	0.30	2	3	330	6800
4092	0.34	2	3	330	6800
3628	0.39	2	3	330	6800
3131	0.45	2	3	300	7090
2714	0.52	2	3	300	7090
2412	0.58	2	3	300	7090
2131	0.66	2	3	300	7090
1863	0.75	2	3	300	7090
1663	0.84	2	3	300	7090
1435	0.98	2	3	300	7090
1254	1.1	2	3	300	7090
1083	1.3	2	3	300	7090
965	1.5	2	2	300	7090
865	1.6	2	2	300	7090
750	1.9	2	2	300	7090
655	2.1	2	2	300	7090
574	2.4	2	2	300	7090
506	2.8	2	2	300	7090
438	3.2	2	2	300	7090
388	3.6	2	2	300	7090
336	4.2	2	2	300	7090
294	4.8	2	2	300	7090
269	5.2	2	2	300	7090
229	6.1	2	2	300	7090
204	6.9	2	2	300	7090
187	7.5	2	2	300	7090
165	8.5	2	2	300	7090
131	11	2	2	300	7090

MDS67R37				570Nm	
i	n_a [1/min]	Stopień *Stage* S67	R37	M_{amax} [Nm]	F_{Ra} [N]
21362	0.07	2	3	570	8190
19594	0.07	2	3	570	8190
18120	0.08	2	3	570	8190
16682	0.08	2	3	570	8190
14383	0.10	2	3	570	8190
12774	0.11	2	3	570	8190
11013	0.13	2	3	570	8190
9694	0.14	2	3	570	8190
8529	0.16	2	3	570	8190
7455	0.19	2	3	570	8190
6531	0.21	2	3	570	8190
5759	0.24	2	3	570	8190
4965	0.28	2	3	570	8190
4410	0.32	2	3	570	8190
3880	0.36	2	3	570	8190
3432	0.41	2	3	570	8190
2944	0.48	2	3	570	8190
2630	0.53	2	3	570	8190
2279	0.61	2	3	570	8190
2014	0.70	2	3	570	8190
1772	0.79	2	3	570	8190
1559	0.90	2	3	570	8190
1363	1.0	2	3	570	8190
1194	1.2	2	3	570	8190
1045	1.3	2	3	570	8190
914	1.5	2	3	570	8190
809	1.7	2	2	570	8190
712	2.0	2	2	570	8190
615	2.3	2	2	570	8190
543	2.6	2	2	570	8190
469	3.0	2	2	570	8190
424	3.3	2	2	570	8190
365	3.8	2	2	570	8190
319	4.4	2	2	570	8190
281	5.0	2	2	570	8190
246	5.7	2	2	570	8190
221	6.3	2	2	570	8190
198	7.1	2	2	570	8190
168	8.3	2	2	570	8190
156	9.0	2	2	570	8190

MDS77R37				1270Nm	
i	n_a [1/min]	Stopień *Stage* S77	R37	M_{amax} [Nm]	F_{Ra} [N]
25493	0.05	2	3	1270	11700
21787	0.06	2	3	1270	11700
19907	0.07	2	3	1270	11700
17013	0.08	2	3	1270	11700
14668	0.10	2	3	1270	11700
13110	0.11	2	3	1270	11700
11569	0.12	2	3	1270	11700
9887	0.14	2	3	1270	11700
8817	0.16	2	3	1270	11700
7735	0.18	2	3	1270	11700
6735	0.21	2	3	1270	11700
5943	0.24	2	3	1270	11700
5214	0.27	2	3	1270	11700
4618	0.30	2	3	1270	11700
3992	0.35	2	3	1270	11700
3540	0.40	2	3	1270	11700
3098	0.45	2	3	1270	11700
2753	0.51	2	3	1240	12000
2374	0.59	2	3	1240	12000
2083	0.67	2	3	1240	12000
1813	0.77	2	3	1240	12000
1745	0.80	2	3	1240	12000
1600	0.88	2	3	1240	12000
1404	1.0	2	3	1240	12000
1245	1.1	2	3	1240	12000
1100	1.3	2	2	1240	12000
954	1.5	2	2	1240	12000
837	1.7	2	2	1240	12000
714	2.0	2	2	1240	12000
637	2.2	2	2	1240	12000
574	2.4	2	2	1240	12000
499	2.8	2	2	1240	12000
438	3.2	2	2	1240	12000
389	3.6	2	2	1240	12000
327	4.3	2	2	1240	12000
289	4.8	2	2	1240	12000
250	5.6	2	2	1240	12000
219	6.4	2	2	1240	12000

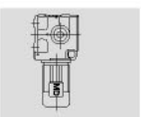

MDS87/97R57 n_e=1400 1/min

MDS87R57				2500Nm	
i	n_a [1/min]	Stopień *Stage* S87	R57	M_{amax} [Nm]	F_{Ra} [N]
25987	0.05	2	3	2500	27500
23940	0.06	2	3	2500	27500
20568	0.07	2	3	2500	27500
18265	0.08	2	3	2500	27500
16774	0.08	2	3	2500	27500
14820	0.09	2	3	2500	27500
13160	0.11	2	3	2500	27500
11200	0.12	2	3	2500	27500
9904	0.14	2	3	2500	27500
8549	0.16	2	3	2500	27500
7643	0.18	2	3	2500	27500
6706	0.21	2	3	2500	27500
5875	0.24	2	3	2500	27500
5187	0.27	2	3	2500	27500
4606	0.30	2	3	2500	27500
3872	0.36	2	3	2500	27500
3475	0.40	2	2	2500	27500
2905	0.48	2	2	2500	27500
2586	0.54	2	2	2500	27500
2335	0.60	2	2	2500	27500
2054	0.68	2	2	2500	27500
1824	0.77	2	2	2500	27500
1631	0.86	2	2	2500	27500
1332	1.1	2	2	2500	27500
1191	1.2	2	2	2500	27500
1032	1.4	2	2	2500	27500
930	1.5	2	2	2500	27500
831	1.7	2	2	2500	27500
719	1.9	2	2	2500	27500
624	2.2	2	2	2500	27500
558	2.5	2	2	2500	27500
485	2.9	2	2	2500	27500
435	3.2	2	2	2450	27600
378	3.7	2	2	2450	27600
323	4.3	2	2	2400	27700
281	5.0	2	2	2400	27700
255	5.5	2	2	1980	28400
222	6.3	2	2	1980	28400
205	6.8	2	2	1980	28400

MDS97R57				4200Nm	
i	n_a [1/min]	Stopień *Stage* S97	R57	M_{amax} [Nm]	F_{Ra} [N]
33818	0.04	2	3	4200	34200
31154	0.04	2	3	4200	34200
27847	0.05	2	3	4200	34200
24641	0.06	2	3	4200	34200
21537	0.07	2	3	4200	34200
18749	0.07	2	3	4200	34200
16233	0.09	2	3	4200	34200
14576	0.10	2	3	4200	34200
12752	0.11	2	3	4200	34200
11267	0.12	2	3	4200	34200
10078	0.14	2	3	4200	34200
8608	0.16	2	3	4200	34200
7554	0.19	2	3	4200	34200
6640	0.21	2	3	4200	30600
5780	0.24	2	3	4200	30600
4937	0.28	2	3	4200	30600
4444	0.32	2	3	4200	30600
4017	0.35	2	3	4200	30600
3453	0.41	2	3	4200	30600
3108	0.45	2	3	4200	30600
2654	0.53	2	3	4200	30600
2329	0.60	2	3	4200	30600
2081	0.67	2	3	4200	30600
1860	0.75	2	3	4200	30600
1574	0.89	2	3	4200	30600
1394	1.0	2	2	4200	30600
1223	1.1	2	2	4200	30600
1070	1.3	2	2	4200	30600
928	1.5	2	2	4200	30600
824	1.7	2	2	4200	30600
714	2.0	2	2	4200	34400
626	2.2	2	2	4200	30600
538	2.6	2	2	4200	30600
484	2.9	2	2	4200	30700
420	3.3	2	2	4200	30700
376	3.7	2	2	4200	30800
327	4.3	2	2	4200	30800
287	4.9	2	2	4200	30900
252	5.6	2	2	4200	31000
219	6.4	2	2	4200	31000
205	6.8	2	2	4200	31000

8.4. Tabele doboru motoreduktorów
8.4. Selection tables for gearmotors

Wyjaśnienie oznaczeń:
Description:

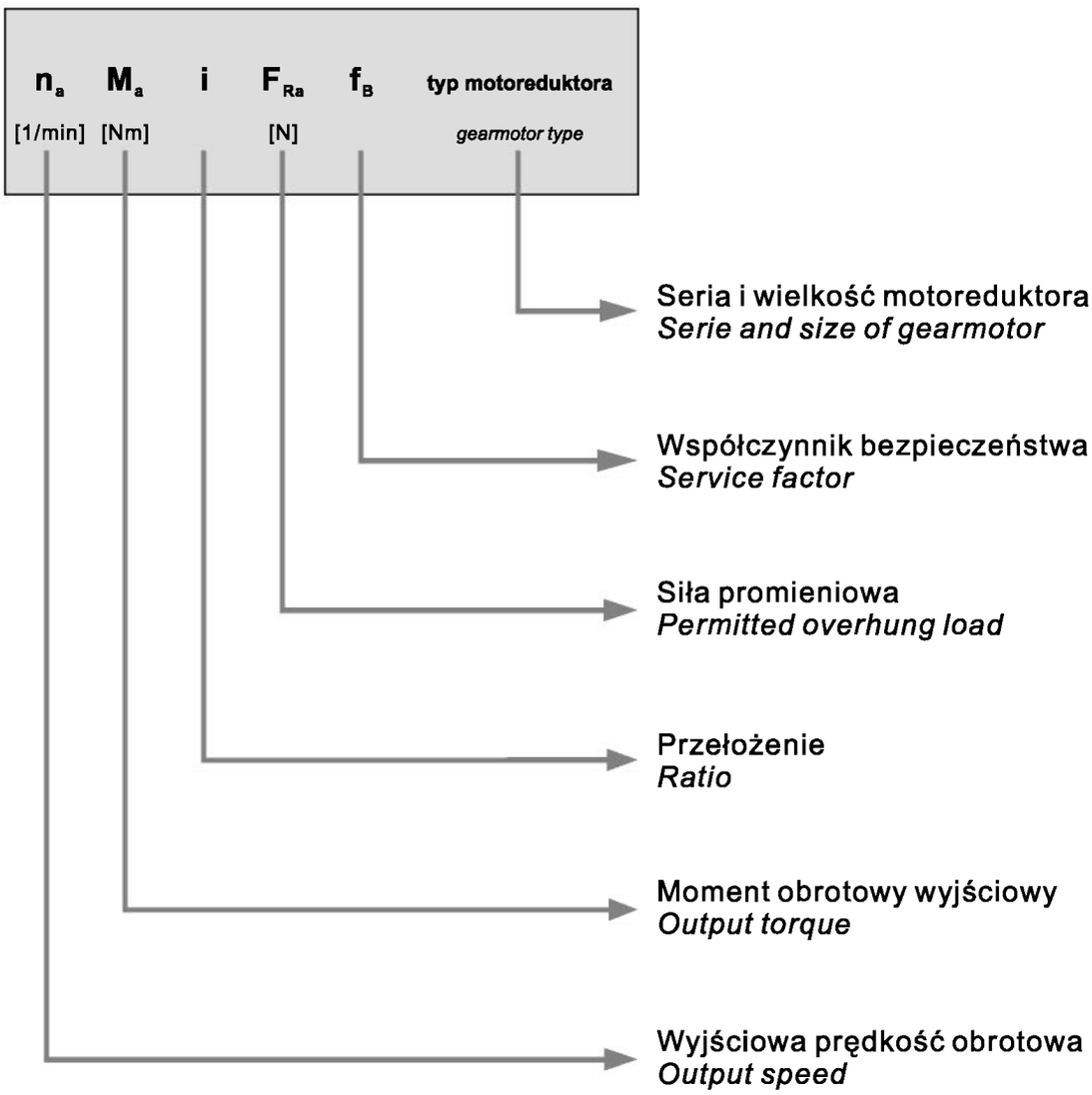

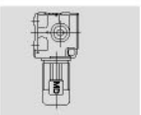

Tabele doboru motoreduktorów zawierają oznaczenia silników standardowych zintegrowanych. Każdy motoreduktor może być wyposażony w dowolny, inny silnik, również znormalizowany IEC.
Selection tables for gearmotors include descriptions of standard, integrated electric motors. Each gearmotor can be supplied with any other electric motor, including IEC standard.

n_a [1/min]	M_a [Nm]	i	F_{Ra} [N]	f_B	typ motoreduktora *gearmotor type*
0.12kW					
0.12	4610	11267	28700	0.90	MDS97R57DS63S4
0.14	4210	10078	32800	1.00	MDSF97R57DS63S4
0.16	3500	8608	34200	1.20	MDSA97R57DS63S4
0.18	3090	7554	34800	1.35	MDSAF97R57DS63S4
0.18	3120	7643	14400	0.80	
0.21	2630	6706	27200	0.95	MDS87R57DS63S4
0.23	2330	5875	27800	1.05	MDSF87R57DS63S4
0.27	1960	5187	28500	1.25	MDSA87R57DS63S4
0.30	1740	4606	28800	1.45	MDSAF87R57DS63S4
0.36	1450	3872	29200	1.70	
0.39	1340	3540	9700	0.95	
0.45	1170	3098	12500	1.10	
0.58	1280	2374	11600	0.95	MDS77R37DS63S4
0.66	1130	2083	12900	1.10	MDSF77R37DS63S4
0.76	960	1813	14100	1.30	MDSA77R37DS63S4
0.79	910	1745	14300	1.35	MDSAF77R37DS63S4
0.86	840	1600	14700	1.50	
0.98	735	1404	15200	1.70	
1.1	645	1245	15600	1.90	
1.0	665	1363	4800	0.85	MDS67R37DS63S4
1.2	575	1194	8160	1.00	MDSF67R37DS63S4
1.3	515	1045	8720	1.10	MDSA67R37DS63S4
1.5	445	914	9280	1.30	MDSAF67R37DS63S4
1.7	400	809	9580	1.40	
1.9	355	712	9860	1.60	
2.2	295	615	10100	1.95	MDS67R37DS63S4
2.5	265	543	10300	2.2	MDSF67R37DS63S4
2.9	220	469	10400	2.6	MDSA67R37DS63S4
3.3	197	424	10500	2.9	MDSAF67R37DS63S4
3.8	180	365	10500	3.2	
2.1	315	655	6930	0.95	
2.4	275	574	7290	1.10	
2.7	240	506	7540	1.25	MDS57R17DS63S4
3.2	210	438	7750	1.45	MDSF57R17DS63S4
3.6	183	388	7880	1.65	MDSA57R17DS63S4
4.1	163	336	7980	1.85	MDSAF57R17DS63S4
4.7	140	294	8070	2.1	
5.1	134	269	8090	2.2	
3.2	210	438	5060	0.90	
3.6	183	388	5210	1.00	
4.1	162	336	5320	1.15	MDS47R17DS63S4
4.7	139	294	5450	1.35	MDSF47R17DS63S4
5.4	95	257	5680	1.95	MDSA47R17DS63S4
6.0	113	229	5570	1.65	MDSAF47R17DS63S4
6.9	99	200	5630	1.90	
7.4	92	187	5660	2.0	
6.8	99	202	3000	0.95	
7.7	88	179	3000	1.05	MDS37R17DS63S4
8.7	78	158	3000	1.15	MDSF37R17DS63S4
9.6	72	144	3000	1.25	MDSA37R17DS63S4
12	59	118	3000	1.55	MDSAF37R17DS63S4
13	55	110	3000	1.65	

n_a [1/min]	M_a [Nm]	i	F_{Ra} [N]	f_B	typ motoreduktora *gearmotor type*
0.12kW					
4.5	143	201.00	8050	2.1	
4.9	133	184.80	8090	2.2	MDS57DS63M6
5.7	116	158.12	8150	2.5	MDSF57DS63M6
6.6	103	137.05	8180	2.9	MDSA57DS63M6
					MDSAF57DS63M6
4.5	138	201.00	5490	1.30	
4.9	129	184.80	5540	1.40	MDS47DS63M6
5.7	112	158.12	5610	1.55	MDSF47DS63M6
6.6	99	137.05	5660	1.75	MDSA47DS63M6
7.0	93	128.10	5680	1.85	MDSAF47DS63M6
6.9	95	201.00	5680	1.80	
7.5	89	184.80	5700	1.90	MDS47DS63S4
8.7	77	158.12	5740	2.2	MDSF47DS63S4
10	68	137.05	5780	2.5	MDSA47DS63S4
11	64	128.10	5790	2.6	MDSAF47DS63S4
12	57	110.73	5810	3.0	
5.7	107	157.43	3000	0.85	
6.2	99	144.40	3000	0.95	MDS37DS63M6
7.3	86	122.94	3000	1.05	MDSF37DS63M6
8.5	76	106.00	3000	1.20	MDSA37DS63M6
9.1	71	98.80	3000	1.30	MDSAF37DS63M6
10	64	86.36	3000	1.45	
8.8	74	157.43	3000	1.25	
9.6	68	144.40	3000	1.35	
11	60	122.94	3000	1.55	MDS37DS63S4
13	52	106.00	3000	1.70	MDSF37DS63S4
14	49	98.80	3000	1.75	MDSA37DS63S4
16	44	86.36	3000	1.95	MDSAF37DS63S4
17	41	80.96	3000	2.1	
19	37	71.44	3000	2.3	
22	33	63.33	3000	2.5	
25	35	55.93	3000	2.3	
27	33	51.30	3000	2.5	
32	28	43.68	3000	2.9	
37	25	37.66	3000	3.2	MDS37DS63S4
39	23	35.10	3000	3.4	MDSF37DS63S4
45	20	30.68	3000	3.7	MDSA37DS63S4
48	19	28.76	3000	3.9	MDSAF37DS63S4
54	17	25.38	3000	4.3	
61	15	22.50	3000	4.8	
69	14	19.89	3000	3.6	
76	13	18.24	3000	3.9	
89	11	15.53	2870	4.4	
0.18kW					
					MDS87R57DS63M4
0.29	2970	4606	20900	0.85	MDSF87R57DS63M4
0.34	2480	3872	27500	1.00	MDSA87R57DS63M4
					MDSAF87R57DS63M4

n_a [1/min]	M_a [Nm]	i	F_{Ra} [N]	f_B	typ motoreduktora *gearmotor type*
0.18kW					
0.38	2350	3475	27800	1.05	MDS87R57DS63M4 MDSF87R57DS63M4 MDSA87R57DS63M4 MDSAF87R57DS63M4
0.45	1970	2905	28500	1.25	
0.51	1710	2586	28900	1.45	
0.57	1520	2335	29100	1.65	
0.64	1320	2054	29400	1.90	
0.72	1170	1824	29500	2.1	
0.81	1050	1631	29600	2.4	
0.94	1220	1404	12200	1.00	MDS77R37DS63M4 MDSF77R37DS63M4 MDSA77R37DS63M4 MDSAF77R37DS63M4
1.1	1070	1245	13300	1.15	
1.2	990	1100	13900	1.25	MDS77R37DS63M4 MDSF77R37DS63M4 MDSA77R37DS63M4 MDSAF77R37DS63M4
1.4	850	954	14700	1.45	
1.6	745	837	15200	1.65	
1.9	625	714	15600	2.0	
2.1	555	637	15900	2.2	
2.3	500	574	16000	2.5	
1.6	660	809	5140	0.85	MDS67R37DS63M4 MDSF67R37DS63M4 MDSA67R37DS63M4 MDSAF67R37DS63M4
1.9	580	712	8060	1.00	
2.2	490	615	8920	1.15	
2.4	440	543	9330	1.30	
2.8	370	469	9780	1.55	
3.1	335	424	9970	1.70	
3.6	295	365	10100	1.90	
3.0	345	438	6630	0.85	MDS57R17DS63M4 MDSF57R17DS63M4 MDSA57R17DS63M4 MDSAF57R17DS63M4
3.4	305	388	7040	1.00	
3.9	270	336	7350	1.10	
4.5	235	294	7600	1.30	
4.9	220	269	7690	1.35	
5.8	188	229	7860	1.60	
6.5	169	204	7950	1.80	
7.1	154	187	8010	1.95	
4.5	230	294	4910	0.80	MDS47R17DS63M4 MDSF47R17DS63M4 MDSA47R17DS63M4 MDSAF47R17DS63M4
5.1	158	257	5400	1.15	
5.8	185	229	5200	1.00	
6.6	162	200	5330	1.15	
7.1	152	187	5380	1.20	
8.0	134	165	5470	1.40	
8.9	121	148	5530	1.55	
10	108	131	5590	1.70	
4.0	255	217.41	10300	2.2	MDS67DS63L6 MDSF67DS63L6 MDSA67DS63L6 MDSAF67DS63L6
4.6	225	190.11	10400	2.5	
4.8	215	180.60	10400	2.6	
4.3	220	201.00	7670	1.35	MDS57DS63L6 MDSF57DS63L6 MDSA57DS63L6 MDSAF57DS63L6
4.7	205	184.80	7760	1.45	
5.5	180	158.12	7900	1.65	
6.3	159	137.05	7990	1.85	
6.6	154	201.00	8010	1.90	MDS57DS63M4 MDSF57DS63M4 MDSA57DS63M4 MDSAF57DS63M4
7.1	143	184.80	8050	2.1	
8.4	125	158.12	8120	2.4	
9.6	110	137.05	8160	2.7	

n_a [1/min]	M_a [Nm]	i	F_{Ra} [N]	f_B	typ motoreduktora *gearmotor type*
0.18kW					
4.3	215	201.00	5090	0.85	MDS47DS63L6 MDSF47DS63L6 MDSA47DS63L6 MDSAF47DS63L6
4.7	199	184.80	5180	0.90	
5.5	173	158.12	5320	1.00	
6.3	153	137.05	5420	1.10	
6.8	144	128.10	5470	1.20	
6.6	149	201.00	5440	1.15	MDS47DS63M4 MDSF47DS63M4 MDSA47DS63M4 MDSAF47DS63M4
7.1	138	184.80	5490	1.25	
8.4	121	158.12	5570	1.40	
9.6	107	137.05	5630	1.60	
10	100	128.10	5660	1.65	
12	88	110.73	5700	1.90	
14	77	94.08	5750	2.2	
16	69	84.00	5770	2.4	
18	60	71.75	5800	2.8	
19	69	69.39	5750	2.2	
8.4	115	157.43	3000	0.80	MDS37DS63M4 MDSF37DS63M4 MDSA37DS63M4 MDSAF37DS63M4
9.1	107	144.40	3000	0.85	
11	93	122.94	3000	1.00	
12	82	106.00	3000	1.10	
13	77	98.80	3000	1.15	
15	68	86.36	3000	1.25	
16	64	80.96	3000	1.30	
18	58	71.44	3000	1.45	MDS37DS63M4 MDSF37DS63M4 MDSA37DS63M4 MDSAF37DS63M4
21	52	63.33	3000	1.60	
24	55	55.93	3000	1.45	
26	51	51.30	3000	1.60	
30	44	43.68	3000	1.85	
35	38	37.66	3000	2.1	
38	36	35.10	3000	2.2	
43	32	30.68	3000	2.4	
46	30	28.76	3000	2.5	
52	27	25.38	3000	2.8	
59	24	22.50	3000	3.0	
66	22	19.89	3000	2.3	
72	21	18.24	2940	2.5	
85	18	15.53	2810	2.8	
99	15	13.39	2700	3.2	
106	14	12.48	2650	3.4	
121	13	10.91	2550	3.8	
129	12	10.23	2500	4.0	
0.25kW					
0.45	2860	2905	24300	0.85	MDS87R57DS63L4 MDSF87R57DS63L4 MDSA87R57DS63L4 MDSAF87R57DS63L4
0.50	2500	2586	27500	1.00	
0.56	2240	2335	28000	1.10	
0.63	1950	2054	28500	1.30	
0.71	1730	1824	28900	1.45	
0.80	1550	1631	29100	1.60	
1.4	910	930	29800	2.8	

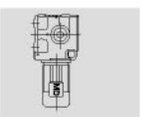

n_a [1/min]	M_a [Nm]	i	F_{Ra} [N]	f_B	typ motoreduktora *gearmotor type*
0.25kW					
1.4	1230	954	12100	1.00	
1.5	1080	837	13300	1.15	MDS77R37DS63L4
1.8	910	714	14400	1.35	MDSF77R37DS63L4
2.0	810	637	14900	1.55	MDSA77R37DS63L4
2.3	730	574	15200	1.70	MDSAF77R37DS63L4
2.6	625	499	15600	2.0	
2.4	635	543	7420	0.90	
2.8	540	469	8500	1.05	MDS67R37DS63L4
3.1	485	424	8970	1.15	MDSF67R37DS63L4
3.6	430	365	9390	1.30	MDSA67R37DS63L4
4.1	375	319	9750	1.50	MDSAF67R37DS63L4
4.6	330	281	9990	1.75	
4.4	340	294	6720	0.90	
4.8	315	269	6950	0.95	
5.7	270	229	7330	1.10	MDS57R17DS63L4
6.4	245	204	7530	1.25	MDSF57R17DS63L4
6.9	225	187	7660	1.35	MDSA57R17DS63L4
7.9	198	165	7810	1.50	MDSAF57R17DS63L4
9.9	159	131	7990	1.90	
3.1	435	217.41	9350	1.30	MDS67D80N8
3.6	390	190.11	9670	1.45	MDSF67D80N8
3.8	370	180.60	9770	1.50	MDSA67D80N8
4.3	330	158.45	9980	1.70	MDSAF67D80N8
4.1	350	217.41	9890	1.60	MDS67DS71S6
4.6	310	190.11	10100	1.80	MDSF67DS71S6
4.9	295	180.60	10100	1.90	MDSA67DS71S6
5.6	265	158.45	10300	2.1	MDSAF67DS71S6
6.0	245	217.41	10300	2.1	
6.8	220	190.11	10400	2.4	
7.2	210	180.60	10500	2.5	MDS67DS63L4
8.2	187	158.45	10500	2.8	MDSF67DS63L4
9.7	161	134.40	10600	3.2	MDSA67DS63L4
11	147	121.33	10600	3.5	MDSAF67DS63L4
12	131	106.75	10700	4.0	
4.4	305	201.00	7050	1.00	
4.8	285	184.80	7230	1.05	MDS57DS71S6
5.6	245	158.12	7510	1.20	MDSF57DS71S6
6.4	220	137.05	7690	1.35	MDSA57DS71S6
6.9	205	128.10	7760	1.45	MDSAF57DS71S6
6.5	215	201.00	7700	1.35	
7.0	200	184.80	7790	1.45	
8.2	176	158.12	7920	1.70	MDS57DS63L4
9.5	155	137.05	8010	1.90	MDSF57DS63L4
10	146	128.10	8040	2.0	MDSA57DS63L4
12	129	110.73	8110	2.3	MDSAF57DS63L4
14	111	94.08	8160	2.7	
15	101	84.00	8190	2.9	

n_a [1/min]	M_a [Nm]	i	F_{Ra} [N]	f_B	typ motoreduktora *gearmotor type*
0.25kW					
6.5	210	201.00	5120	0.80	
7.0	195	184.80	5210	0.85	
8.2	170	158.12	5340	1.00	
9.5	150	137.05	5440	1.10	
10	141	128.10	5480	1.20	
12	124	110.73	5560	1.35	MDS47DS63L4
14	108	94.08	5630	1.55	MDSF47DS63L4
15	98	84.00	5670	1.70	MDSA47DS63L4
18	85	71.75	5720	1.95	MDSAF47DS63L4
19	97	69.39	5640	1.60	
19	80	67.20	5740	2.1	
20	90	63.80	5670	1.70	
24	78	54.59	5720	2.0	
27	68	47.32	5760	2.3	
13	108	98.80	3000	0.80	
15	96	86.36	3000	0.90	
16	91	80.96	3000	0.95	
18	81	71.44	3000	1.05	
21	73	63.33	3000	1.10	
23	78	55.93	3000	1.05	
25	72	51.30	3000	1.15	
30	62	43.68	3000	1.30	
35	54	37.66	3000	1.45	
37	51	35.10	3000	1.55	
42	45	30.68	3000	1.70	MDS37DS63L4
45	42	28.76	3000	1.80	MDSF37DS63L4
51	37	25.38	3000	2.0	MDSA37DS63L4
58	33	22.50	3000	2.2	MDSAF37DS63L4
65	32	19.89	2870	1.65	
71	29	18.24	2820	1.80	
84	25	15.53	2710	2.0	
97	22	13.39	2620	2.3	
104	20	12.48	2570	2.4	
119	18	10.91	2480	2.7	
127	17	10.23	2440	2.8	
144	15	9.02	2360	3.1	
163	13	8.00	2290	3.4	
191	11	6.80	2180	3.8	
92	21	28.76	2740	3.0	
105	19	25.38	2650	3.3	
118	17	22.50	2560	3.4	MDS37DS63M2
134	16	19.89	2410	2.8	MDSF37DS63M2
146	15	18.24	2350	3.0	MDSA37DS63M2
171	13	15.53	2250	3.4	MDSAF37DS63M2
199	11	13.39	2160	3.8	
213	10	12.48	2120	4.0	

n_a [1/min]	M_a [Nm]	i	F_{Ra} [N]	f_B	typ motoreduktora *gearmotor type*
0.37kW					
0.67	2810	2054	25400	0.90	MDS87R57DS71S4
0.76	2490	1824	27500	1.00	MDSF87R57DS71S4
0.85	2230	1631	28000	1.10	MDSA87R57DS71S4
1.5	1320	930	29400	1.90	MDSAF87R57DS71S4
1.7	1190	831	29500	2.1	
1.9	1290	714	11500	0.95	
2.2	1150	637	12700	1.10	MDS77R37DS71S4
2.4	1040	574	13600	1.20	MDSF77R37DS71S4
2.8	900	499	14400	1.40	MDSA77R37DS71S4
3.2	785	438	15000	1.60	MDSAF77R37DS71S4
3.5	700	389	15400	1.80	
3.8	615	365	7700	0.95	MDS67R37DS71S4
4.3	535	319	8540	1.05	MDSF67R37DS71S4
4.9	470	281	9080	1.20	MDSA67R37DS71S4
5.6	425	246	9430	1.35	MDSAF67R37DS71S4
2.4	980	288.00	29700	2.5	MDS87D90S8
2.6	890	258.18	29800	2.8	MDSF87D90S8
3.1	775	222.40	29900	3.2	MDSA87D90S8
					MDSAF87D90S8
3.0	735	225.26	15200	1.75	MDS77D90S8
3.2	700	214.00	15300	1.80	MDSF77D90S8
3.6	630	189.09	15600	2.0	MDSA77D90S8
4.2	545	161.60	15900	2.3	MDSAF77D90S8
3.5	645	256.47	15600	2.0	MDS77DS71M6
4.0	575	225.26	15800	2.2	MDSF77DS71M6
4.2	545	214.00	15900	2.3	MDSA77DS71M6
					MDSAF77DS71M6
4.1	505	217.41	8810	1.10	MDS67DS71M6
4.7	450	190.11	9260	1.25	MDSF67DS71M6
5.0	430	180.60	9400	1.30	MDSA67DS71M6
5.7	380	158.45	9700	1.45	MDSAF67DS71M6
6.3	345	217.41	9900	1.50	
7.3	310	190.11	10100	1.70	MDS67DS71S4
7.6	295	180.60	10200	1.75	MDSF67DS71S4
8.7	260	158.45	10300	2.0	MDSA67DS71S4
10	225	134.40	10400	2.3	MDSAF67DS71S4
11	205	121.33	10500	2.5	
5.7	360	158.12	6490	0.80	
6.6	315	137.05	6930	0.95	MDS57DS71M6
7.0	300	128.10	7100	1.00	MDSF57DS71M6
8.1	265	110.73	7390	1.10	MDSA57DS71M6
9.6	230	94.08	7630	1.30	MDSAF57DS71M6
11	205	84.00	7760	1.45	
6.9	305	201.00	7050	0.95	
7.5	285	184.80	7230	1.05	
8.7	245	158.12	7510	1.20	
10	220	137.05	7690	1.35	MDS57DS71S4
11	205	128.10	7770	1.45	MDSF57DS71S4
12	180	110.73	7900	1.65	MDSA57DS71S4
15	156	94.08	8000	1.90	MDSAF57DS71S4
16	141	84.00	8060	2.1	
19	122	71.75	8130	2.4	
20	139	69.39	8070	1.75	

n_a [1/min]	M_a [Nm]	i	F_{Ra} [N]	f_B	typ motoreduktora *gearmotor type*
0.37kW					
21	115	67.20	8150	2.5	MDS57DS71S4
22	128	63.80	8110	1.90	MDSF57DS71S4
					MDSA57DS71S4
					MDSAF57DS71S4
10	210	137.05	5110	0.80	
11	199	128.10	5190	0.85	
12	175	110.73	5320	0.95	
15	151	94.08	5430	1.10	
16	137	84.00	5500	1.20	
19	119	71.75	5580	1.40	
20	136	69.39	5460	1.15	
21	112	67.20	5610	1.50	
22	126	63.80	5510	1.25	MDS47DS71S4
25	109	54.59	5590	1.40	MDSF47DS71S4
29	96	47.32	5410	1.60	MDSA47DS71S4
31	90	44.22	5330	1.75	MDSAF47DS71S4
36	78	38.23	5140	2.0	
42	67	32.48	4930	2.3	
48	60	29.00	4790	2.6	
56	52	24.77	4590	3.0	
59	49	23.20	4510	3.1	
68	46	20.33	4180	2.4	
78	40	17.62	4030	2.8	
84	37	16.47	3960	3.0	
22	103	63.33	3000	0.80	
27	101	51.30	3000	0.80	
32	87	43.68	3000	0.95	
37	76	37.66	3000	1.05	
39	71	35.10	3000	1.10	
45	63	30.68	3000	1.20	
48	59	28.76	3000	1.30	
54	52	25.38	2940	1.40	
61	47	22.50	2870	1.55	MDS37DS71S4
69	44	19.89	2610	1.20	MDSF37DS71S4
76	41	18.24	2570	1.30	MDSA37DS71S4
89	35	15.53	2500	1.45	MDSAF37DS71S4
103	30	13.39	2420	1.60	
111	28	12.48	2390	1.70	
127	25	10.91	2320	1.95	
135	23	10.23	2280	2.0	
153	21	9.02	2220	2.2	
173	18	8.00	2150	2.5	
203	16	6.80	2070	2.7	
104	28	25.38	2540	2.2	
118	25	22.50	2460	2.3	
133	24	19.89	2290	1.85	MDS37DS63L2
145	22	18.24	2250	2.0	MDSF37DS63L2
171	19	15.53	2160	2.3	MDSA37DS63L2
198	16	13.39	2080	2.5	MDSAF37DS63L2
212	15	12.48	2040	2.7	
243	13	10.91	1970	3.0	

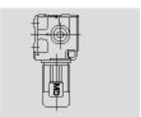

n_a [1/min]	M_a [Nm]	i	F_{Ra} [N]	f_B	typ motoreduktora *gearmotor type*
0.37kW					
259	12	10.23	1940	3.1	MDS37DS63L2 MDSF37DS63L2 MDSA37DS63L2 MDSAF37DS63L2
294	11	9.02	1870	3.3	
0.55kW					
1.0	2810	1332	25400	0.90	MDS87R57DS71M4 MDSF87R57DS71M4 MDSA87R57DS71M4 MDSAF87R57DS71M4
1.1	2540	1191	27400	1.00	
1.3	2210	1032	28100	1.15	
1.5	2040	930	28400	1.25	
1.6	1840	831	28700	1.35	
1.9	1600	719	29000	1.55	
2.2	1400	624	29300	1.80	
2.4	1270	558	29400	1.95	
3.1	1010	435	29700	2.4	
2.7	1380	499	6920	0.90	MDS77R37DS71M4 MDSF77R37DS71M4 MDSA77R37DS71M4 MDSAF77R37DS71M4
3.1	1210	438	12300	1.05	
3.5	1070	389	13300	1.15	
4.2	910	327	14300	1.35	
4.7	820	289	14800	1.50	
5.4	710	250	15300	1.75	
5.5	650	246	6600	0.90	MDS67R37DS71M4 MDSF67R37DS71M4 MDSA67R37DS71M4 MDSAF67R37DS71M4
6.2	580	221	8080	1.00	
6.9	530	198	8590	1.10	
8.1	455	168	9230	1.25	
2.4	1450	288.00	29200	1.70	MDS87D90L8 MDSF87D90L8 MDSA87D90L8 MDSAF87D90L8
2.6	1320	258.18	29400	1.85	
3.1	1150	222.40	29600	2.1	
3.1	1130	288.00	29600	2.2	MDS87DS80S6 MDSF87DS80S6 MDSA87DS80S6 MDSAF87DS80S6
3.5	1020	258.18	29700	2.4	
4.1	900	222.40	29800	2.7	
4.4	820	202.96	29800	2.9	
3.0	1090	225.26	13200	1.15	MDS77D90L8 MDSF77D90L8 MDSA77D90L8 MDSAF77D90L8
3.2	1040	214.00	13500	1.20	
3.6	930	189.09	14200	1.35	
4.2	810	161.60	14900	1.55	
3.5	960	256.47	14100	1.35	MDS77DS80S6 MDSF77DS80S6 MDSA77DS80S6 MDSAF77DS80S6
4.0	850	225.26	14700	1.50	
4.2	810	214.00	14800	1.55	
4.8	730	189.09	15200	1.75	
5.6	635	161.60	15600	2.0	
5.3	660	256.47	15500	1.90	MDS77DS71M4 MDSF77DS71M4 MDSA77DS71M4 MDSAF77DS71M4
6.0	590	225.26	15800	2.2	
6.4	560	214.00	15800	2.3	
7.2	505	189.09	16000	2.5	
6.3	520	217.41	8660	1.00	MDS67DS71M4 MDSF67DS71M4 MDSA67DS71M4 MDSAF67DS71M4
7.2	465	190.11	9150	1.10	
7.5	445	180.60	9300	1.15	
8.6	395	158.45	9620	1.30	
10	340	134.40	9930	1.55	
11	310	121.33	10100	1.65	

n_a [1/min]	M_a [Nm]	i	F_{Ra} [N]	f_B	typ motoreduktora *gearmotor type*
0.55kW					
13	275	106.75	10200	1.85	MDS67DS71M4 MDSF67DS71M4 MDSA67DS71M4 MDSAF67DS71M4
13	265	100.80	10300	1.95	
16	230	85.83	10400	2.3	
18	230	75.06	10400	2.1	
21	205	65.63	10500	2.3	
9.6	340	94.08	6710	0.85	MDS57DS80S6 MDSF57DS80S6 MDSA57DS80S6 MDSAF57DS80S6
11	305	84.00	7030	0.95	
13	265	71.75	7360	1.10	
13	250	67.20	7470	1.15	
16	245	54.59	7520	1.10	
19	215	47.32	7710	1.25	
20	200	44.22	7790	1.35	
24	176	38.23	7920	1.55	
8.6	370	158.12	6830	0.80	MDS57DS71M4 MDSF57DS71M4 MDSA57DS71M4 MDSAF57DS71M4
9.9	330	137.05	6820	0.90	
11	310	128.10	7010	0.95	
12	270	110.73	7320	1.10	
14	235	94.08	7590	1.25	
16	210	84.00	7730	1.40	
19	184	71.75	7880	1.55	
20	174	67.20	7930	1.65	
25	167	54.59	7960	1.45	
29	146	47.32	8040	1.70	
31	137	44.22	8080	1.80	
36	120	38.23	8130	2.0	
42	103	32.48	7970	2.4	
47	92	29.00	7730	2.7	
55	79	24.77	7390	3.1	
59	75	23.20	7250	3.3	
67	69	20.33	6760	2.4	
16	205	84.00	5140	0.80	MDS47DS71M4 MDSF47DS71M4 MDSA47DS71M4 MDSAF47DS71M4
19	179	71.75	5290	0.95	
20	169	67.20	5350	1.00	
25	165	54.59	5130	0.95	
29	144	47.32	5010	1.10	
31	135	44.22	4950	1.15	
36	118	38.23	4810	1.30	
42	101	32.48	4650	1.55	
47	91	29.00	4540	1.70	
55	78	24.77	4380	2.0	
59	74	23.20	4310	2.1	
67	69	20.33	3920	1.60	
77	60	17.62	3810	1.85	
83	56	16.47	3750	1.95	
96	49	14.24	3630	2.2	
112	42	12.10	3500	2.6	
126	37	10.80	3400	2.9	
147	32	9.23	3270	3.4	
44	94	30.68	2680	0.80	MDS37DS71M4 MDSF37DS71M4 MDSA37DS71M4 MDSAF37DS71M4
47	89	28.76	2670	0.85	
54	79	25.38	2630	0.95	
60	70	22.50	2600	1.05	
71	60	19.13	2540	1.20	

n_a [1/min]	M_a [Nm]	i	F_{Ra} [N]	f_B	typ motoreduktora *gearmotor type*
0.55kW					
88	53	15.53	2230	0.95	
102	46	13.39	2200	1.10	
109	43	12.48	2180	1.15	MDS37DS71M4
125	37	10.91	2130	1.30	MDSF37DS71M4
133	35	10.23	2110	1.35	MDSA37DS71M4
151	31	9.02	2070	1.50	MDSAF37DS71M4
170	28	8.00	2020	1.60	
200	24	6.80	1950	1.80	
94	46	28.76	2420	1.40	
106	41	25.38	2360	1.50	
120	37	22.50	2310	1.55	
136	34	19.89	2100	1.30	
148	32	18.24	2070	1.40	
174	27	15.53	2010	1.55	MDS37DS71M2
202	24	13.39	1950	1.75	MDSF37DS71M2
216	22	12.48	1920	1.85	MDSA37DS71M2
248	19	10.91	1870	2.0	MDSAF37DS71M2
264	18	10.23	1840	2.1	
299	16	9.02	1780	2.2	
338	14	8.00	1730	2.5	
397	12	6.80	1660	2.4	
0.75kW					
1.1	4840	1223	21300	0.85	
1.3	4240	1070	30700	1.00	
1.5	3650	928	33900	1.15	MDS97R57DS80S4
1.7	3230	824	34600	1.30	MDSF97R57DS80S4
1.9	2300	714	35900	1.85	MDSA97R57DS80S4
2.2	2450	626	35700	1.70	MDSAF97R57DS80S4
2.6	2110	538	36100	2.0	
2.8	1900	484	36300	2.2	
1.3	3030	1032	18700	0.85	
1.5	2780	930	25900	0.90	
1.7	2510	831	27500	1.00	MDS87R57DS80S4
1.9	2190	719	28100	1.15	MDSF87R57DS80S4
2.2	1920	624	28600	1.30	MDSA87R57DS80S4
2.5	1730	558	28900	1.45	MDSAF87R57DS80S4
3.2	1390	435	29300	1.75	
4.3	1060	323	29600	2.3	
4.2	1240	327	12000	1.00	MDS77R37DS80S4
4.8	1110	289	13100	1.10	MDSF77R37DS80S4
5.5	960	250	14000	1.30	MDSA77R37DS80S4
6.3	850	219	14700	1.45	MDSAF77R37DS80S4
2.4	2040	286.40	36100	2.1	MDS97D100M8
2.6	1890	262.22	36300	2.2	MDSF97D100M8
3.0	1690	231.67	36400	2.5	MDSA97D100M8
					MDSAF97D100M8
3.1	1540	288.00	29100	1.60	MDS87DS80M6
3.5	1400	258.18	29300	1.75	MDSF87DS80M6
4.1	1220	222.40	29500	1.95	MDSA87DS80M6
4.4	1120	202.96	29600	2.1	MDSAF87DS80M6
4.8	1050	288.00	29600	2.2	MDS87DS80S4
5.3	950	258.18	29700	2.4	MDSF87DS80S4
6.2	830	222.40	29800	2.8	MDSA87DS80S4
6.8	765	202.96	29900	3.0	MDSAF87DS80S4

n_a [1/min]	M_a [Nm]	i	F_{Ra} [N]	f_B	typ motoreduktora *gearmotor type*
0.75kW					
4.0	1160	225.26	12700	1.10	MDS77DS80M6
4.2	1110	214.00	13100	1.15	MDSF77DS80M6
4.8	990	189.09	13900	1.30	MDSA77DS80M6
5.6	860	161.60	14600	1.45	MDSAF77DS80M6
5.4	890	256.47	14500	1.45	
6.1	790	225.26	14900	1.60	
6.4	755	214.00	15100	1.70	
7.3	675	189.09	15400	1.90	MDS77DS80S4
8.5	585	161.60	15800	2.2	MDSF77DS80S4
9.3	545	148.15	15900	2.3	MDSA77DS80S4
11	480	130.00	16000	2.5	MDSAF77DS80S4
11	460	123.20	16000	2.6	
13	405	107.83	16000	2.9	
7.3	625	190.11	7570	0.85	
7.6	595	180.60	7900	0.85	
8.7	530	158.45	8570	1.00	
10	460	134.40	9180	1.15	
11	420	121.33	9470	1.25	
13	375	106.75	9750	1.40	MDS67DS80S4
14	355	100.80	9860	1.45	MDSF67DS80S4
16	305	85.83	10100	1.70	MDSA67DS80S4
18	310	75.06	10100	1.55	MDSAF67DS80S4
21	275	65.63	10200	1.75	
22	260	62.35	10300	1.85	
25	230	54.70	10300	2.1	
30	198	46.40	9840	2.4	
13	365	71.75	6430	0.80	
13	345	67.20	6660	0.85	MDS57DS80M6
16	295	56.61	7140	1.00	MDSF57DS80M6
19	295	47.32	7150	0.90	MDSA57DS80M6
20	275	44.22	7300	1.00	MDSAF57DS80M6
12	365	110.73	6400	0.80	
15	315	94.08	6930	0.95	
16	285	84.00	7210	1.05	
19	250	71.75	7500	1.15	
21	235	67.20	7590	1.20	
25	225	54.59	7650	1.10	
29	197	47.32	7810	1.25	
31	185	44.22	7870	1.35	MDS57DS80S4
36	161	38.23	7980	1.50	MDSF57DS80S4
42	138	32.48	7670	1.80	MDSA57DS80S4
48	124	29.00	7450	2.0	MDSAF57DS80S4
56	107	24.77	7150	2.3	
59	100	23.20	7030	2.5	
68	93	20.33	6490	1.80	
78	81	17.62	6260	2.1	
84	76	16.47	6160	2.2	
97	66	14.24	5930	2.6	
29	194	47.32	4530	0.80	
31	182	44.22	4500	0.85	MDS47DS80S4
36	159	38.23	4420	1.00	MDSF47DS80S4
42	136	32.48	4310	1.15	MDSA47DS80S4
48	122	29.00	4230	1.25	MDSAF47DS80S4

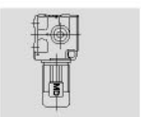

n_a [1/min]	M_a [Nm]	i	F_{Ra} [N]	f_B	typ motoreduktora *gearmotor type*
0.75kW					
56	106	24.77	4110	1.45	MDS47DS80S4 MDSF47DS80S4 MDSA47DS80S4 MDSAF47DS80S4
59	99	23.20	4060	1.55	
68	93	20.33	3610	1.20	
78	81	17.62	3530	1.35	
84	76	16.47	3490	1.45	
97	66	14.24	3410	1.65	
114	56	12.10	3300	1.95	
128	50	10.80	3230	2.2	
150	43	9.23	3120	2.5	
160	41	8.64	3070	2.7	
190	34	7.28	2950	3.0	
72	81	19.13	2270	0.85	MDS37DS80S4 MDSF37DS80S4 MDSA37DS80S4 MDSAF37DS80S4
111	57	12.48	1930	0.85	
127	50	10.91	1920	0.95	
135	47	10.23	1910	1.00	
153	42	9.02	1890	1.10	
173	37	8.00	1860	1.20	
203	32	6.80	1820	1.35	
141	43	19.13	2090	1.05	MDS37DS80S2 MDSF37DS80S2 MDSA37DS80S2 MDSAF37DS80S2
174	37	15.53	1860	1.15	
202	32	13.39	1820	1.30	
216	30	12.48	1800	1.35	
248	26	10.91	1760	1.50	
264	25	10.23	1740	1.55	
299	22	9.02	1690	1.65	
338	19	8.00	1650	1.80	
397	17	6.80	1590	1.75	
1.1kW					
1.7	4720	824	23300	0.90	MDS97R57DS80M4 MDSF97R57DS80M4 MDSA97R57DS80M4 MDSAF97R57DS80M4
2.0	3370	714	34400	1.25	
2.2	3590	626	34000	1.15	
2.6	3090	538	34800	1.35	
2.9	2790	484	35200	1.50	
3.3	2430	420	35700	1.75	
2.2	2820	624	25400	0.90	MDS87R57DS80M4 MDSF87R57DS80M4 MDSA87R57DS80M4 MDSAF87R57DS80M4
2.5	2550	558	27400	1.00	
2.9	2240	485	28000	1.10	
3.2	2040	435	28400	1.20	
3.7	1790	378	28800	1.35	
4.3	1560	323	29100	1.55	
5.0	1370	281	29300	1.75	
5.5	1460	255	29200	1.35	
6.3	1280	222	29400	1.55	
6.8	1200	205	29500	1.65	
6.4	1240	219	12000	1.00	MDS77R37DS80M4 MDSF77R37DS80M4 MDSA77R37DS80M4 MDSAF77R37DS80M4
2.4	3030	286.40	34900	1.40	MDS97D100L8 MDSF97D100L8 MDSA97D100L8 MDSAF97D100L8
2.6	2800	262.22	35200	1.50	
2.9	2500	231.67	35600	1.70	
3.5	2160	196.52	36000	1.95	

n_a [1/min]	M_a [Nm]	i	F_{Ra} [N]	f_B	typ motoreduktora *gearmotor type*
1.1kW					
3.2	2310	286.40	35900	1.80	MDS97DS90L6 MDSF97DS90L6 MDSA97DS90L6 MDSAF97DS90L6
3.5	2130	262.22	36000	1.95	
4.0	1900	231.67	36300	2.2	
3.2	2220	288.00	28100	1.10	MDS87DS90L6 MDSF87DS90L6 MDSA87DS90L6 MDSAF87DS90L6
3.6	2010	258.18	28400	1.20	
4.1	1760	222.40	28800	1.35	
4.5	1620	202.96	29000	1.45	
4.9	1520	288.00	29100	1.50	MDS87DS80M4 MDSF87DS80M4 MDSA87DS80M4 MDSAF87DS80M4
5.4	1370	258.18	29300	1.65	
6.3	1200	222.40	29500	1.90	
6.9	1100	202.96	29600	2.0	
7.8	990	180.00	29700	2.2	
9.2	840	151.30	29800	2.5	
6.2	1150	225.26	12800	1.10	MDS77DS80M4 MDSF77DS80M4 MDSA77DS80M4 MDSAF77DS80M4
6.5	1100	214.00	13200	1.15	
7.4	980	189.09	13900	1.30	
8.7	850	161.60	14700	1.50	
9.4	785	148.15	15000	1.60	
11	695	130.00	15400	1.75	
11	665	123.20	15500	1.80	
13	585	107.83	15800	2.0	
14	535	97.14	15900	2.1	
16	470	85.22	16000	2.3	
12	605	121.33	7790	0.85	MDS67DS80M4 MDSF67DS80M4 MDSA67DS80M4 MDSAF67DS80M4
13	540	106.75	8490	0.95	
14	515	100.80	8740	1.00	
16	445	85.83	9300	1.15	
18	405	78.00	9550	1.30	
21	400	65.63	9610	1.20	
22	380	62.35	9720	1.25	
26	335	54.70	9560	1.45	
30	285	46.40	9240	1.65	
33	260	41.89	9040	1.85	
38	230	36.85	8780	2.1	
40	220	34.80	8660	2.2	
47	187	29.63	8330	2.6	
20	360	71.75	6480	0.80	MDS57DS80M4 MDSF57DS80M4 MDSA57DS80M4 MDSAF57DS80M4
21	340	67.20	6710	0.85	
25	290	56.61	7180	0.90	
30	285	47.32	7220	0.85	
32	265	44.22	7360	0.90	MDS57DS80M4 MDSF57DS80M4 MDSA57DS80M4 MDSAF57DS80M4
37	235	38.23	7410	1.05	
43	200	32.48	7170	1.25	
48	179	29.00	7000	1.35	
57	154	24.77	6760	1.60	
60	145	23.20	6660	1.70	
72	123	19.54	6390	1.75	

n_a [1/min]	M_a [Nm]	i	F_{Ra} [N]	f_B	typ motoreduktora *gearmotor type*
1.1kW					
79	117	17.62	5870	1.45	MDS57DS80M4 MDSF57DS80M4 MDSA57DS80M4 MDSAF57DS80M4
85	110	16.47	5780	1.55	
98	95	14.24	5610	1.75	
116	82	12.10	5400	2.1	
130	73	10.80	5260	2.3	
152	63	9.23	5050	2.7	
48	177	29.00	3720	0.90	MDS47DS80M4 MDSF47DS80M4 MDSA47DS80M4 MDSAF47DS80M4
57	153	24.77	3670	1.00	
60	143	23.20	3640	1.05	
72	122	19.54	3560	1.20	
79	117	17.62	3070	0.95	
85	109	16.47	3060	1.00	
98	95	14.24	3030	1.15	
116	81	12.10	2980	1.35	
130	73	10.80	2940	1.50	
152	63	9.23	2870	1.75	
162	59	8.64	2840	1.85	
192	50	7.28	2750	2.1	
175	54	8.00	1570	0.85	MDS37DS80M4 MDSF37DS80M4 MDSA37DS80M4 MDSAF37DS80M4
206	46	6.80	1580	0.95	
202	47	13.39	1590	0.85	MDS37DS80S2 MDSF37DS80S2 MDSA37DS80S2 MDSAF37DS80S2
216	44	12.48	1580	0.90	
248	39	10.91	1570	1.00	
264	36	10.23	1560	1.05	
299	32	9.02	1540	1.10	
338	28	8.00	1510	1.25	
397	24	6.80	1470	1.20	
1.5kW					
2.0	4590	714	29100	0.90	MDS97R57DS90M4 MDSF97R57DS90M4 MDSA97R57DS90M4 MDSAF97R57DS90M4
2.2	4890	626	19100	0.85	
2.6	4220	538	31100	1.00	
2.9	3810	484	33600	1.10	
3.4	3310	420	34500	1.25	
3.8	2990	376	35000	1.40	
4.3	2630	327	35500	1.60	
2.9	3060	485	17200	0.80	MDS87R57DS90M4 MDSF87R57DS90M4 MDSA87R57DS90M4 MDSAF87R57DS90M4
3.2	2780	435	25900	0.90	
3.7	2450	378	27600	1.00	
4.4	2130	323	28200	1.15	
5.0	1870	281	28600	1.30	
5.5	2000	255	28400	1.00	
6.3	1750	222	28800	1.15	
6.9	1630	205	29000	1.20	
2.4	4030	286.40	33100	1.05	MDS97D112M8 MDSF97D112M8 MDSA97D112M8 MDSAF97D112M8
2.7	3720	262.22	33700	1.15	
3.0	3330	231.67	34400	1.25	
3.6	2870	196.52	35200	1.45	

n_a [1/min]	M_a [Nm]	i	F_{Ra} [N]	f_B	typ motoreduktora *gearmotor type*
1.5kW					
3.2	3150	286.40	34700	1.35	MDS97DS100M6 MDSF97DS100M6 MDSA97DS100M6 MDSAF97DS100M6
3.5	2910	262.22	35100	1.45	
4.0	2600	231.67	35500	1.60	
4.7	2230	196.52	35900	1.90	
4.9	2130	286.40	36000	1.90	MDS97DS90M4 MDSF97DS90M4 MDSA97DS90M4 MDSAF97DS90M4
5.4	1970	262.22	36200	2.0	
6.1	1760	231.67	36400	2.3	
7.2	1510	196.52	36600	2.7	
3.6	2740	258.18	26600	0.90	MDS87DS100M6 MDSF97DS100M6 MDSA97DS100M6 MDSAF97DS100M6
4.1	2390	222.40	27700	1.00	
4.5	2200	202.96	28100	1.10	
5.1	1980	180.00	28500	1.20	
4.9	2060	288.00	28300	1.10	MDS87DS90M4 MDSF87DS90M4 MDSA87DS90M4 MDSAF87DS90M4
5.5	1860	258.18	28700	1.20	
6.3	1630	222.40	29000	1.40	
6.9	1500	202.96	29200	1.50	
7.8	1340	180.00	29400	1.65	
9.3	1140	151.30	29600	1.90	
10	1060	139.05	29600	2.0	
11	950	123.48	29700	2.2	
13	850	110.40	29800	2.3	
14	770	99.26	29900	2.5	
7.5	1330	189.09	10600	0.95	MDS77DS90M4 MDSF77DS90M4 MDSA77DS90M4 MDSAF77DS90M4
8.7	1150	161.60	12700	1.10	
9.5	1060	148.15	13400	1.15	
11	940	130.00	14100	1.30	
11	900	123.20	14400	1.35	
13	795	107.83	14900	1.45	
15	725	97.14	15300	1.60	
17	640	85.22	15400	1.70	
19	650	75.09	14100	1.70	
20	620	71.33	14000	1.80	
21	510	66.67	14600	2.0	
22	550	63.03	13700	2.0	
25	440	56.92	14000	2.3	
26	470	53.87	13200	2.3	
29	435	49.38	13000	2.5	
33	385	43.33	12600	2.9	
16	600	85.83	7850	0.85	MDS67DS90M4 MDSF67DS90M4 MDSA67DS90M4 MDSAF67DS90M4
18	550	78.00	8390	0.95	
21	540	65.63	8510	0.90	
23	515	62.35	8740	0.95	MDS67DS90M4 MDSF67DS90M4 MDSA67DS90M4 MDSAF67DS90M4
26	455	54.70	8810	1.05	
30	390	46.40	8590	1.25	
34	355	41.89	8450	1.35	
38	310	36.85	8250	1.55	
41	295	34.80	8160	1.60	
48	255	29.63	7900	1.90	
52	230	26.93	7740	2.1	
58	220	24.44	7000	1.55	
61	210	23.22	6950	1.60	
69	186	20.37	6790	1.85	

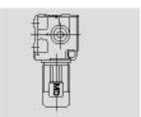

n_a [1/min]	M_a [Nm]	i	F_{Ra} [N]	f_B	typ motoreduktora *gearmotor type*
1.5kW					
82	159	17.28	6580	2.1	MDS67DS90M4 MDSF67DS90M4 MDSA67DS90M4 MDSAF67DS90M4
90	144	15.60	6440	2.4	
103	127	13.73	6260	2.7	
43	270	32.48	6630	0.90	MDS57DS90M4 MDSF57DS90M4 MDSA57DS90M4 MDSAF57DS90M4
49	245	29.00	6520	1.00	
57	210	24.77	6340	1.15	
61	196	23.20	6270	1.25	
72	167	19.54	6060	1.30	
80	159	17.62	5430	1.05	
86	149	16.47	5380	1.15	
99	129	14.24	5250	1.30	
117	110	12.10	5100	1.55	
131	99	10.80	4980	1.70	
153	85	9.23	4820	2.0	
99	129	14.24	2610	0.85	MDS47DS90M4 MDSF47DS90M4 MDSA47DS90M4 MDSAF47DS90M4
117	110	12.10	2620	1.00	
131	99	10.80	2620	1.10	
153	85	9.23	2590	1.30	MDS47DS90M4 MDSF47DS90M4 MDSA47DS90M4 MDSAF47DS90M4
163	79	8.64	2580	1.35	
194	67	7.28	2530	1.55	
299	44	9.02	1330	0.85	MDS37DS90M2 MDSF37DS90M2 MDSA37DS90M2 MDSAF37DS90M2
338	39	8.00	1350	0.90	
397	33	6.80	1340	0.90	
2.2kW					
3.4	4900	420	18800	0.85	MDS97R57DS90L4 MDSF97R57DS90L4 MDSA97R57DS90L4 MDSAF97R57DS90L4
3.8	4410	376	28300	0.95	
4.3	3870	327	33500	1.10	
4.9	3420	287	34300	1.25	
5.6	3000	252	35000	1.40	
3.3	4530	286.40	30200	0.95	MDS97DS100L6 MDSF97DS100L6 MDSA97DS100L6 MDSAF97DS100L6
3.6	4180	262.22	32800	1.00	
4.1	3730	231.67	33700	1.15	
4.8	3210	196.52	34600	1.30	
4.9	3130	286.40	34800	1.30	MDS97DS90L4 MDSF97DS90L4 MDSA97DS90L4 MDSAF97DS90L4
5.4	2890	262.22	35100	1.40	
6.1	2570	231.67	35500	1.55	
7.2	2210	196.52	36000	1.80	
7.8	2050	180.95	36100	1.90	
8.7	1840	161.74	36300	2.1	
9.7	1670	145.60	36500	2.2	
11	1520	131.85	36600	2.4	
12	1360	116.92	36700	2.6	
13	1240	105.71	36800	2.8	
16	1060	89.60	36900	3.1	
5.5	2730	258.18	26800	0.85	MDS87DS90L4 MDSF87DS90L4 MDSA87DS90L4 MDSAF87DS90L4
6.3	2380	222.40	27700	0.95	
6.9	2190	202.96	28100	1.05	
7.8	1970	180.00	28500	1.10	
9.3	1680	151.30	28900	1.30	

n_a [1/min]	M_a [Nm]	i	F_{Ra} [N]	f_B	typ motoreduktora *gearmotor type*
2.2kW					
10	1550	139.05	29100	1.35	MDS87DS90L4 MDSF87DS90L4 MDSA87DS90L4 MDSAF87DS90L4
11	1390	123.48	29300	1.50	
13	1250	110.40	29500	1.60	
14	1130	99.26	29600	1.75	
16	990	86.15	29700	1.90	
17	1060	81.76	29600	1.50	
18	890	77.14	29800	2.0	
20	920	70.43	29700	1.75	
22	840	64.27	29800	1.90	
25	750	57.00	29900	2.1	
11	1390	130.00	6140	0.85	MDS77DS90L4 MDSF77DS90L4 MDSA77DS90L4 MDSAF77DS90L4
11	1320	123.20	11100	0.90	
13	1170	107.83	12600	1.00	
15	1060	97.14	13400	1.10	
17	940	85.22	14100	1.15	
19	840	75.20	13800	1.30	
21	745	66.67	13500	1.40	
22	810	63.03	12400	1.35	
25	645	56.92	13100	1.55	
26	695	53.87	12100	1.60	
29	635	49.38	11900	1.75	
33	560	43.33	11700	1.95	
34	535	41.07	11600	2.1	
39	470	35.94	11300	2.3	
44	425	32.38	11000	2.6	
50	375	28.41	10700	2.8	
56	330	25.07	10400	3.1	
62	310	22.89	9490	2.3	
67	285	20.99	9340	2.5	
30	570	46.40	7480	0.85	MDS67DS90L4 MDSF67DS90L4 MDSA67DS90L4 MDSAF67DS90L4
34	515	41.89	7440	0.95	
38	460	36.85	7360	1.05	
41	435	34.80	7320	1.10	
48	370	29.63	7180	1.30	
52	340	26.93	7080	1.40	
60	295	23.33	6920	1.60	
69	275	20.37	6060	1.25	
82	235	17.28	5960	1.45	
90	210	15.60	5880	1.60	
103	186	13.73	5770	1.85	
109	176	12.96	5710	1.95	
128	151	11.03	5550	2.3	
141	137	10.03	5450	2.5	
162	119	8.69	5300	2.8	
99	190	14.24	4640	0.90	MDS57DS90L4 MDSF57DS90L4 MDSA57DS90L4 MDSAF57DS90L4
117	162	12.10	4580	1.05	
131	145	10.80	4520	1.15	
153	124	9.23	4420	1.35	
163	117	8.64	4380	1.40	
194	99	7.28	4250	1.50	

n_a [1/min]	M_a [Nm]	i	F_{Ra} [N]	f_B	typ motoreduktora *gearmotor type*
3.0kW					
4.9	4710	287	23700	0.90	MDS97R57DS100M4 MDSF97R57DS100M4 MDSA97R57DS100M4 MDSAF97R57DS100M4
5.6	4140	252	32400	1.00	
6.4	3620	219	33900	1.15	
6.8	3400	205	34300	1.25	
4.9	4290	286.40	32600	0.95	MDS97DS100M4 MDSF97DS100M4 MDSA97DS100M4 MDSAF97DS100M4
5.3	3960	262.22	33300	1.00	
6.0	3530	231.67	34100	1.15	
7.1	3040	196.52	34900	1.30	
7.7	2810	180.95	35200	1.40	
8.7	2530	161.74	35600	1.50	
9.6	2300	145.60	35900	1.65	
11	2090	131.85	36100	1.75	
12	1870	116.92	36300	1.90	
13	1700	105.71	36400	2.0	
16	1450	89.60	36600	2.2	
17	1470	80.85	36600	2.2	
7.8	2700	180.00	27100	0.80	MDS87DS100M4 MDSF87DS100M4 MDSA87DS100M4 MDSAF87DS100M4
9.2	2300	151.30	27900	0.95	
10	2130	139.05	28200	1.00	
11	1900	123.48	28600	1.10	
13	1720	110.40	28900	1.15	
14	1550	99.26	29100	1.25	
16	1360	86.15	29300	1.40	
17	1460	81.76	29200	1.10	
18	1230	77.14	29500	1.50	
20	1260	70.43	29400	1.25	
22	1160	64.27	29500	1.40	
25	1030	57.00	29700	1.55	
29	870	47.91	29800	1.85	
32	800	44.03	29800	2.0	
36	715	39.10	29900	2.2	
40	640	34.96	29900	2.5	
16	1290	85.22	11500	0.85	MDS77DS100M4 MDSF77DS100M4 MDSA77DS100M4 MDSAF77DS100M4
19	1150	75.20	12500	0.95	
21	1020	66.67	12400	1.00	
22	1110	63.03	10900	1.00	
25	880	56.92	12100	1.10	MDS77DS100M4 MDSF77DS100M4 MDSA77DS100M4 MDSAF77DS100M4
26	950	53.87	10800	1.15	
28	880	49.38	10800	1.25	
32	770	43.33	10700	1.40	
34	735	41.07	10600	1.50	
39	645	35.94	10400	1.70	
43	585	32.38	10300	1.85	
49	515	28.41	10100	2.0	
56	455	25.07	9840	2.2	
61	430	22.89	8680	1.65	
67	395	20.99	8590	1.80	
76	345	18.42	8450	2.0	
80	330	17.45	8390	2.2	
92	290	15.28	8210	2.5	
102	260	13.76	8060	2.7	

n_a [1/min]	M_a [Nm]	i	F_{Ra} [N]	f_B	typ motoreduktora *gearmotor type*
3.0kW					
116	230	12.07	7870	3.1	MDS77DS100M4 MDSF77DS100M4 MDSA77DS100M4 MDSAF77DS100M4
131	205	10.65	7670	3.5	
40	595	34.80	6350	0.80	MDS67DS100M4 MDSF67DS100M4 MDSA67DS100M4 MDSAF67DS100M4
47	510	29.63	6350	0.95	
52	465	26.93	6330	1.05	
60	405	23.33	6270	1.20	MDS67DS100M4 MDSF67DS100M4 MDSA67DS100M4 MDSAF67DS100M4
69	375	20.37	5230	0.90	
81	320	17.28	5250	1.05	
90	290	15.60	5240	1.15	
102	255	13.73	5210	1.35	
108	240	12.96	5190	1.40	
127	205	11.03	5100	1.65	
140	188	10.03	5050	1.80	
161	164	8.69	4940	2.0	
185	143	7.56	4830	2.1	
130	199	10.80	3990	0.85	MDS57DS100M4 MDSF57DS100M4 MDSA57DS100M4 MDSAF57DS100M4
152	171	9.23	3970	1.00	
162	160	8.64	3960	1.05	
192	136	7.28	3900	1.10	
4.0kW					
6.5	4780	219	22700	0.90	MDS97R57DS112M4 MDSF97R57DS112M4 MDSA97R57DS112M4 MDSAF97R57DS112M4
6.9	4490	205	27300	0.95	
6.1	4650	231.67	28300	0.85	MDS97DS112M4 MDSF97DS112M4 MDSA97DS112M4 MDSAF97DS112M4
7.2	3990	196.52	33200	1.00	
7.8	3700	180.95	33800	1.05	
8.8	3330	161.74	34400	1.15	
9.8	3020	145.60	34900	1.25	
11	2750	131.85	35300	1.35	
12	2460	116.92	35700	1.45	
13	2230	105.71	35900	1.55	
16	1910	89.60	36300	1.70	
18	1940	80.85	36200	1.65	
20	1720	71.43	36400	1.90	
23	1470	60.59	36600	2.2	
25	1350	55.79	36700	2.4	
12	2510	123.48	27500	0.80	MDS87DS112M4 MDSF87DS112M4 MDSA87DS112M4 MDSAF87DS112M4
13	2260	110.40	28000	0.90	
14	2040	99.26	28400	0.95	
16	1790	86.15	28800	1.05	
18	1610	77.14	29000	1.15	
20	1660	70.43	28900	0.95	
22	1520	64.27	29100	1.05	
25	1350	57.00	29300	1.20	
30	1150	47.91	29500	1.40	
32	1060	44.03	29600	1.50	
36	940	39.10	29700	1.70	

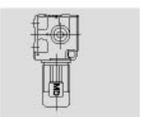

n_a [1/min]	M_a [Nm]	i	F_{Ra} [N]	f_B	typ motoreduktora *gearmotor type*
4.0kW					
41	840	34.96	29800	1.90	MDS87DS112M4
45	760	31.43	29100	2.1	MDSF87DS112M4
52	665	27.28	28200	2.4	MDSA87DS112M4
56	635	25.50	26600	1.95	MDSAF87DS112M4
25	1160	56.92	10800	0.85	MDS77DS112M4
26	1250	53.87	9250	0.90	MDSF77DS112M4
29	1150	49.38	9320	0.95	MDSA77DS112M4
33	1020	43.33	9370	1.10	MDSAF77DS112M4
35	960	41.07	9370	1.15	
40	850	35.94	9340	1.30	
44	765	32.38	9290	1.40	
50	675	28.41	9190	1.55	
57	600	25.07	9070	1.70	
62	565	22.89	7650	1.25	MDS77DS112M4
68	520	20.99	7650	1.35	MDSF77DS112M4
77	455	18.42	7620	1.55	MDSA77DS112M4
81	435	17.45	7590	1.65	MDSAF77DS112M4
93	380	15.28	7510	1.85	
103	345	13.76	7430	2.1	
118	300	12.07	7310	2.4	
133	265	10.65	7170	2.7	
150	235	9.44	7030	3.1	
176	205	8.06	6830	3.3	
82	420	17.28	3810	0.80	
91	380	15.60	4180	0.90	
103	335	13.73	4500	1.00	MDS67DS112M4
110	320	12.96	4520	1.05	MDSF67DS112M4
129	270	11.03	4530	1.25	MDSA67DS112M4
142	245	10.03	4520	1.35	MDSAF67DS112M4
163	215	8.69	4490	1.55	
188	188	7.56	4430	1.55	
5.5kW					
8.8	4550	161.74	29900	0.85	
9.8	4130	145.60	32900	0.90	
11	3760	131.85	33700	0.95	
12	3360	116.92	34400	1.05	
14	3050	105.71	34900	1.15	
16	2610	89.60	35500	1.25	MDS97DS132S4
18	2290	78.26	35900	1.35	MDSF97DS132S4
20	2350	71.43	35800	1.40	MDSA97DS132S4
22	1930	65.45	36200	1.50	MDSAF97DS132S4
24	2000	60.59	36200	1.65	
26	1850	55.79	36300	1.80	
29	1660	49.87	36500	2.0	
32	1500	44.89	36600	2.2	
35	1360	40.65	36700	2.4	
19	2200	77.14	28100	0.85	MDS87DS132S4
22	1850	64.00	28700	0.90	MDSF87DS132S4
25	1850	57.00	28700	0.85	MDSA87DS132S4
30	1560	47.91	29100	1.00	MDSAF87DS132S4

n_a [1/min]	M_a [Nm]	i	F_{Ra} [N]	f_B	typ motoreduktora *gearmotor type*
5.5kW					
32	1440	44.03	29200	1.10	
37	1280	39.10	29200	1.25	
41	1150	34.96	28600	1.40	
45	1040	31.43	28000	1.55	
52	910	27.28	27200	1.75	
56	870	25.50	25200	1.45	MDS87DS132S4
67	730	21.43	24500	1.70	MDSF87DS132S4
73	675	19.70	24100	1.85	MDSA87DS132S4
82	600	17.49	23500	2.1	MDSAF87DS132S4
91	535	15.64	23000	2.3	
102	485	14.06	22500	2.6	
117	420	12.21	21800	3.0	
131	375	10.93	21200	3.3	
35	1320	41.07	7560	0.85	MDS77DS132S4
40	1160	35.94	7750	0.95	MDSF77DS132S4
44	1050	32.38	7850	1.05	MDSA77DS132S4
					MDSAF77DS132S4
50	920	28.41	7920	1.15	
57	820	25.07	7940	1.25	
64	725	22.22	7920	1.35	
78	625	18.42	5920	1.15	
82	590	17.45	6170	1.20	MDS77DS132S4
94	520	15.28	6490	1.35	MDSF77DS132S4
104	470	13.76	6510	1.50	MDSA77DS132S4
118	410	12.07	6500	1.75	MDSAF77DS132S4
134	365	10.65	6450	2.0	
151	325	9.44	6390	2.2	
177	275	8.06	6280	2.5	
130	370	11.03	2930	0.90	MDS67DS132S4
143	340	10.03	3260	1.00	MDSF67DS132S4
165	295	8.69	3670	1.15	MDSA67DS132S4
189	255	7.56	3850	1.15	MDSAF67DS132S4
7.5kW					
14	4160	105.71	32900	0.85	
16	3560	89.60	34100	0.90	
18	3130	78.26	34800	1.00	
20	3200	71.43	34600	1.05	
22	2630	65.45	35500	1.10	
24	2730	60.59	35300	1.20	
26	2520	55.79	35600	1.30	MDS97DS132M4
29	2260	49.87	35900	1.45	MDSF97DS132M4
32	2040	44.89	36100	1.60	MDSA97DS132M4
35	1850	40.89	36300	1.80	MDSAF97DS132M4
40	1650	36.05	36200	2.0	
44	1490	32.60	35500	2.2	
54	1240	26.39	32000	2.1	
61	1110	23.59	31400	2.3	
67	1000	21.23	30700	2.6	
74	910	19.23	30100	2.9	

n_a [1/min]	M_a [Nm]	i	F_{Ra} [N]	f_B	typ motoreduktora *gearmotor type*
7.5kW					
32	1970	44.03	27800	0.80	MDS87DS132M4 MDSF87DS132M4 MDSA87DS132M4 MDSAF87DS132M4
37	1750	39.10	27400	0.90	
41	1570	34.96	27000	1.00	
45	1420	31.43	26500	1.15	MDS87DS132M4 MDSF87DS132M4 MDSA87DS132M4 MDSAF87DS132M4
52	1230	27.28	25900	1.30	
56	1180	25.50	23500	1.05	
67	1000	21.43	23000	1.25	
73	920	19.70	22700	1.35	
82	820	17.49	22300	1.50	
91	730	15.64	21900	1.70	
102	660	14.06	21500	1.90	
117	575	12.21	20900	2.2	
131	515	10.93	20500	2.4	
158	430	9.07	19700	2.7	
181	375	7.88	19100	2.7	
50	1260	28.41	6240	0.85	MDS77DS132M4 MDSF77DS132M4 MDSA77DS132M4 MDSAF77DS132M4
57	1110	25.07	6450	0.90	
64	990	22.22	6600	1.00	
78	850	18.42	1860	0.85	
82	810	17.45	2290	0.90	MDS77DS132M4 MDSF77DS132M4 MDSA77DS132M4 MDSAF77DS132M4
94	705	15.28	3250	1.00	
104	640	13.76	3890	1.10	
118	560	12.07	4570	1.30	
134	495	10.65	5110	1.45	
151	440	9.44	5540	1.65	
177	380	8.06	5560	1.80	
9.2kW					
18	3810	78.26	33600	0.80	MDS97DS160S4 MDSF97DS160S4 MDSA97DS160S4 MDSAF97DS160S4
22	3210	65.45	34600	0.90	
26	3070	55.79	34800	1.05	
29	2750	49.87	35300	1.20	MDS97DS160S4 MDSF97DS160S4 MDSA97DS160S4 MDSAF97DS160S4
32	2480	44.89	35600	1.35	
35	2260	40.65	35700	1.45	
40	2010	36.05	35000	1.65	
44	1820	32.60	34400	1.75	
55	1510	26.39	30700	1.70	
61	1350	23.59	30200	1.90	
68	1220	21.23	29700	2.1	
75	1110	19.23	29200	2.3	
84	980	17.05	28500	2.6	
93	890	15.42	28000	2.8	
110	755	13.07	27000	3.1	
126	660	11.41	26200	3.3	
41	1910	34.96	25600	0.85	MDS87DS160S4 MDSF87DS160S4 MDSA87DS160S4 MDSAF87DS160S4
46	1730	31.43	25300	0.95	
53	1500	27.28	24800	1.05	
59	1350	24.43	24400	1.20	

n_a [1/min]	M_a [Nm]	i	F_{Ra} [N]	f_B	typ motoreduktora *gearmotor type*
9.2kW					
71	1120	20.27	23700	1.40	MDS87DS160S4 MDSF87DS160S4 MDSA87DS160S4 MDSAF87DS160S4
73	1120	19.70	21600	1.10	
82	1000	17.49	21300	1.25	
92	890	15.64	21000	1.40	
102	800	14.06	20700	1.55	
118	700	12.21	20200	1.75	
132	625	10.93	19800	2.0	
159	520	9.07	19100	2.2	
183	455	7.88	18600	2.2	
76	1040	18.97	5760	0.90	MDS77DS160S4 MDSF77DS160S4 MDSA77DS160S4 MDSAF77DS160S4
105	780	13.76	1350	0.90	
119	685	12.07	2290	1.05	
135	605	10.65	3060	1.20	
152	535	9.44	3690	1.35	
179	460	8.06	4360	1.50	
11.0kW					
26	3670	55.79	33800	0.90	MDS97DS160M4 MDSF97DS160M4 MDSA97DS160M4 MDSAF97DS160M4
29	3290	49.87	34500	1.00	
32	2970	44.89	34800	1.10	
35	2700	40.65	34400	1.20	
40	2400	36.05	33800	1.40	
44	2170	32.60	33300	1.45	
55	1810	26.39	29400	1.45	
61	1620	23.59	29000	1.60	
68	1460	21.23	28600	1.80	
75	1320	19.23	28200	1.95	
84	1180	17.05	27600	2.2	
93	1070	15.42	27200	2.3	
110	900	13.07	26400	2.6	
126	790	11.41	25700	2.8	
53	1800	27.28	23700	0.90	MDS87DS160M4 MDSF87DS160M4 MDSA87DS160M4 MDSAF87DS160M4
59	1610	24.43	23400	1.00	
71	1340	20.27	22800	1.20	
73	1340	19.70	20400	0.95	
82	1190	17.49	20200	1.05	
92	1070	15.64	20000	1.15	
102	960	14.06	19800	1.30	
118	840	12.21	19400	1.50	
132	750	10.93	19100	1.65	
159	625	9.07	18600	1.85	
183	545	7.88	18100	1.85	
15.0kW					
33	4000	44.89	31400	0.85	MDS97DS180S4 MDSF97DS180S4 MDSA97DS180S4 MDSAF97DS180S4
36	3630	40.65	31300	0.90	
41	3230	36.05	31000	1.00	
45	2920	32.60	30800	1.10	MDS97DS180S4 MDSF97DS180S4 MDSA97DS180S4 MDSAF97DS180S4
55	2430	26.39	26400	1.05	
62	2180	23.59	26300	1.20	
69	1970	21.23	26200	1.30	
76	1780	19.23	26000	1.45	

n_a [1/min]	M_a [Nm]	i	F_{Ra} [N]	f_B	typ motoreduktora *gearmotor type*
15.0kW					
86	1580	17.05	25700	1.60	
95	1430	15.42	25400	1.70	MDS97DS180S4
112	1220	13.07	24800	1.90	MDSF97DS180S4
128	1060	11.41	24300	2.1	MDSA97DS180S4
153	890	9.55	23600	2.3	MDSAF97DS180S4
177	775	8.26	22900	2.3	
93	1430	15.64	17900	0.85	MDS87DS180S4
104	1290	14.06	17900	0.95	MDSF87DS180S4
120	1120	12.21	17800	1.10	MDSA87DS180S4
					MDSAF87DS180S4
134	1010	10.93	17600	1.25	MDS87DS180S4
161	840	9.07	17300	1.35	MDSF87DS180S4
185	730	7.88	17000	1.40	MDSA87DS180S4
					MDSAF87DS180S4
18.5kW					
41	3970	36.05	28700	0.85	
45	3590	32.60	28600	0.90	
53	3060	27.63	28400	1.00	
61	2680	24.13	28100	1.05	
69	2420	21.23	24100	1.10	MDS97DS180M4
76	2190	19.23	24100	1.20	MDSF97DS180M4
86	1950	17.05	24000	1.30	MDSA97DS180M4
95	1760	15.42	23900	1.40	MDSAF97DS180M4
112	1500	13.07	23500	1.55	
128	1310	11.41	23200	1.70	
153	1100	9.55	22600	1.85	
177	950	8.26	22100	1.85	
22kW					
53	3630	27.63	26600	0.85	
61	3180	24.13	26500	0.90	MDS97DS180L4
69	2870	21.23	19800	0.90	MDSF97DS180L4
76	2600	19.23	21800	1.00	MDSA97DS180L4
86	2310	17.05	22300	1.10	MDSAF97DS180L4
95	2090	15.42	22400	1.20	
112	1780	13.07	22300	1.30	MDS97DS180L4
128	1560	11.41	22100	1.40	MDSF97DS180L4
153	1300	9.55	21700	1.55	MDSA97DS180L4
177	1130	8.26	21300	1.55	MDSAF97DS180L4

8.5. Wymiary
8.5. Dimensions

MDS37..

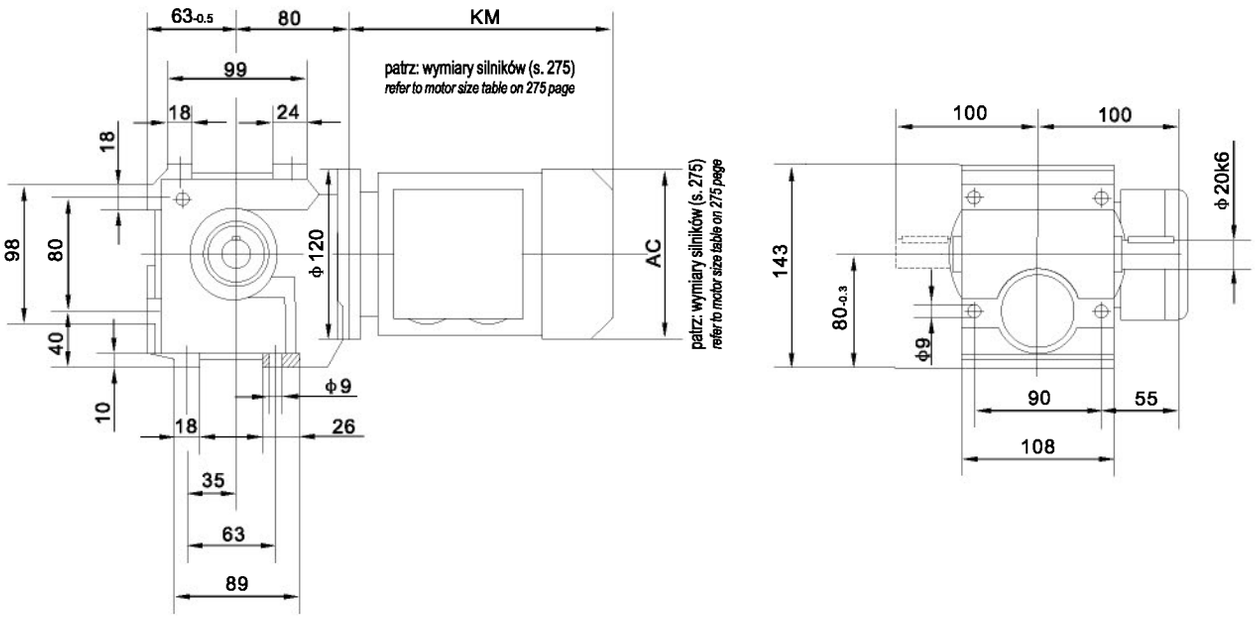

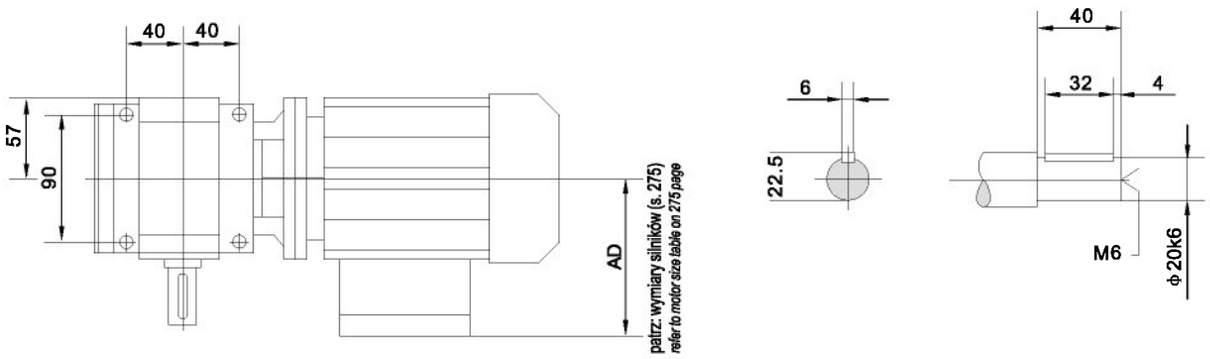

MDSF37..

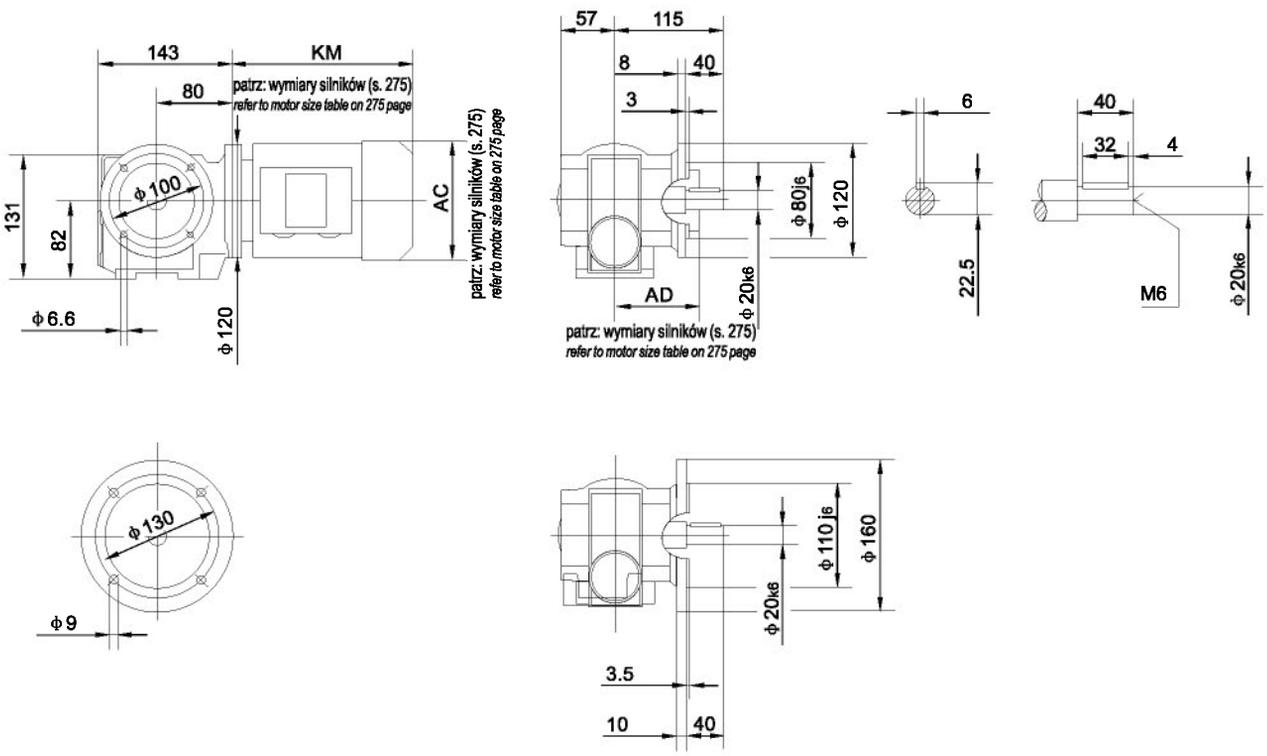

MDSAF37..

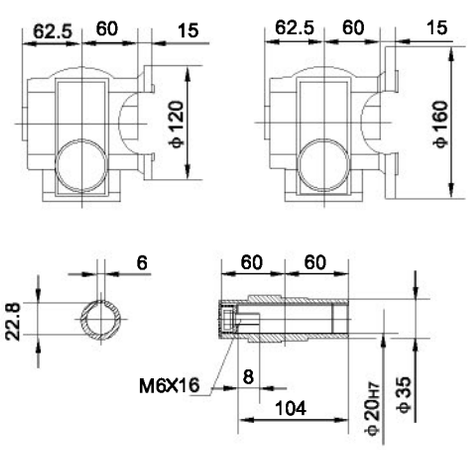

MDSHF37..

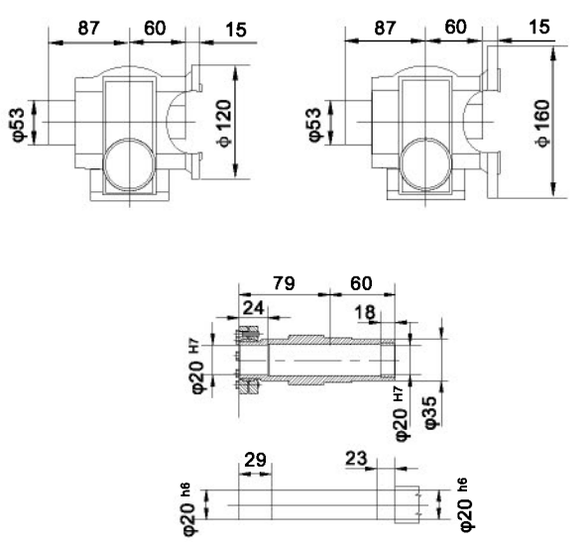

MDSA37..

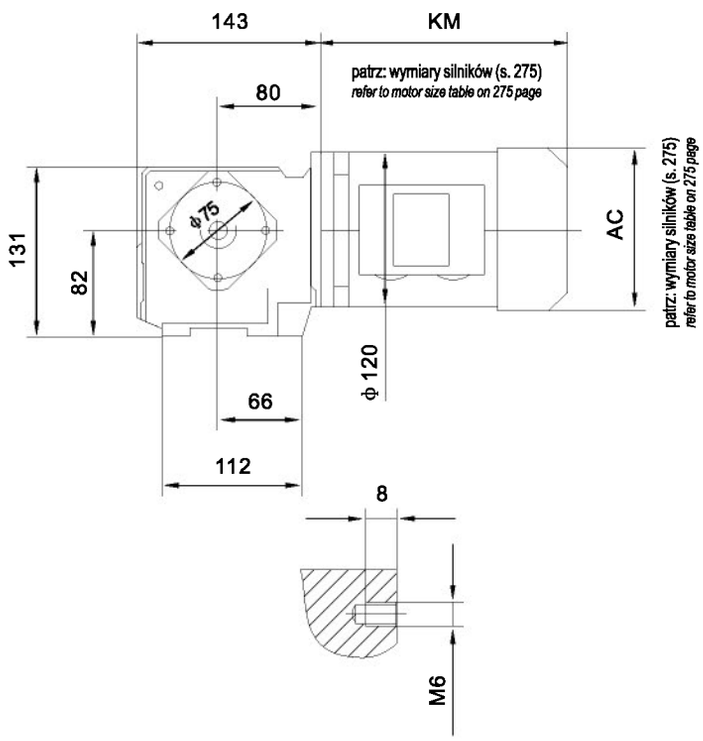
143
KM
80
patrz: wymiary silników (s. 275)
refer to motor size table on 275 page
131
82
ϕ75
AC
patrz: wymiary silników (s. 275)
refer to motor size table on 275 page
ϕ120
66
112
8
M6

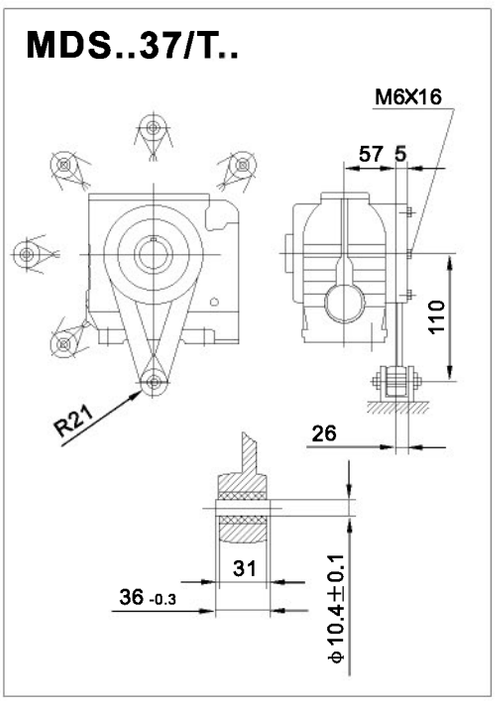
MDS..37/T..
M6X16
57
5
110
R21
26
31
36 -0.3
ϕ10.4±0.1

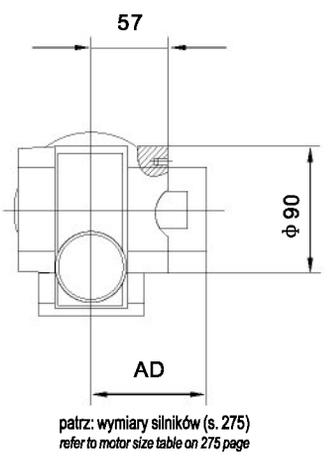
57
ϕ90
AD
patrz: wymiary silników (s. 275)
refer to motor size table on 275 page

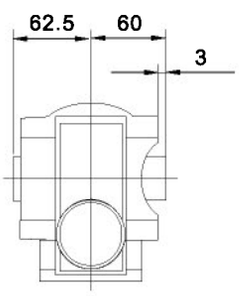
62.5
60
3

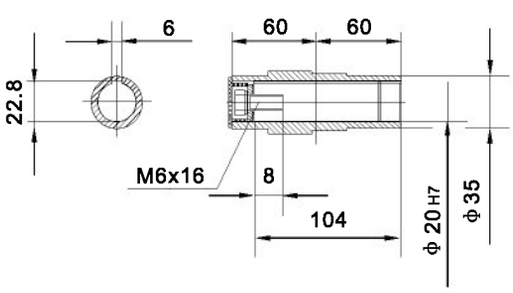
6
60
60
22.8
M6x16
8
104
ϕ20 H7
ϕ35

MDS47..~MDS97..

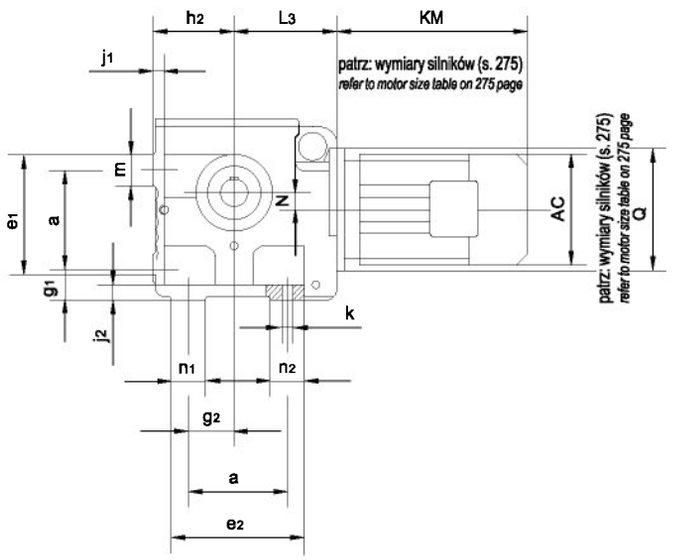

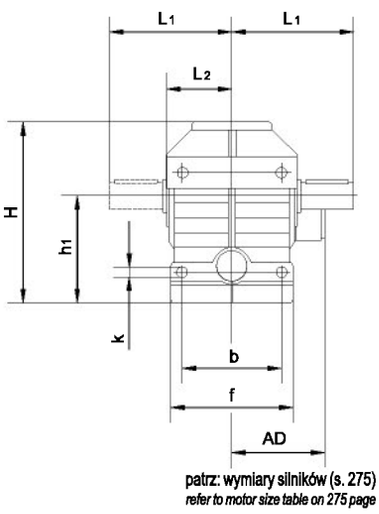

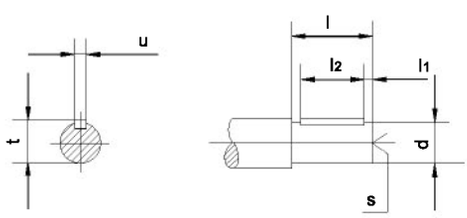

Wielkość *size*	a b	e_1 e_2 f	g_1 g_2	h_1 h_2	j_1 j_2 k	m n_1 n_2	Wymiary wału *(shaft dimension)* d l	 l_1 l_2	 s	 t u	L_1 L_2 L_3	H	N Q
MDS47..	80 100	105 112 120	35 35	$100_{-0.5}$ $75_{-0.5}$	12 15 11	25 30 30	25k6 50	5 40	M10	28 8	115 60 96	165	8 120
MDS57..	100 110	130 130 136	35 45	$112_{-0.5}$ $80_{-0.5}$	12 15 11	30 30 30	30k6 60	3.5 50	M10	33 8	134 71 107	189	20 120
MDS67..	130 130	170 175 160	40 60	$140_{-0.5}$ $106_{-0.5}$	15 20 13.5	40 45 45	35k6 70	7 56	M12	38 10	160 85.5 135	236	22 160
MDS77..	135 150	177 204 185	70 75	$180_{-0.5}$ $125_{-0.5}$	25 25 17.5	42 50 69	45k6 90	5 80	M16	48.5 14	195 101 162	301	34 200
MDS87..	180 200	230 247 250	82 92	$225_{-0.5}$ $150_{-0.5}$	30 30 22	50 60 67	60m6 120	5 110	M20	64 18	255 130 190	368	37.5 250
MDS97..	235 250	295 320 300	90 115	280_{-1} $180_{-0.5}$	35 35 26	60 80 85	70m6 140	7.5 125	M20	74.5 20	295 150 240	455	52 300

MDSF47..~MDSF97..

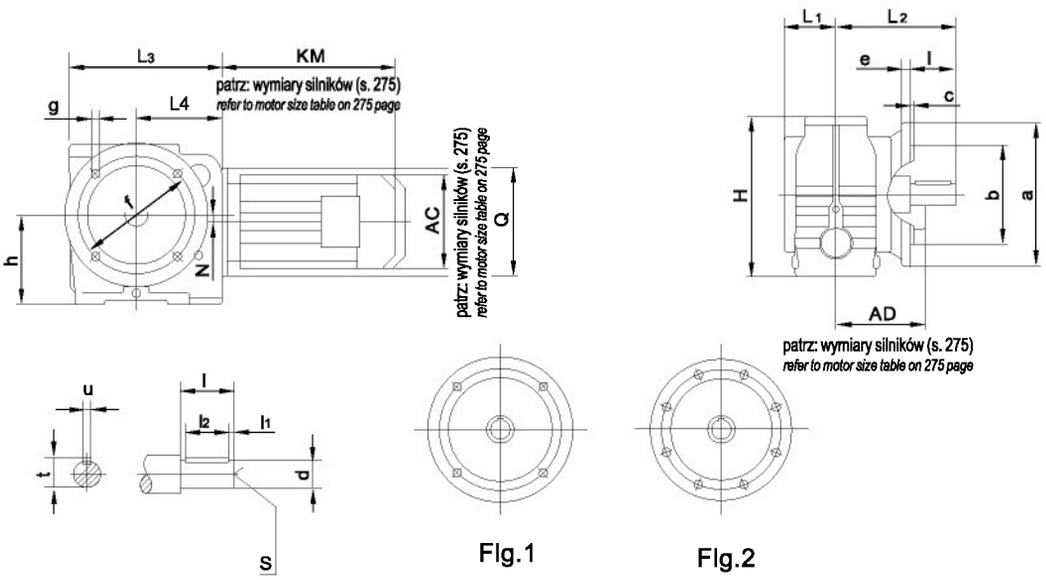

Flg.1 Flg.2

wersja kołnierzowa
flange form

MDSAF47..~MDSAF97

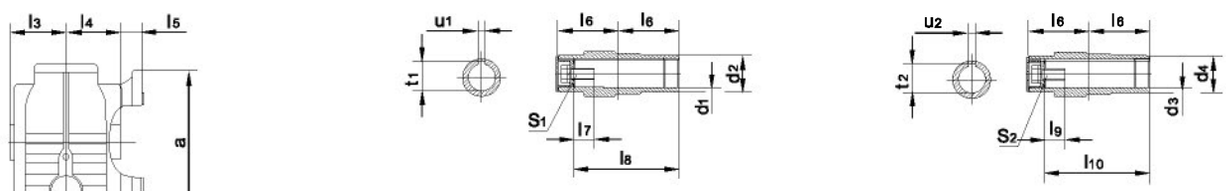

wał drążony (I)
hollow shaft (I)

wał drążony (II)
hollow shaft (II)

Wielkość *size*	Kołnierz *flange*	a b	c e	f g h	Wymiary wału *shaft dimension* d l	 l_1 l_2	 s t u	Wymiary wału drążonego (I) *hollow shaft dimension (I)* d_1 d_2	 l_3 l_4 l_5	 l_6 l_7 l_8	 s_1 t_1 u_1	Wym. wału drążon. (II) *hollow shaft dim. (II)* d_3 d_4	 l_9 l_{10}	 s_2 t_2 u_2	H N Q	L_1 L_2	L_3 L_4
MDSF47.. MDSAF47..	Flg.1	160 110j6	3.5 10	130 9 100	25k6 50	5 40	M10 28 8	30H7 45	63 60 24	60 17 105	M10 × 25 33.3 8	25H7 45	17 105	M10 × 25 28.3 8	179 8 120	57.5 133.5	171 96
MDSF57.. MDSAF57..	Flg.1	200 130j6	3.5 12	165 11 112	30k6 60	3.5 50	M10 33 8	35H7 50	78 75 25	75 22 132	M12 × 30 38.3 10	30H7 50	17 132	M10 × 25 33.3 8	189 20 120	72 160	187 107
MDSF67.. MDSAF67..	Flg.1	200 130j6	3.5 12	165 11 140	35k6 70	7 56	M12 38 10	45H7 65	87 84 42.5	84 29 144	M16 × 40 48.8 14	40H7 65	29 144	M16 × 40 43.3 12	236 22 160	80.5 190	242 135
MDSF77.. MDSAF77..	Flg.1	250 180j6	4 15	215 13.5 180	45k6 90	5 80	M16 48.5 14	60H7 80	108 105 45.5	105 37 180	M20 × 50 64.4 18	50H7 80	32 183	M16 × 45 53.8 14	301 34 200	121 232	287 162
MDSF87.. MDSAF87..	Flg.1	350 250h6	5 18	300 17.5 225	60m6 120	5 110	M20 64 18	70H7 95	128 125 52.5	125 34 220	M20 × 50 74.9 20	60H7 95	36 220	M20 × 50 64.4 18	368 37.5 250	145 290	340 190
MDSF97.. MDSAF97..	Flg.2	450 350h6	5 22	400 17.5 280	70m6 140	7.5 125	M20 74.5 20	90H7 120	149 145 60	145 41 255	M24 × 60 95.4 25	70H7 120	34 260	M20 × 50 74.9 20	455 52 300	165 340	420 240

MDSHF47..~MDSHF97..

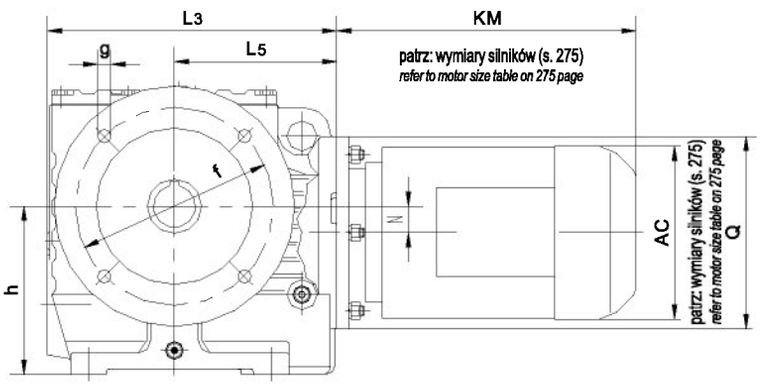

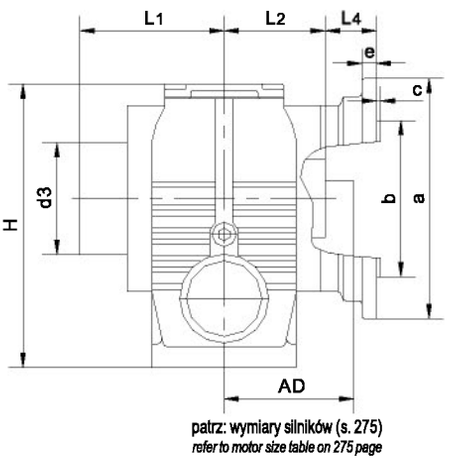

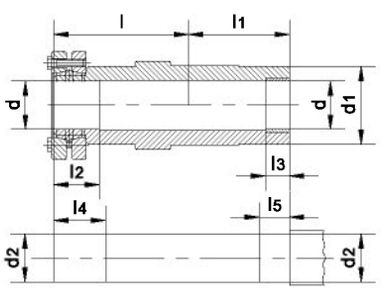

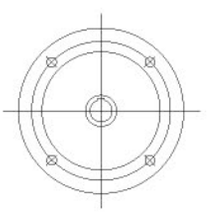

Fig.1

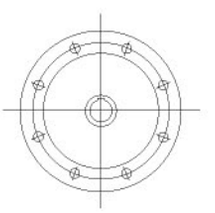

Fig.2

wersja kołnierzowa
flange form

Wielkość *size*	Kołnierz *flange*	a b	c e	f g h	l l1	l2 l3	l4 l5	d d1	d2 d3	H N Q	L1 L2	L3 L4	L5
MDSHF47..	Fig.1	160 110j6	3.5 10	130 9 100	86 60	31 20	36 25	30H7 45	30h6 75	179 8 120	57.5 60	171 24	96
MDSHF57..	Fig.1	200 130j6	3.5 12	165 11 112	102 75	32 20	37 25	35H7 50	35h6 83	189 20 120	72 75	187 25	107
MDSHF67..	Fig.1	200 130j6	3.5 12	165 11 140	112 84	38 20	43 25	40H7 65	40h6 93	236 22 160	80.5 84	242 42.5	135
MDSHF77..	Fig.1	250 180j6	4 15	215 13.5 180	136 105	36 30	41 35	50H7 80	50h6 114	301 34 200	121 105	287 45.5	162
MDSHF87..	Fig.1	350 250h6	5 18	300 17.5 225	165 125	40 40	45 45	65H7 95	65h6 157	368 37.5 250	145 125	340 52.5	190
MDSHF97..	Fig.2	450 350h6	5 22	400 17.5 145	190 145	55 50	60 55	75H7 120	75h6 174	455 52 300	165 145	420 60	240

MDSA47..~MDSA97..

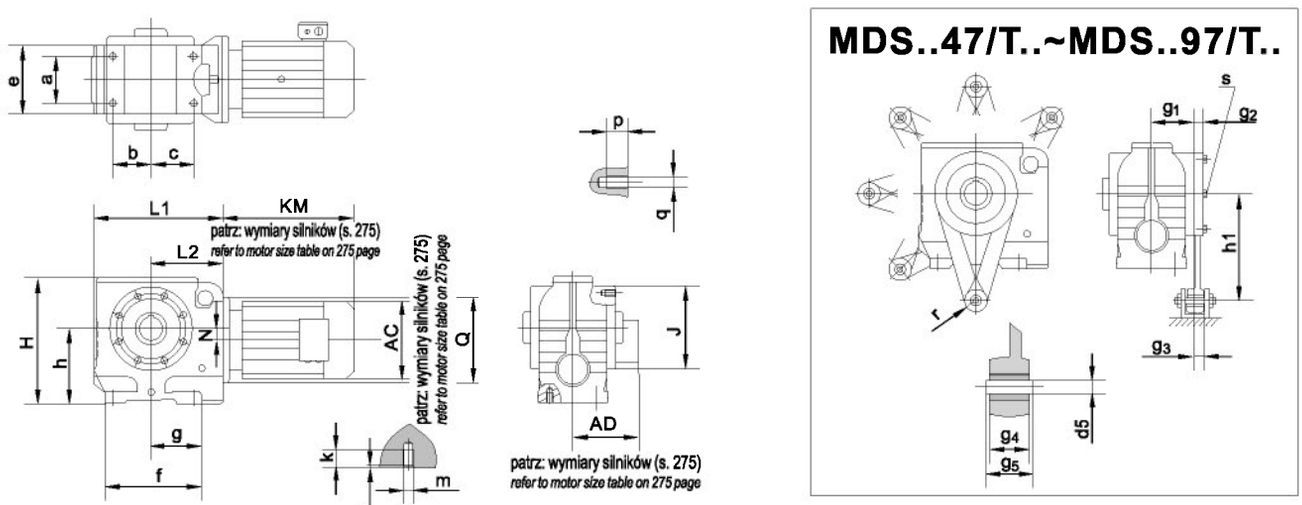

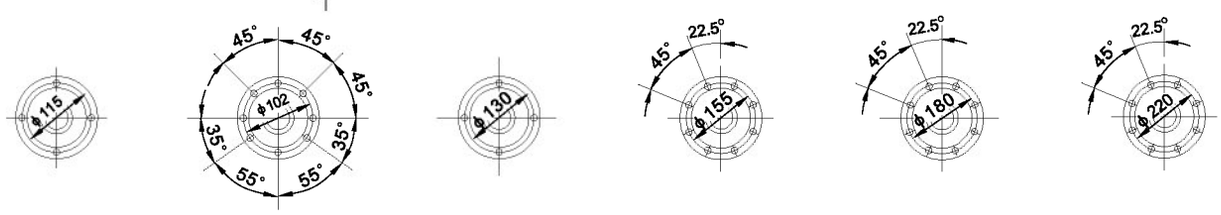

MDSA47.. MDSA57.. MDSA67.. MDSA77.. MDSA87.. MDSA97..

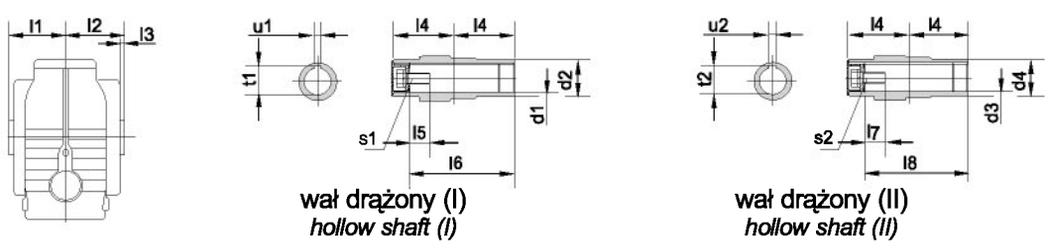

wał drążony (I)
hollow shaft (I)

wał drążony (II)
hollow shaft (II)

Wielkość *size*	a b c	e f g	h	k m n	p q	Wymiary wału drążonego (I) *hollow shaft dimension (I)*				Wym. wału drążon. (II) *hollow shaft dim. (II)*			Wym. ram. reakcyjn. *torque arm dim.*			H L_1 L_2	N Q J
						d_1 d_2	l_1 l_2 l_3	l_4 l_5 l_6	s_1 t_1 u_1	d_3 d_4	l_7 l_8	s_2 t_2 u_2	g_1 g_2 g_3	g_4 g_5 h_1	d_5 r s_3		
MDSA47..	60	94	100	20	12	30^{H7}	63	60	M10 × 25	25^{H7}	17	M10 × 25	57.5	31	10.4 ± 0.1	179	8
MDS..47/T..	35	127		M10			60	17	33.3			28.3	5	$36_{-0.3}$	21	171	120
	52	67		4	M8	45	2.5	105	8	45	105	8	20.5	130	M8 × 25	96	130
MDSA57..	60	100	112	20	12	35^{H7}	78	75	M12 × 30	30^{H7}	17	M10 × 25	72	31	10.4 ± 0.1	189	20
MDS..57/T..	58.5	146		M10			75	22	38.3			33.3	5	$36_{-0.3}$	21	187	120
	58.5	73		4	M8	50	3	132	10	50	132	8	18.5	160	M8 × 25	107	120
MDSA67..	88	128	140	25	20	45^{H7}	87	84	M16 × 40	40^{H7}	29	M16 × 40	80.5	31	10.4 ± 0.1	236	22
MDS..67/T..	71.5	182		M12			84	29	48.8			43.3	10	$36_{-0.3}$	21	242	160
	80.5	95.5		5	M12	65	3.5	144	14	65	144	12	19.5	200	M12 × 35	135	155
MDSA77..	102	154	180	32	20	60^{H7}	108	105	M20 × 50	50^{H7}	32	M16 × 45	101	54	16.4 ± 0.08	301	34
MDS..77/T..	85	204		M16			105	37	64.4			53.8	10	$60_{-0.3}$	30	287	200
	85	104		6	M12	80	4	180	18	80	183	14	32.5	250	M12 × 35	162	178
MDSA87..	118	194	225	32	26	70^{H7}	128	125	M20 × 50	60^{H7}	36	M20 × 50	120	54	16.4 ± 0.08	368	37.5
MDS..87/T..	115	260		M16			125	34	74.9			64.4	10	$60_{-0.5}$	30	340	250
	110	125		6	M16	95	5	220	20	95	220	18	25.5	310	M16 × 45	190	215
MDSA97..	160	236	280	36	26	90^{H7}	149	145	M24 × 60	70^{H7}	34	M20 × 50	140	72	25 ± 0.08	455	52
MDS..97/T..	135	301		M20			145	41	95.4			74.9	10	$80_{-0.5}$	40	420	300
	113	140		6	M16	120	5	255	25	120	260	20	33	380	M16 × 50	240	260

MDSH47..~MDSH97..

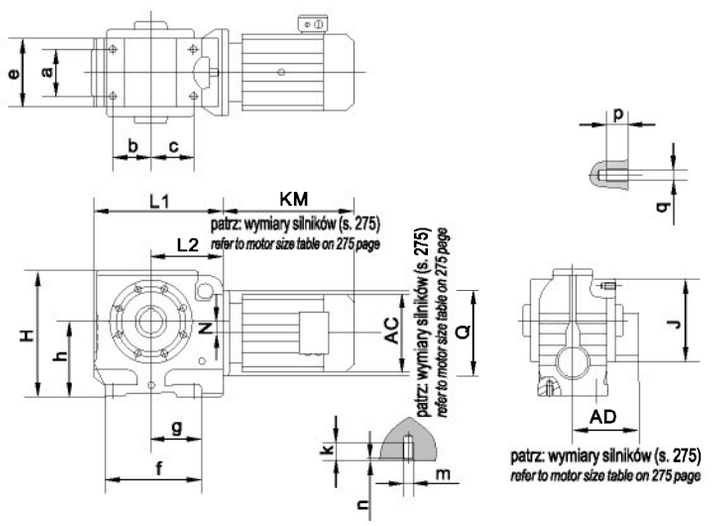

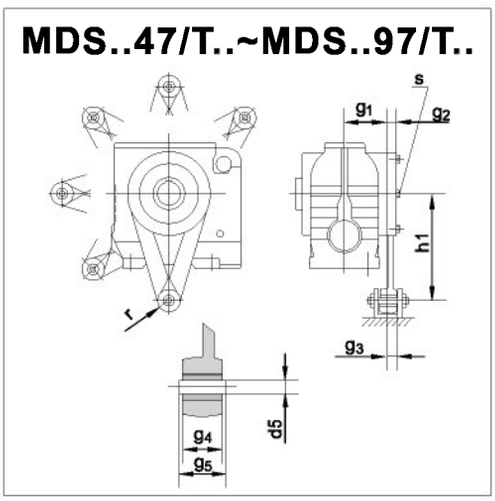

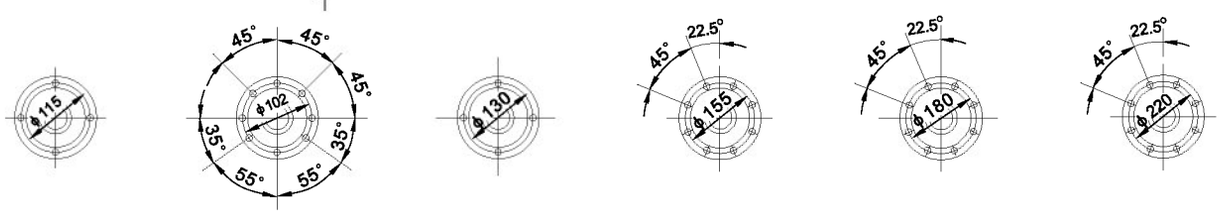

MDSH47.. MDSH57.. MDSH67.. MDSH77.. MDSH87.. MDSH97..

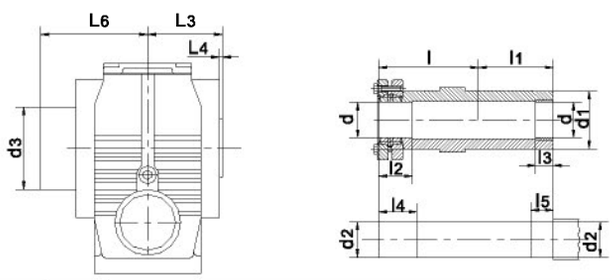

Wielkość *size*	a b c	e f g	h	k m n	p q	Wymiary wału drążonego *hollow shaft dimension* L L1	L2 L3	L4 L5	L6 d	d1 d2	d3	Wym. ram. reakcyjn. *torque arm dim.* g_1 g_2 g_3	g_4 g_5 h_1	d_5 r s_3	H L_1 L_2	L3 L4	N Q J
MDSH47.. MDS..47/T..	60 35 52	94 127 67	100	20 M10 4	12 M8	86 60	31 20	36 25	95 30H7	45 30h6	75	57.5 5 20.5	31 $36_{-0.3}$ 130	10.4 ± 0.1 21 M8 × 25	179 171 96	60 2.5	8 120 130
MDSH57.. MDS..57/T..	60 58.5 58.5	100 146 73	112	20 M10 4	12 M8	102 75	32 20	37 25	110 35H7	50 35h6	83	72 5 18.5	31 $36_{-0.3}$ 160	10.4 ± 0.1 21 M8 × 25	189 187 107	75 2.5	20 120 120
MDSH67.. MDS..67/T..	88 71.5 80.5	128 182 95.5	140	25 M12 5	20 M12	112 84	38 20	43 25	120 40H7	65 40h6	93	80.5 10 19.5	31 $36_{-0.3}$ 200	10.4 ± 0.1 21 M12 × 35	236 242 135	84 3.5	22 160 155
MDSH77.. MDS..77/T..	102 85 85	154 204 104	180	32 M16 6	20 M12	136 105	36 30	41 35	146 50H7	80 50h6	114	101 10 32.5	54 $60_{-0.3}$ 250	16.4 ± 0.08 30 M12 × 35	301 287 162	105 4	34 200 178
MDSH87.. MDS..87/T..	118 115 110	194 260 125	225	32 M16 6	26 M16	165 125	40 40	45 45	176 65H7	95 65h6	157	120 10 25.5	54 $60_{-0.5}$ 310	16.4 ± 0.08 30 M16 × 45	368 340 190	125 5	375 250 215
MDSH97.. MDS..97/T..	160 135 113	236 301 140	280	36 M20 6	26 M16	190 145	55 50	60 55	204 75H7	120 75h6	174	140 10 33	72 $80_{-0.5}$ 380	25 ± 0.08 40 M16 × 50	455 420 240	146 5	52 300 260

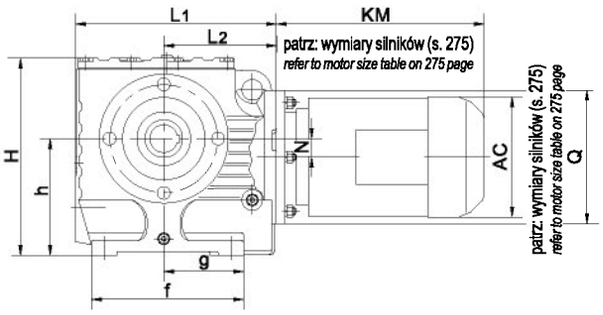

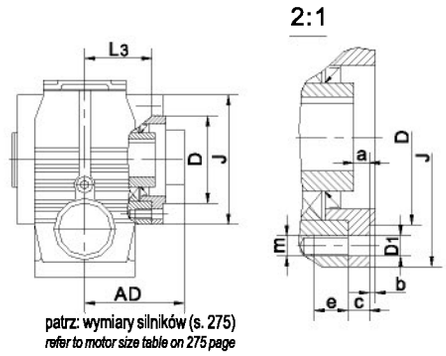

MDSAZ47..~MDSAZ97..

MDSHZ47..~MDSHZ97..

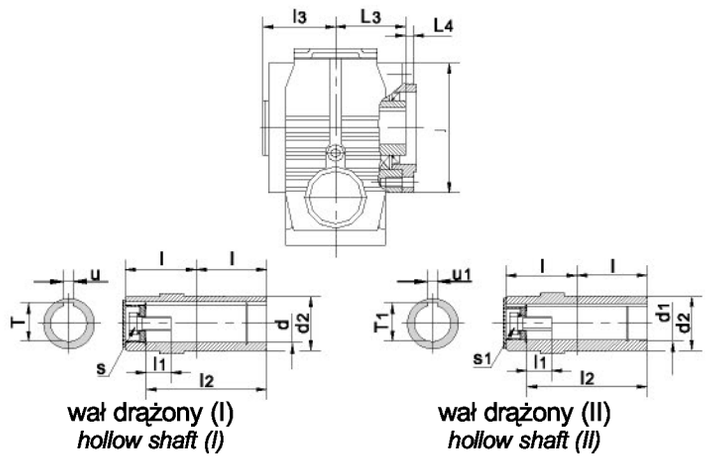

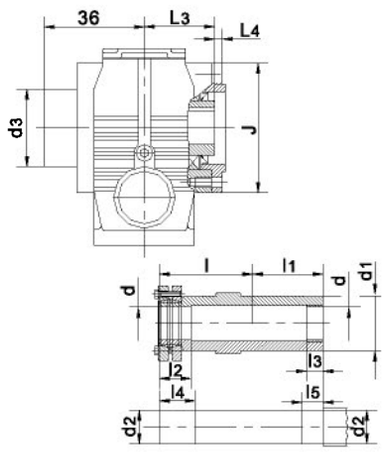

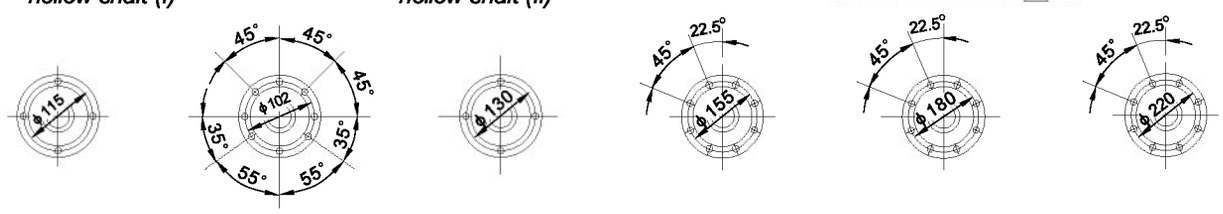

MDS..Z47.. MDS..Z57.. MDS..Z67.. MDS..Z77.. MDS..Z87.. MDS..Z97..

Wielkość *size*	a b c	e f g	h m	D D1	l	l1	l2	l3	l4	l5	l6	d	d1	d2	d3	u	u1	T	T1	S	S1	H L1 L2	L3 L4	N Q J
MDSAZ47..	8.5	12	100	95j6	60	17	105	63	-	-	-	30H7	25H7	45	-	8	8	33.3	28.3	M10×25	M10×25	179	60	8
MDSHZ47..	3 11	127 67	M8	9	86	60	31	20	36	25	95	30H7	45	30h6	75	-	-	-	-	-	-	171 96	8.5	120 130
MDSAZ57..	8	12	112	80j6	75	22	132	78	-	-	-	35H7	30H7	50	-	10	8	38.3	33.3	M12×30	M10×25	189	75	20
MDSHZ57..	3 11	146 73	M8	9	102	75	32	20	37	25	110	35H7	50	35h6	83	-	-	-	-	-	-	187 107	8	120 120
MDSAZ67..	9.5	20	140	105j6	84	29	144	87	-	-	-	45H7	40H7	65	-	14	12	48.8	43.3	M16×40	M16×40	236	84	22
MDSHZ67..	3.5 13	182 95.5	M12	13.5	112	84	38	20	43	25	120	40H7	65	40h6	93	-	-	-	-	-	-	242 135	9.5	160 155
MDSAZ77..	14.5	18.5	180	125j6	105	37	180	108	-	-	-	60H7	50H7	80	-	18	14	64.4	53.8	M20×50	M16×45	301	105	34
MDSHZ77..	4 14	204 104	M12	13.5	136	105	36	30	41	35	146	50H7	80	50h6	114	-	-	-	-	-	-	287 162	14.5	200 178
MDSAZ87..	18.5	23.5	225	150j6	125	36	220	128	-	-	-	70H7	60H7	95	-	20	18	74.9	64.4	M20×50	M20×50	368	125	375
MDSHZ87..	5 13.5	260 125	M16	17.5	165	125	40	40	45	45	176	65H7	95	65h6	157	-	-	-	-	-	-	340 190	18.5	250 215
MDSAZ97..	18.5	23.5	280	180j6	145	41	255	149	-	-	-	90H7	70H7	120	-	25	20	95.4	74.9	M24×60	M20×50	455	145	52
MDSHZ97..	5 13.5	301 140	M16	17.5	190	145	55	50	60	55	204	75H7	120	75h6	174	-	-	-	-	-	-	420 240	18.5	300 260

MDS..AD..

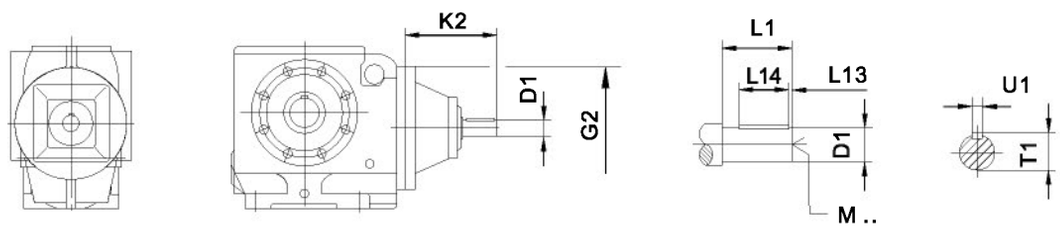

Wielkość *(size)*		G2	K2	D1	L1	L13	L14	T1	U1	M
MDS..37.. MDS..47.. MDS..57..	AD1	120	102	16k6	40	4	32	18	5	M5
	AD2		130	19k6	40	4	32	21.5	6	M6
MDS..67..	AD2	160	123	19k6	40	4	32	21.5	6	M6
	AD3		159	24k6	50	5	40	27	8	M8
MDS..77..	AD2	200	116	19k6	40	4	32	21.5	6	M6
	AD3		151	24k6	50	5	40	27	8	M8
	AD4		224	38k6	80	5	70	41	10	M12
MDS..87..	AD2	250	111	19k6	40	4	32	21.5	6	M6
	AD3		156	28k6	60	5	50	31	8	M10
	AD4		219	38k6	80	5	70	41	10	M12
	AD5		292	42k6	110	10	70	45	12	M16
MDS..97..	AD3	300	151	28k6	60	5	50	31	8	M10
	AD4		214	38k6	80	5	70	41	10	M12
	AD5		287	42k6	110	10	70	45	12	M16
	AD6		327	48k6	110	10	80	51.5	14	M16

MDS..AM..

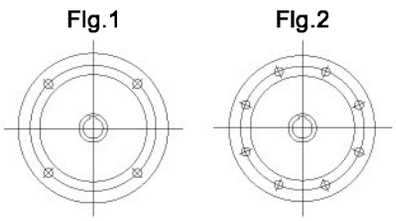

wersja kołnierzowa
flange form

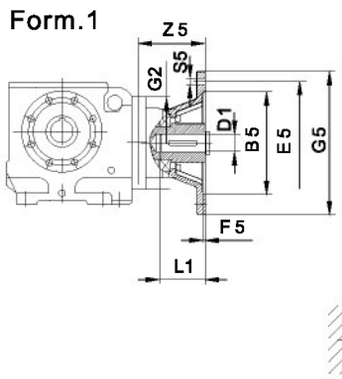

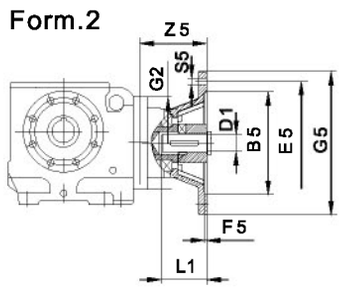

Wielkość *size*	IEC B5	Flg	Form	B5	E5	F5	G2	G5	S5	Z5	D1	L1	T1	U1
MDS..37 MDS..47 MDS..57	AM63	1	1	95G7	115	4.5	120	140	M8	72	11F7	23	12.8	4
	AM71[1)]			110G7	130			160		92.5	14F7	30	16.3	5
	AM80[1)]			130G7	165			200	M10	118	19F7	40	21.8	6
	AM90[1)]										24F7	50	27.3	8
MDS..67	AM63	1	1	95G7	115	4.5	160	140	M8	66	11F7	23	12.8	4
	AM71			110G7	130			160		87	14F7	30	16.3	5
	AM80			130G7	165			200	M10	113	19F7	40	21.8	6
	AM90										24F7	50	27.3	8
	AM100[1)]		2	180G7	215	5		250	M12	144	28H7	60	31.3	8
	AM112[1)]													
	AM132			230G7	265			300		177	38H7	80	41.3	10
MDS..77	AM63[1)]	1	1	95G7	115	4.5	200	140	M8	60	11F7	23	12.8	4
	AM71			110G7	130			160		79	14F7	30	16.3	5
	AM80			130G7	165			200	M10	105	19F7	40	21.8	6
	AM90										24F7	50	27.3	8
	AM100[1)]		2	180G7	215	5		250	M12	136	28H7	60	31.3	8
	AM112[1)]													
	AM132S[1)]			230G7	265			300		196	38H7	80	41.3	10
	AM132M[1)]													
	AM132ML [1)]													
MDS..87	AM80	1	1	130G7	165	4.5	250	200	M10	100	19F7	40	21.8	6
	AM90										24F7	50	27.3	8
	AM100		2	180G7	215	5		250	M12	131	28H7	60	31.3	8
	AM112													
	AM132S			230G7	265			300		191	38H7	80	41.3	10
	AM132M													
	AM132ML													
	AM160[1)]			250G7	300	6		350	M16	236	42H7	110	45.3	12
	AM180[1)]										48H7		51.8	14
MDS..97	AM100	1	2	180G7	215	5	300	250	M12	126	28H7	60	31.3	8
	AM112													
	AM132S			230G7	265			300		186	38H7	80	41.3	10
	AM132M													
	AM132ML													
	AM160			250G7	300	6		350	M16	231	42H7	110	45.3	12
	AM180										48H7		51.8	14
	AM200		1	300G7	350	7		400		268	55F7		59.3	16
	AM225[1)]	2	2	350G7	400	6		450		303	60H7	140	64.4	18

1) Obrys zewnętrzny kołnierza może wystawać poza płaszczyznę montażu łap (porównać średnicę kołnierza ze wzniosem wału).
Dimension G5/2 may protrude past foot mounting surface if mounted on a foot-mounted gear unit, please check.

MDS..R..

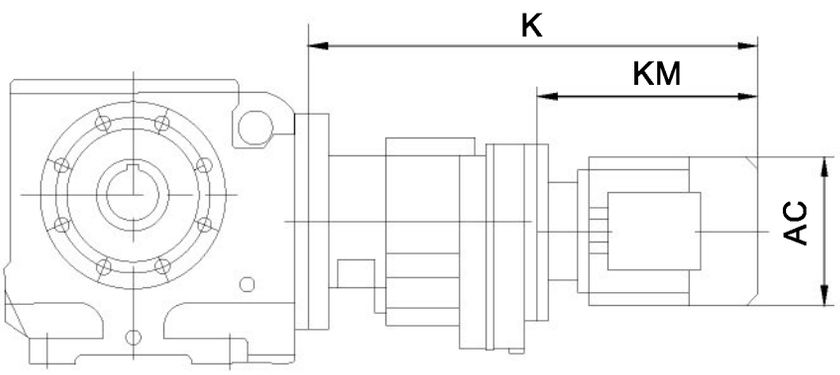

Wielkość *(size)*	Wielk. silnika *motor size*	AC	K	KM
MDS..37R17	DS63..	120	373	198
	DS71..	135	404	229
	DS80..	156	444	269
MDS..47R37 MDS..57R37	DS63..	120	363	198
	DS71..	135	394	229
	DS80..	156	434	269
MDS..67R37	DS63..	120	363	198
	DS71..	135	394	229
	DS80..	156	434	269
	DS90..	175	456	291
MDS..77R37	DS63..	120	355	198
	DS71..	135	386	229
	DS80..	156	426	269
	DS90..	175	448	291
MDS..87R57	DS63..	120	408	192
	DS71..	135	438	222
	DS80..	156	478	262
	DS90..	175	500	284
	DS100M	189	560	344
MDS..97R57	DS63..	120	403	192
	DS71..	135	433	222
	DS80..	156	473	262
	DS90..	175	495	284
	DS100M	189	555	344
	DS112M	221	603	392

Uwaga: Wymiary silnika podane w tabeli są tylko orientacyjne i zależą od dokładnego typu silnika.
Please note that the dimension of motor in the above table is only for reference. If you have special requirements, please contact us.

9. Informacje dotyczące konstrukcji i eksploatacji

9. Important notes of design and mounting

9.1. Montaż/demontaż przekładni z wałem drążonym i wpustem

9.1. Installation/removal of gear units with hollow shafts and keys

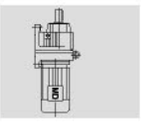

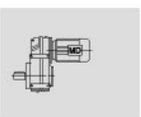

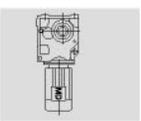

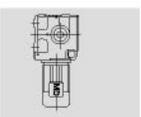

Istotna wskazówka
Important note

Podczas montażu należy zawsze używać syntetycznego oleju penetrującego o niskiej lepkości. Olej ten smaruje i chroni przed rdzą występującą przy korozji ciernej stali. Ułatwiony jest także późniejszy demontaż. Wymiary wpustu X ustala klient, jednakże należy wziąć pod uwagę, że X musi być większe niż DK (-średnica wału klienta).

During assembly always use the high performance lubricant. The fluid prevents contact corrosion and facilitates subsequent removal. The key dimension X is defined by the customer, however X must be greater than DK (-diameter of customer shaft).

Instalacja na wale
Installation on shaft

Zaleca się dwa warianty montażu przekładni z wałem drążonym i wpustem na wale napędowym maszyny roboczej (-wale klienta):

1. Użycie dołączonych części mocujących
2. Użycie opcjonalnego zestawu montażowego/demontażowego MegaDrive

Two assembly variants are recommended for installing gear units with hollow shaft and key onto the input shaft of the driven machine (-customer shaft):

1. Install with supplied fastening parts
2. Install using the optional MegaDrive installation/removal kit

Dołączone części mocujące
Supplied fastening parts

Standardowo dołączone są następujące części mocujące:
The following fastening parts are supplied as standard:

- Śruba mocująca z podkładką *(retaining screw with washer)* ②
- Pierścień osadczy sprężynujący *(retaining ring)* ③

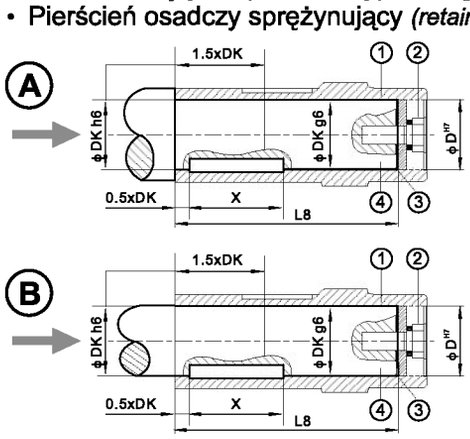

Wał klienta z odsadzaniem urządzenia [A]:
Długość wbudowania wału klienta musi być równa L8 - 1mm
Customer shaft with contact shoulder[A]:
The installation length of the customer shaft must be equal L8 - 1mm

Wał klienta bez odsadzania urządzenia [B]:
Długość wbudowania wału klienta musi być równa L8
Customer shaft without contact shoulder[B]:
The installation length of the customer shaft must be equal L8

Objaśnienie *(explanation):*
① Wał drążony *(hollow shaft)*
② Śruba mocująca z podkładką *(retaining screw with washer)*
③ Pierścień osadczy sprężynujący *(retaining ring)*
④ Wał klienta *(customer shaft)*

Śrubę mocującą ② należy dokręcić momentem dociągającym MS podanym w tabeli poniżej:
The retaining screw ② must be tightened to the tightening torque MS listed in the following table:

Wielkość przekładni *(gear unit size)*	D^{H7}[mm]	DK[mm]	L8[mm]	MS[Nm]
MDSA..37	20	20	84,106,104	8
MDSA..47	25	25	105	20
MDFA..37, MDKA..37, MDSA..47, MDSA..57	30	30	105, 132	20
MDFA..47, MDKA..47, MDSA..57	35	35	132	20
MDFA..57, MDKA..57, MDFA..67, MDKA..67, MDSA..67	40	40	142, 156, 144	40
MDSA..67	45	45	144	40
MDFA..77, MDKA..77, MDSA..77	50	50	183	40
MDFA..87, MDKA..87, MDSA..77, MDSA..87	60	60	210, 180, 220	80
MDFA..97, MDKA..97, MDSA..87, MDSA..97	70	70	270, 220, 260	80
MDFA..107, MDKA..107, MDSA..97	90	90	313, 313, 255	200
MDFA..127, MDKA..127	100	100	373	200
MDFA..157, MDKA..157	120	120	460	200

Opcjonalny zestaw montażowy/demontażowy
Optional installation/removal kit

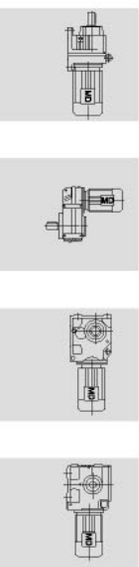

Do montażu można użyć opcjonalnego kompletu montażowego/demontażowego, który można zamówić dla danego typu przekładni pod odpowiednim numerem katalogowym z tabeli. W skład kompletu wchodzą:
For installation, you can use the optional installation/removal kit. It could be ordered for the specific gear unit types by quoting the part numbers in the table below. The delivery includes:

- Rura dystansowa do montażu bez odsadzania urządzenia *(spacer tube for installation without contact shoulder)* ⑤
- Śruba mocująca do montażu *(retaining screw for installation)* ②
- Podkładka odciskowa do demontażu *(removal washer for installation)* ⑦
- Zabezpieczona przed przekręceniem nakrętka do demontażu *(fixed nut for removal)* ⑧

Ⓐ

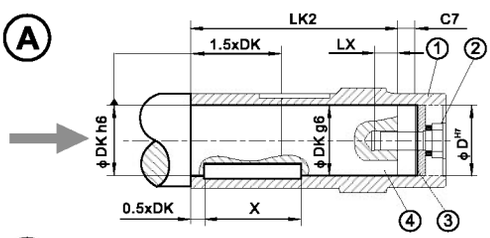

Wał klienta z odsadzaniem urządzenia [A]:
Długość wbudowania wału klienta musi być równa LK2. Nie wolno używać rury dystansowej.
Customer shaft with contact shoulder[A]:
The installation length of the customer shaft must be equal LK2. Do not use the spacer tube.

Ⓑ

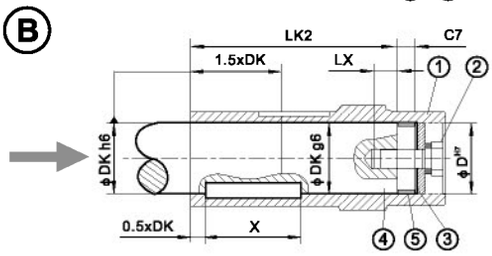

Wał klienta bez odsadzania urządzenia [B]:
Długość wbudowania wału klienta musi być równa LK2. Konieczne jest użycie rury dystansowej.
Customer shaft without contact shoulder[B]:
The installation length of the customer shaft must be equal LK2. It is necessary to use the spacer tube.

Objaśnienie *(explanation):*
① Wał drążony *(hollow shaft)*
② Śruba mocująca z podkładką *(retaining screw with washer)*
③ Pierścień osadczy sprężynujący *(retaining ring)*
④ Wał klienta *(customer shaft)*
⑤ Rura dystansowa *(spacer tube)*

Śrubę mocującą ② należy dokręcić momentem dociągającym MS podanym w tabeli poniżej:
The retaining screw ② must be tightened to the tightening torque MS listed in the following table:

Wielkość przekładni *(gear unit size)*	D^{H7}[mm]	DK[mm]	LK2[mm]	LX^{*2}[Nm]	C7[Nm]	MS[Nm]
MDSA..37	20	20	92	16	12	8
MDSA..47	25	25	89	22	16	20
MDFA..37, MDKA..37, MDSA..47, MDSA..57*	30	30	89,116*	22	16	20
MDFA..47, MDKA..47, MDSA..57	35	35	114	28	18	20
MDFA..57, MDKA..57, MDFA..67*, MDKA..67*, MDSA..67**	40	40	124,138*, 126**	36	18	40
MDSA..67	45	45	126	36	18	40
MDFA..77, MDKA..77, MDSA..77	50	50	165	36	18	40
MDFA..87, MDKA..87, MDSA..77*, MDSA..87**	60	60	188,158*,198**	42	22	80
MDFA..97, MDKA..97, MDSA..87*, MDSA..97**	70	70	248,198*,238**	42	22	80
MDFA..107, MDKA..107, MDSA..97*	90	90	287, 229*	50	26	200
MDFA..127, MDKA..127	100	100	347	50	26	200
MDFA..157, MDKA..157	120	120	434	50	26	200

Demontaż
Removal

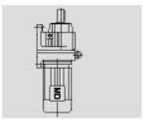
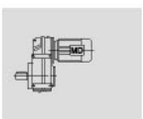
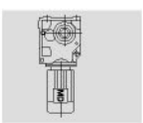
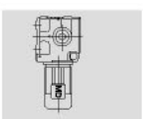

Poniższe kroki należy wykonać jedynie, jeśli montaż odbył się za pomocą opcjonalnego zestawu montażowego/demontażowego (patrz: poprzednia strona). Demontaż odbywa się w następujący sposób:

1. Odkręcić śrubę mocującą ⑥
2. Usunąć pierścień osadczy ③ oraz rurę dystansową ⑤, jeśli została zamontowana
3. Zgodnie z poniższym rysunkiem, należy umieścić podkładkę odciskową ⑦ i zabezpieczoną przed przekręceniem nakrętkę ⑧ między wałem klienta ④, a pierścieniem osadczym ③
4. Ponownie nasunąć pierścień osadczy ③
5. Ponownie wkręcić śrubę mocującą ⑥. Teraz można zdjąć przekładnię z wału.

Applies only if installation/removal kit (see: previous page) was previously used for installation. Proceed as follows for removal:

1. *Remove the retaining screw ⑥*
2. *Remove the retaining ring ③ and, if used, the spacer tube ⑤*
3. *Insert the forcing washer ⑦ and the fixed nut ⑧ between the customer shaft ④ and the retaining ring ③ according to the following figure*
4. *Re-insert the retaining ring ③*
5. *Re-insert the retaining screw ⑥. You can now push the gear unit off the shaft.*

Poniższe rysunki prezentują sposób zdjęcia przekładni z wału drążonego z rowkiem wpustowym:
Following figures shows the removal of a gear unit with hollow shaft and key:

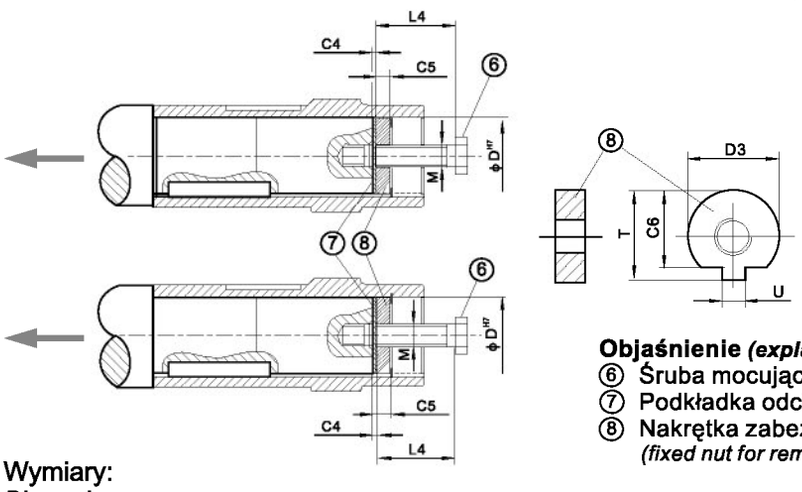

Objaśnienie ***(explanation):***
⑥ Śruba mocująca *(retaining screw)*
⑦ Podkładka odciskowa *(forcing washer)*
⑧ Nakrętka zabezpieczona przed przekręceniem *(fixed nut for removal)*

Wymiary:
Dimensions:

Wielkość przekładni *(gear unit size)*	D^{H7} [mm]	M	C4 [mm]	C5 [mm]	C6 [mm]	$U^{-0,5}$ [mm]	$T^{-0,5}$ [mm]	$D3^{-0,5}$ [mm]	L4 [mm]
MDSA..37	20	M6	5	6	15,5	5,5	22,5	19,7	25
MDSA..47	25	M10		10	20	7,5	28	24,7	35
MDFA..37, MDKA..37, MDSA..47, MDSA..57	30	M10		10	25	7,5	33	29,7	35
MDFA..47, MDKA..47, MDSA..57	35	M12		12	29	9,5	38	34,7	45
MDFA..57, MDKA..57, MDFA..67, MDKA..67, MDSA..67	40	M12		12	34	11,5	41,9	39,7	50
MDSA..67	45	M16		12	38,5	13,5	48,5	44,7	50
MDFA..77, MDKA..77, MDSA..77	50	M16		12	43,5	13,5	53,5	49,7	50
MDFA..87, MDKA..87, MDSA..77, MDSA..87	60	M16		16	56	17,5	64	59,7	60
MDFA..97, MDKA..97, MDSA..87, MDSA..97	70	M20		16	65,5	19,5	74,5	69,7	60
MDFA..107, MDKA..107	80	M20		20	75,5	21,5	85	79,7	70
MDFA..107, MDKA..107, MDSA..97	90	M24		20	80	24,5	95	89,7	70
MDFA..127, MDKA..127	100	M24		20	89	27,5	106	99,7	70
MDFA..157, MDKA..157	120	M24		20	107	31,0	127	119,7	70

9.2. Opcja: wał drążony z pierścieniem zaciskowym
9.2. Shouldered hollow shaft with shrink disk (option)

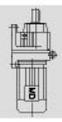


Przekładnie z wałem drążonym i pierścieniem zaciskowym (przekładnie płaskie MDFH/FHF/FHZ37-157, przekładnie stożkowe MDKH/KHF/KHZ37 i przekładnie walcowo-ślimakowe MDSH/SHF47/97) są opcjonalnie dostępne z większą wewnętrzną średnicą otworu D'. **Standardowo D'=D**

Gear units with a hollow shaf and shrink disk are also available with an optional larger bore diameter D'. ***D'=D as a standard.***

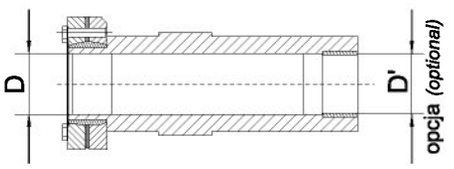

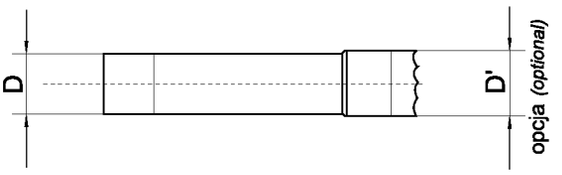

Wielkość przekładni *gear unit size*	Średnica otworu D/D' *bore diameter D/D'*
MDFH/FHF/FHZ37, MDKH/KHF/KHZ37, MDSH/SHF/SHZ47	30/32
MDFH/FHF/FHZ47, MDKH/KHF/KHZ47, MDSH/SHF/SHZ57	35/36
MDFH/FHF/FHZ57, MDKH/KHF/KHZ57	40/42
MDFH/FHF/FHZ67, MDKH/KHF/KHZ67, MDSH/SHF/SHZ67	40/42
MDFH/FHF/FHZ77, MDKH/KHF/KHZ77, MDSH/SHF/SHZ77	50/52
MDFH/FHF/FHZ87, MDKH/KHF/KHZ87, MDSH/SHF/SHZ87	65/66
MDFH/FHF/FHZ97, MDKH/KHF/KHZ97, MDSH/SHF/SHZ97	75/76
MDFH/FHF/FHZ107, MDKH/KHF/KHZ107	95/96
MDFH/FHF/FHZ127, MDKH/KHF/KHZ127	105/106
MDFH/FHF/FHZ157, MDKH/KHF/KHZ157	125/126

Podczas składania zamówienia na przekładnie z wałem drążonym (opcjonalna wewnętrzna średnica otworu D') należy podać średnicę D/D'.

Diameter D/D' must be specified when ordering gear units with a shouldered hollow shaft (optional bore diameter D').

Przykładowe zamówienie *(sample order)*: MDFH37 DS80S4 30/32

9.3. Waga przekładni i silników

9.3. Gear motors and gear reducers weights

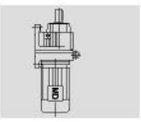
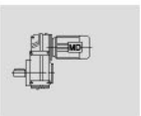
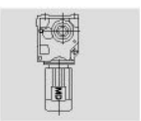
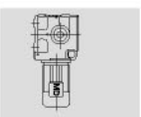

Wielkość przekładni *gear unit size*	Kg
MDRX57	9
MDRXF57	11
MDRX67	12
MDRXF67	16
MDRX77	20
MDRXF77	24
MDRX87	35
MDRXF87	40
MDRX97	59
MDRXF97	66
MDRX107	88
MDRXF107	103

Wielkość przekładni *gear unit size*	Kg
MDR..27	4
MDR..27F	4
MDR..37	10
MDR..37F	12
MDR..47	14
MDR..47F	14
MDR..57	20
MDR..57F	24
MDR..67	25
MDR..67F	29
MDR..77	30
MDR..77F	36

Wielkość przekładni *gear unit size*	Kg
MDR..87	55
MDR..87F	63
MDR..97	100
MDR..97F	118
MDR..107	130
MDR..137	235
MDR..147	360
MDR..167	605
MDR..177	980
MDR..187	1400

Wielkość przekładni *gear unit size*	Kg
MDF27	6.5
MDFA27	6
MDFF27	8
MDFAF27	7
MDF37	13
MDFA37	12
MDFF37	15
MDFAF37	14
MDF47	18
MDFA47	17
MDFF47	21
MDFAF47	20

Wielkość przekładni *gear unit size*	Kg
MDF57	25
MDFA57	24
MDFF57	31
MDFAF57	30
MDF67	31
MDFA67	27
MDFF67	37
MDFAF67	35
MDF77	55
MDFA77	50
MDFF77	66
MDFAF77	58

Wielkość przekładni *gear unit size*	Kg
MDF87	96
MDFA87	90
MDFF87	112
MDFAF87	105
MDF97	157
MDFA97	150
MDFF97	190
MDFAF97	171
MDF107	241
MDFA107	225
MDFF107	269
MDFAF107	245

Wielkość przekładni *gear unit size*	Kg
MDF127	401
MDFA127	365
MDFF127	447
MDFAF127	401
MDF157	632
MDFA157	610
MDFF157	740
MDFAF157	670
MDF167	1040
MDFA167	990
MDFF167	1520
MDFAF167	1460

Wielkość przekładni *gear unit size*	Kg
MDK37	12
MDKF37	15
MDKA37	11.5
MDKAF37	15
MDK47	19
MDKF47	22.5
MDKA47	18
MDKAF47	21
MDK57	24
MDKF57	29
MDKA57	22
MDKAF57	28

Wielkość przekładni *gear unit size*	Kg
MDK67	30
MDKF67	36
MDKA67	37
MDKAF67	34
MDK77	54
MDKF77	62
MDKA77	46
MDKAF77	55
MDK87	90
MDKF87	100
MDKA87	78
MDKAF87	91

Wielkość przekładni *gear unit size*	Kg
MDK97	150
MDKF97	171
MDKA97	130
MDKAF97	156
MDK107	260
MDKF107	271
MDKA107	231
MDKAF107	265
MDK127	410
MDKF127	452
MDKA127	381
MDKAF127	419

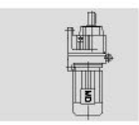
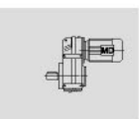
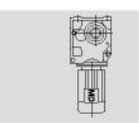
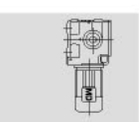

Wielkość przekładni *gear unit size*	Kg
MDK157	635
MDKF157	715
MDKA157	603
MDKAF157	660
MDK167	1035
MDKH167	1000
MDK187	1615
MDKH187	1550

Wielkość przekładni *gear unit size*	Kg
MDS37	6
MDSF37	8
MDSA37	6
MDSAF37	7.5
MDS47	10
MDSF47	14
MDSA47	11
MDSAF47	13
MDS57	14
MDSF57	18
MDSA57	14
MDSAF57	17

Wielkość przekładni *gear unit size*	Kg
MDS67	25
MDSF67	32
MDSA67	26
MDSAF67	31
MDS77	45
MDSF77	55
MDSA77	45
MDSAF77	52
MDS87	80
MDSF87	101
MDSA87	76
MDSAF87	94

Wielkość przekładni *gear unit size*	Kg
MDS97	140
MDSF97	171
MDSA97	135
MDSAF97	160

Wielkość silnika *motor size*	Kg
DS63S2	6.5
DS63M2	6.8
DS63L2	7.3
DS71M2	9.1
DS80S2	11.5
DS80M2	14.3
DS90M2	18.4
DS90L2	21.5
DS100M2	26
DS112M2	41.5
DS132S2	44
DS132M2	60

Wielkość silnika *motor size*	Kg
DS160S2	80
DS160M2	106
DS160L2	114
DS180M2	168
DS200L2	236
DS225M2	288
D250M2	382
D280S2	494
DS280M2	550

Wielkość silnika *motor size*	Kg
DS63S4	6.2
DS63M4	6.5
DS63L4	7.5
DS71S4	7.8
DS71M4	9.1
DS80S4	11.5
DS80M4	14.2
DS90M4	18.4
DS90L4	21.5
DS100M4	26
DS112M4	41.5
DS132S4	44

Wielkość silnika *motor size*	Kg
DS132M4	60
DS160S4	80
DS160M4	92
DS180S4	122
DS180M4	141
DS180L4	152
DS200L4	260
DS225S4	295
DS225M4	315
D250M4	400
D280S4	515
D280M4	601

Wielkość silnika *motor size*	Kg
DS63M6	6.6
DS63L6	7.2
DS71S6	7.8
DS71M6	9.1
DS80S6	11.5
DS80M6	14.3
DS90L6	21.3
DS100M6	26
DS100L6	41.5
DS112M6	41.5
DS132S6	44
DS160S6	80

Wielkość silnika *motor size*	Kg
DS160M6	92
DS180M6	126
DS180L6	169
DS200L6	225
DS225M6	280
DS250M6	378
DS280S6	475
D280M6	541

Uwaga: waga przekładni w tabelach jest uśredniona dla wszystkich dostępnych przełożeń w danej wielkości. Wszystkie zawarte dane o wadze motoreduktorów nie uwzględniają środków smarnych. Waga uzależniona jest od wersji i wymiarów przekładni, a poziom oleju zależny od pozycji pracy. Orientacyjne ilości środków smarnych znajdują się w rozdziale 9.9. Środki smarne (s. 279). Dokładna waga jest podana w potwierdzeniu zamówienia.

Please note that the weight of reducers in the table is the average weight of each ratio. All weight specifications are without lubricant, which fill depends on the selected mounting position. Guide values for lubricant fill quantities based on the mounting position are provided in the chapter 9.9. Lubricants (page: 279). The exact weight is given in the order confirmation.

9.4. Adaptery do montażu silników IEC

9.4. Adapters for mounting IEC motors

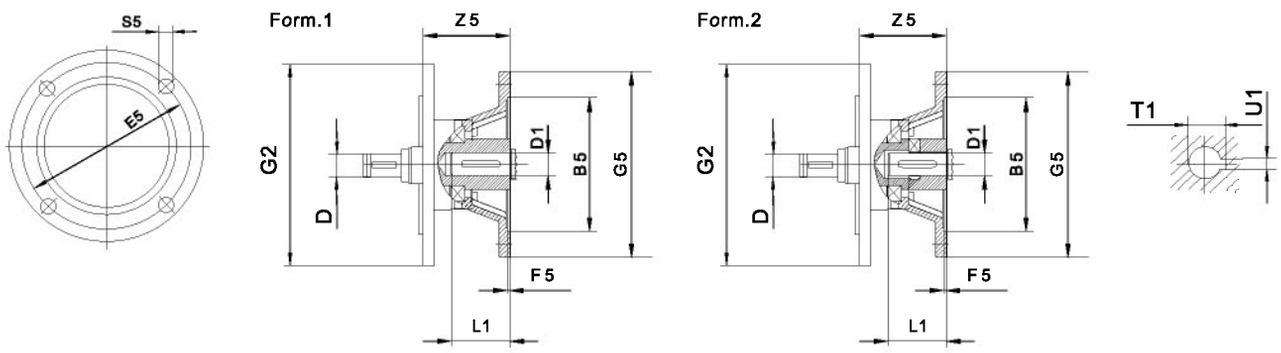

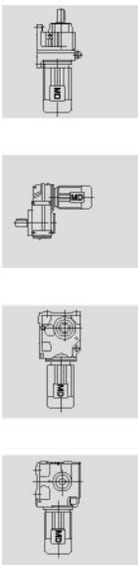

Wielkość przekładni *gear unit size*	Typ adaptera *adapter type*	Form	B5	D	E5	F5	G2	G5	S5	Z5	D1	L1	T1	U1
MDR..27, MDR..37 MDF..37, MDF..47 MDK..37 MDS..37, MDS..47, MDS..57	AM63	1	95G7	10n6	115	4.5	120	140	M8	72	11F7	23	12.8	4
	AM71[1]		110G7		130			160		92.5	14F7	30	16.3	5
	AM80[1]		130G7	12n6	165			200	M10	118	19F7	40	21.8	6
	AM90[1]			14n6							24F7	50	27.3	8
MDR..47[2], MDR..57, MDR..67 MDF..57, MDF..67 MDK..47[2], MDK..57, MDK..67 MDS..67	AM63	1	95G7	10n6	115	4.5	160	140	M8	66	11F7	23	12.8	4
	AM71		110G7		130			160		87	14F7	30	16.3	5
	AM80		130G7	12n6	165			200	M10	113	19F7	40	21.8	6
	AM90			14n6							24F7	50	27.3	8
	AM100[1]	2	180G7	16n6	215	5		250	M12	144	28H7	60	31.3	8
	AM112[1]			18n6										
	AM132[1]		230G7	22n6	265			300		177	38H7	80	41.3	10
MDR..77 MDF..77 MDK..77 MDS..77	AM63	1	95G7	10n6	115	4.5	200	140	M8	60	11F7	23	12.8	4
	AM71		110G7		130			160			14F7	30	16.3	5
	AM80		130G7	12n6	165			200	M10	92	19F7	40	21.8	6
	AM90			14n6							24F7	50	27.3	8
	AM100[1]	2	180G7	16n6	215	5		250	M12	136	28H7	60	31.3	8
	AM112[1]			18n6										
	AM132S[1] AM132M[1]		230G7	22n6	265			300		196	38H7	80	41.3	10
	AM132ML[1]			28n6										
MDR..87 MDF..87 MDK..87 MDS..87[3]	AM80	1	130G7	12n6	165	4.5	250	200	M10	100	19F7	40	21.8	6
	AM90			14n6							24F7	50	27.3	8
	AM100	2	180G7	16n6	215	5		250	M12	131	28H7	60	31.3	8
	AM112			18n6										
	AM132S AM132M		230G7	22n6	265			300		191	38H7	80	41.3	10
	AM132ML			28n6										
	AM160[1]		250G7	28n6	300	6		350	M16	236	42H7	110	45.3	12
	AM180[1]			32n6							48H7		51.8	14

1) Obrys zewnętrzny kołnierza może wystawać poza płaszczyznę montażu łap (porównać średnicę kołnierza ze wzniosem wału).
Dimension G5/2 may protrude past foot mounting surface if mounted on a foot-mounted gear unit, please check.
2) Max. AM100
3) Bez AM180
Without AM180

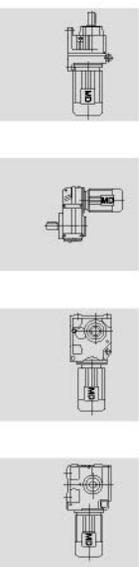

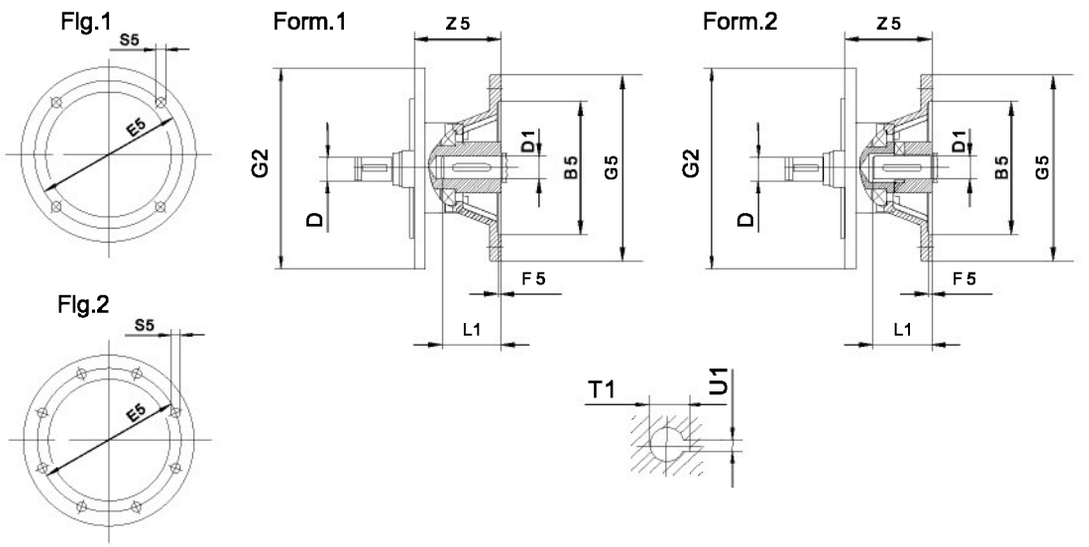

Wlk przekładni *gear unit size*	Typ adaptera *adapter type*	Flg	Form	B5	D	E5	F5	G2	G5	S5	Z5	D1	L1	T1	U1
MDR..97 MDF..97 MDK..97 MDS..97[2]	AM100	1	2	180 G7	16n6	215	5	300	250	M12	126	28H7	60	31.3	8
	AM112				18n6										
	AM132S			230 G7	22n6	265			300		186	38H7	80	41.3	10
	AM132M														
	AM132ML				28n6										
	AM160			250 G7	28n6	300	6		350	M16	231	42H7	110	45.3	12
	AM180				32n6							48H7		51.8	14
	AM200		1	300 G7	38n6	350	7		400		268	55F7		59.3	16
	AM225[1]	2	2	350 G7	38n6	400	6		450		303	60H7	140	64.4	18
MDR..107 MDF..107 MDK..107	AM100	1	2	180 G7	16n6	215	5	350	250	M12	120	28H7	60	31.3	8
	AM112				18n6										
	AM132S			230 G7	22n6	265			300		180	38H7	80	41.3	10
	AM132M														
	AM132ML				28n6										
	AM160			250 G7	28n6	300	6		350	M16	225	42H7	110	45.3	12
	AM180				32n6							48H7		51.8	14
	AM200		1	300 G7	38n6	350	7		400		262	55F7		59.3	16
	AM225	2	2	350 G7	38n6	400	6		450		297	60H7	140	64.4	18
MDR..137	AM132S	1	2	230 G7	22n6	265	5	400	300	M12	173	38H7	80	41.3	10
	AM132M														
	AM132ML				28n6										
	AM160			250 G7	28n6	300	6		350	M16	218	42H7	110	45.3	12
	AM180				32n6							48H7		51.8	14
	AM200		1	300 G7	38n6	350	7		400		255	55F7		59.3	16
	AM225	2	2	350 G7	38n6	400	6		450		290	60H7	140	64.4	18

1) Obrys zewnętrzny kołnierza może wystawać poza płaszczyznę montażu łap (porównać średnicę kołnierza ze wzniosem wału).
Dimension G5/2 may protrude past foot mounting surface if mounted on a foot-mounted gear unit, please check.
2) Bez AM200
Without AM200

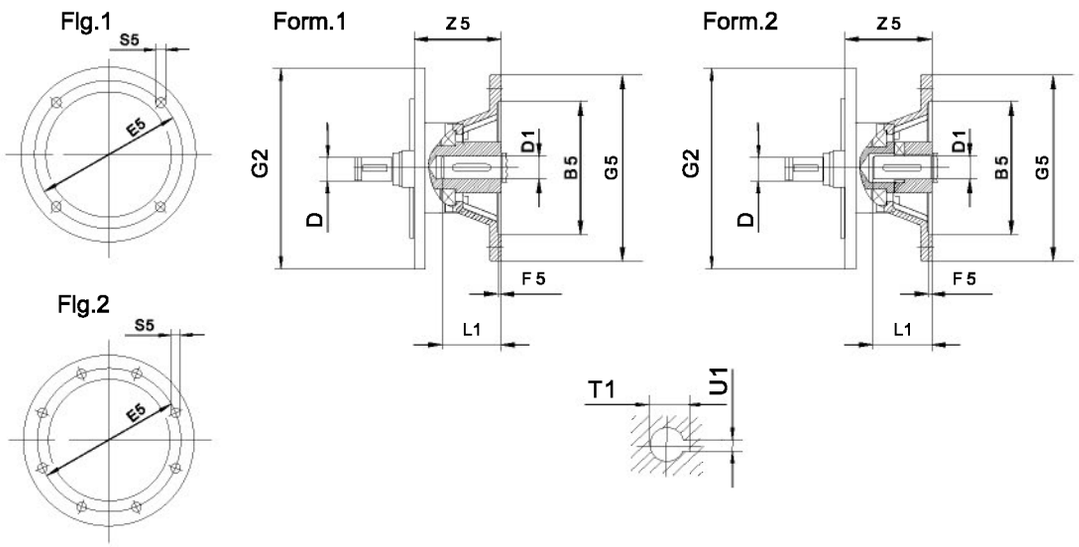

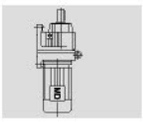
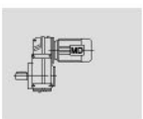
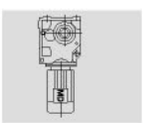
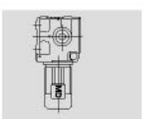

Wlk przekładni *gear unit size*	Typ adaptera *adapter type*	Flg	Form	B5	D	E5	F5	G2	G5	S5	Z5	D1	L1	T1	U1
MDR..147 MDF..127 MDK..127	AM132S	1	2	230G7	22n6	265	5	450	300	M12	165	38H7	80	41.3	10
	AM132M														
	AM132ML				28n6										
	AM160			250G7	28n6	300	6		350	M16	210	42H7	110	45.3	12
	AM180				32n6							48H7		51.8	14
	AM200		1	300G7	38n6	350	7		400		247	55F7		59.3	16
	AM225	2	2	350G7	38n6	400			450		282	60H7	140	64.4	18
	AM250			450G7	48n6	500			550		336	65H7		69.4	
	AM280											75H7		79.9	20
MDR..167 MDF..157 MDK..157 MDK..167 MDK..187	AM132	1	2	230G7	22n6	265	5	550	300	M12	165	38H7	80	41.3	10
	AM160			250G7	28n6	300	6		350	M16	202	42H7	110	45.3	12
	AM180				32n6							48H7		51.8	14
	AM200		1	300G7	38n6	350	7		400		239	55F7		59.3	16
	AM225	2	2	350G7	38n6	400			450		274	60H7	140	64.4	18
	AM250			450G7	48n6	500			550		328	65H7		69.4	
	AM280											75H7		79.9	20

9.5. Adaptery do montażu serwomotorów

9.5. Adapters for mounting servomotors

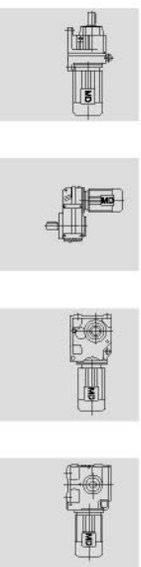

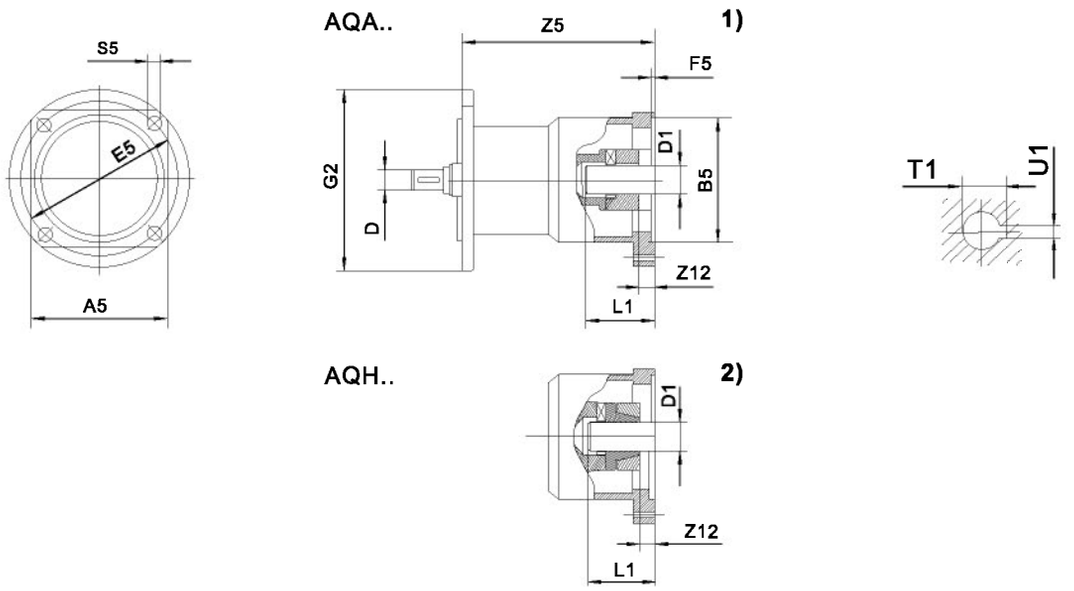

Wlk przekładni *gear unit size*	Typ adaptera *adapter type*	A5	B5	D	E5	F5	G2	S5	Z5	Z12[1)]	Z12[2)]	D1	L1	T1[1)]	U1[1)]
MDR..27 MDR..37 MDF..37 MDF..47 MDK..37 MDS..37 MDS..47 MDS..57	AQ..80/1	82	60G7	10n6	75	3	120	M5	104.5	3	3	11F7	23	12.8	4
	AQ..80/2			12n6								14F7	30	16.3	5
	AQ..80/3		50G7		95			M6							
	AQ..100/1	100	80G7	10n6 12n6 14n6 16n6	100	4		M6	129.5	4	4	14F7	30	16.3	5
	AQ..100/2		95G7		115			M8							
	AQ..100/3		80G7		100			M6	143.5			19F7	40	21.8	6
	AQ..100/4		95G7		115			M8							
	AQ..115/1	115	95G7		130			M8	152.5			19F7	40	21.8	6
	AQ..115/2		110G7												
	AQ..115/3											24F7	50	27.3	8
MDR..47 MDR..57 MDR..67 MDF..57 MDF..67 MDK..47 MDK..57 MDK..67 MDS..67	AQ..80/1	82	60G7	10n6	75	3	160	M5	98	3	3	11F7	23	12.8	4
	AQ..80/2			12n6								14F7	30	16.3	5
	AQ..80/3		50G7		95			M6							
	AQ..100/1	100	80G7	10n6 12n6 14n6 16n6	100	4		M6	122.5	4	4	14F7	30	16.3	5
	AQ..100/2		95G7		115			M8							
	AQ..100/3		80G7		100			M6	136.5			19F7	40	21.8	6
	AQ..100/4		95G7		115			M8							
	AQ..115/1	115	95G7		130			M8	145.5			19F7	40	21.8	6
	AQ..115/2		110G7												
	AQ..115/3											24F7	50	27.3	8
	AQ..140/1	140	110G7	16n6	165	5		M10	175	5	5	24F7	50	27.3	8
	AQ..140/2		130G7	18n6											
	AQ..140/3			22n6					188			32F7	60	35.5	10

1) Dotyczy jedynie wersji z wpustem (AQA)
Applies to type with keyway (AQA)
2) Dotyczy jedynie wersji z piastą pierścienia zaciskowego (AQH)
Applies to type with clamping ring hub (AQH)

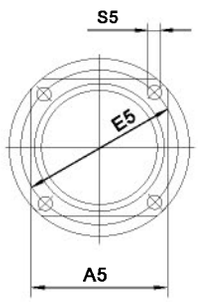

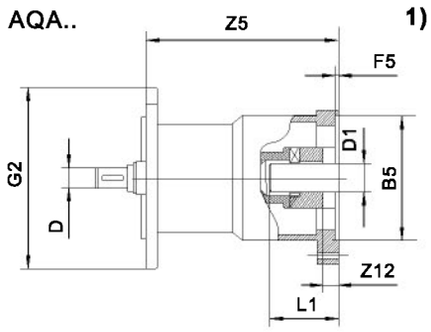

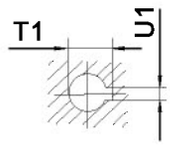

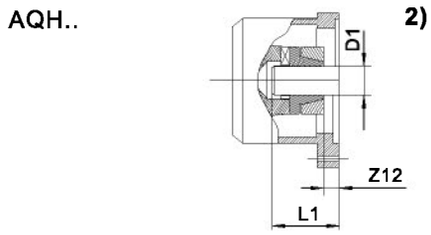

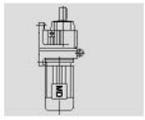

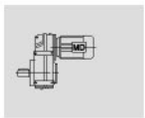

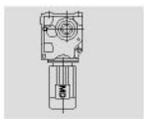

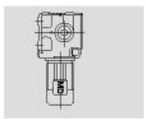

Wlk przekładni *gear unit size*	Typ adaptera *adapter type*	A5	B5	D	E5	F5	G2	S5	Z5	Z12[1)]	Z12[2)]	D1	L1	T1[1)]	U1[1)]
MDR..77 MDF..77 MDK..77 MDS..77	AQ..80/1	82	60G7	10n6 12n6	75	3	200	M5	92	3	3	11F7	23	12.8	4
	AQ..80/2				75							14F7	30	16.3	5
	AQ..80/3		50G7		95			M6							
	AQ..100/1	100	80G7	10n6 12n6 14n6 16n6	100	4		M6	115.5	4	4	14F7	30	16.3	5
	AQ..100/2		95G7		115			M8							
	AQ..100/3		80G7		100			M6	129.5			19F7	40	21.8	6
	AQ..100/4		95G7		115			M8							
	AQ..115/1	115	95G7		130			M8	138.5			19F7	40	21.8	6
	AQ..115/2		110G7												
	AQ..115/3											24F7	50	27.3	8
	AQ..140/1	140	110G7	16n6 18n6 22n6	165	5		M10	167	5	5	24F7	50	27.3	8
	AQ..140/2		130G7												
	AQ..140/3								180			32F7	60	35.3	10
	AQ..190/1	190	130G7	22n6 28n6	215			M12	225.5			32F7	60	35.3	10
	AQ..190/2		180G7												
	AQ..190/3								249.5			38F7	80	41.3	10
MDR..87 MDF..87 MDK..87 MDS..87	AQ..100/1	100	80G7	12n6 14n6 16n6	100	4	250	M6	110.5	4	4	14F7	30	16.3	5
	AQ..100/2		95G7		115			M8							
	AQ..100/3		80G7		100			M6	124.5			19F7	40	21.8	6
	AQ..100/4		95G7		115			M8							
	AQ..115/1	115	95G7		130			M8	133.5			19F7	40	21.8	6
	AQ..115/2		110G7												
	AQ..115/3											24F7	50	27.3	8
	AQ..140/1	140	110G7	16n6	165	5		M10	162	5	5	24F7	50	27.3	8
	AQ..140/2		130G7	18n6											
	AQ..140/3			22n6					175			32F7	60	35.3	10
	AQ..190/1	190	130G7	22n6 28n6	215			M12	220.5			32F7	60	35.3	10
	AQ..190/2		180G7												
	AQ..190/3								244.5			38F7	80	41.3	10

1) Dotyczy jedynie wersji z wpustem (AQA)
Applies to type with keyway (AQA)
2) Dotyczy jedynie wersji z piastą pierścienia zaciskowego (AQH)
Applies to type with clamping ring hub (AQH)

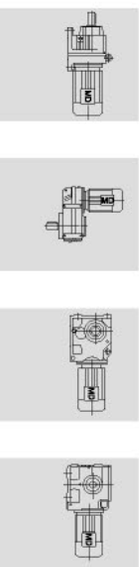

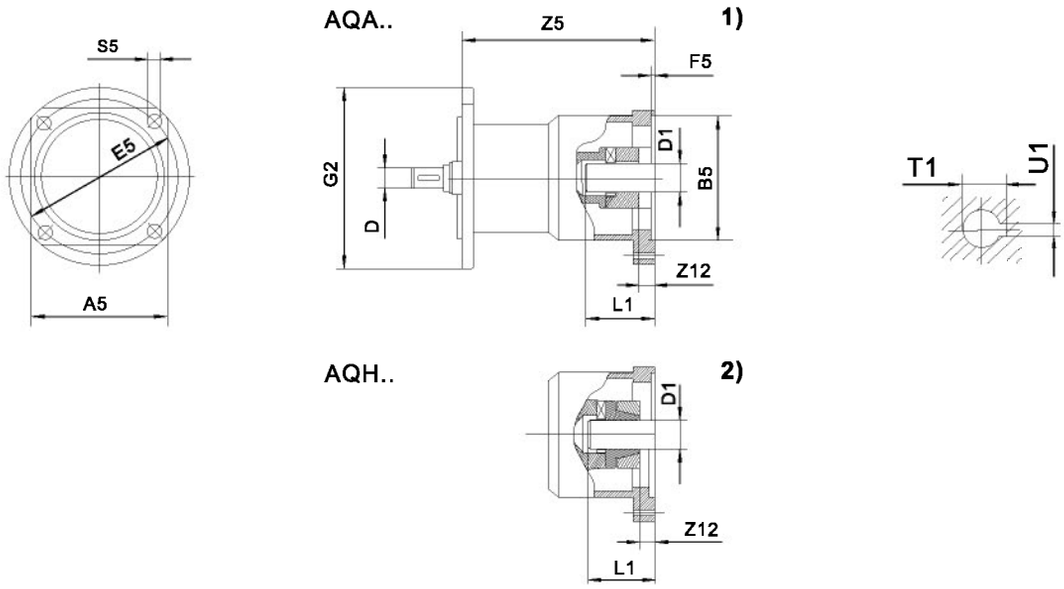

Wlk przekładni *gear unit size*	Typ adaptera *adapter type*	A5	B5	D	E5	F5	G2	S5	Z5	Z12[1)]	Z12[2)]	D1	L1	T1	U1
MDR..97 MDF..97 MDK..97 MDS..97	AQ..140/1	140	110G7	16n6 18n6 22n6	165	5	300	M10	157	5	5	24F7	50	27.3	8
	AQ..140/2		130G7												
	AQ..140/3								170			32F7	60	35.3	10
	AQ..190/1	190	130G7	22n6 28n6	215			M12	215.5			32F7	60	35.3	10
	AQ..190/2		180G7												
	AQ..190/3								239.5			38F7	80	41.3	
MDR..107 MDF..107 MDK..107	AQ..140/1	140	110G7	16n6 18n6 22n6	165		350	M10	151			24F7	50	27.3	8
	AQ..140/2		130G7												
	AQ..140/3								164			32F7	60	35.3	10
	AQ..190/1	190	130G7	22n6 28n6	215			M12	209.5			32F7	60	35.3	10
	AQ..190/2		180G7												
	AQ..190/3								233.5			38F7	80	41.3	
MDR..137	AQ..190/1	190	130G7	22n6 28n6	215		400	M12	202.5			32F7	60	35.3	10
	AQ..190/2		180G7												
	AQ..190/3								226.5			38F7	80	41.3	
MDR..147 MDF..127 MDK..127	AQ..190/1		130G7	22n6 28n6			450		194.5			32F7	60	35.3	
	AQ..190/2		180G7												
	AQ..190/3								218.5			38F7	80	41.3	

1) Dotyczy jedynie wersji z wpustem (AQA)
Applies to type with keyway (AQA)
2) Dotyczy jedynie wersji z piastą pierścienia zaciskowego (AQH)
Applies to type with clamping ring hub (AQH)

9.6. Wymiary silników
9.6. Size of motors


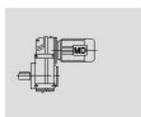
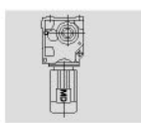
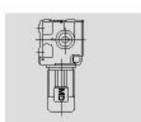

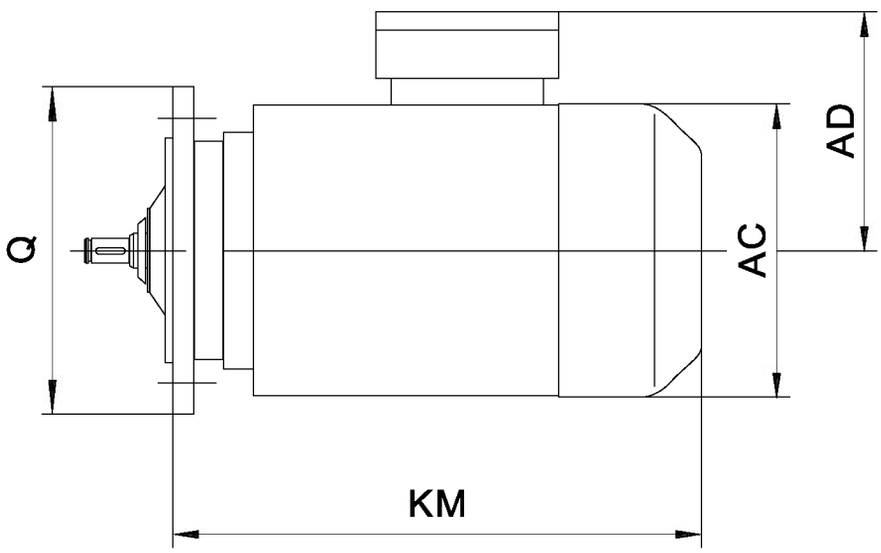

Wielkość silnika *motor size*	Q mm	KM mm	L1[1] mm	L2[2] mm	L3[3] mm	AD mm	AC mm
DS63	120	198	258	259	336	109	120
	160	192	252	252	330		
DS71	120	229	298	309	350	128	135
	160	222	282	302	343		
	200	215	275	295	336		
DP80 DE80 DS80	120	269	341	354	397	138	156
	160	262	334	347	390		
	200	255	327	340	383		
	250	250	322	335	378		
DP90 DE90 DS90	120	291	369	386	418	149	175
	160	284	362	379	411		

Wielkość silnika *motor size*	Q mm	KM mm	L1[1] mm	L2[2] mm	L3[3] mm	AD mm	AC mm
DP90 DE90 DS90	200	277	355	372	404	149	175
	250	272	350	367	399		
	300	267	345	362	394		
DP100 DE100 DS100	120	353	431	448	480	157	189
	160	344	422	439	471		
	200	337	415	432	464		
	250	332	410	427	459		
	300	327	405	422	454		
	350	321	399	416	448		
DP112 DE112 DS112	160	392	480	481	533	171	221
	200	383	471	472	524		

1) L1 jest to wartość KM dla silnika z hamulcem
L1 is the KM value for motor with brake
2) L2 jest to wartość KM dla silnika z obcym chłodzeniem
L2 is the KM value for motor with forced cooling fan
3) L3 jest to wartość KM dla silnika z obcym chłodzeniem i hamulcem
L3 is the KM value for motor with forced cooling fan and brake
W przypadku innych, specjalnych wymagań, prosimy o kontakt.
If you have any special requrements, please contact us.

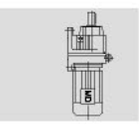
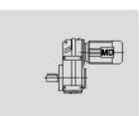
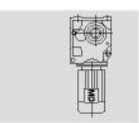
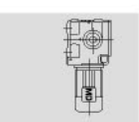

Wielkość silnika *motor size*	Q mm	KM mm	L1[1] mm	L2[2] mm	L3[3] mm	AD mm	AC mm
DP112	250	378	466	467	519	171	221
DE112	300	373	461	462	514		
DS112	350	367	455	456	508		
DP132S DE132S DS132S	160	392	480	481	533	171	221
	200	383	471	472	524		
	250	378	466	467	519		
	300	373	461	462	514		
	350	367	455	456	508		
	400	360	448	449	501		
DP132M DE132M DS132M	200	433	521	522	574	171	221
	250	428	516	517	569		
	300	423	511	512	564		
	350	417	505	506	558		
	400	410	498	499	551		
	450	402	490	491	543		
DP160 DE160 DS160	200	471	581	538	661	228	271
	250	466	576	533	656		
	300	461	571	528	651		
	350	455	565	522	645		
	400	448	558	515	638		
	450	440	550	507	630		
	550	432	542	499	622		
DP180M DE180M DS180M	250	617	737	652	772	280	380
	300	612	732	647	767		
	350	606	726	641	761		
	400	599	719	634	754		
	450	591	711	626	746		
	550	583	703	618	738		

Wielkość silnika *motor size*	Q mm	KM mm	L1[1] mm	L2[2] mm	L3[3] mm	AD mm	AC mm
DP180L DE180L DS180L	250	665	785	700	820	314	420
	300	660	780	695	815		
	350	654	774	689	809		
	400	647	767	682	802		
	450	639	759	674	794		
	550	631	751	666	786		
DP200L DE200L DS200L	300	666	798	711	843	335	470
	350	660	792	705	837		
	400	653	785	698	830		
	450	645	777	690	822		
	550	637	769	682	814		
DP225S DE225S DS225S	300	686	856	736	906	335	470
	350	680	850	730	900		
	400	673	843	723	893		
	450	665	835	715	885		
	550	657	827	707	877		
DP225M DE225M DS225M	300	711	881	761	931	335	470
	350	705	875	755	925		
	400	698	868	748	918		
	450	690	860	740	910		
	550	682	852	732	902		
D250M	400	793	946	839	992	370	510
	450	785	938	831	984		
	550	777	930	823	976		
D280	400	905	1061	950	1108	408	580
	450	897	1053	942	1098		
	550	889	1045	934	1090		
D315	660	1130	1286	1175	1331	530	635

1) L1 jest to wartość KM dla silnika z hamulcem
L1 is the KM value for motor with brake
2) L2 jest to wartość KM dla silnika z obcym chłodzeniem
L2 is the KM value for motor with forced cooling fan
3) L3 jest to wartość KM dla silnika z obcym chłodzeniem i hamulcem
L3 is the KM value for motor with forced cooling fan and brake

W przypadku innych, specjalnych wymagań, prosimy o kontakt.
If you have any special requrements, please contact us.

9.7. Wymiary kołnierzowe motoreduktorów serii MDRF.. i MDR..F

9.7. Flange dimensions of MDRF.. and MDR..F gear units

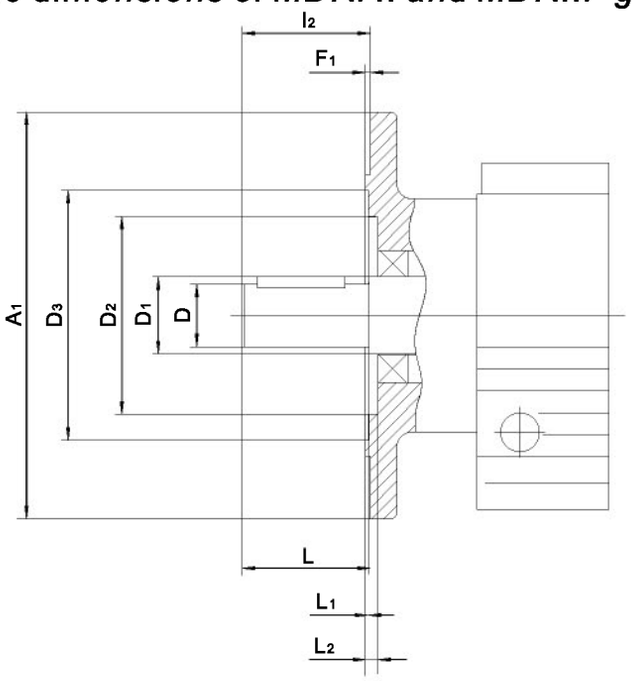

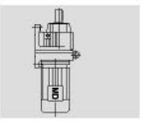

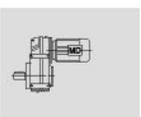

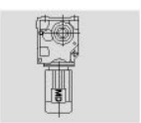

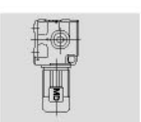

Należy sprawdzić wymiary L1 i L2 podczas wyboru i montażu elementów wyjściowych.
Please check dimensions L1 and L2 for selection and installation of output elements.

规格 Type	A1	D	D1	D2		D3	F1	I2	L	L1		L2
				RF	R..F					RF	R..F	
MDRF17, MDR17F	120	20	25	46	46	65	3	40	40	1	1	5
	140				-	78	3			1	-	5
MDRF27, MDR27F	120	25	30	54	54	66	3	50	50	1	1	6
	140				-	79	3			3	-	7
	160				-	92	3.5			3	-	7
MDRF37, MDR37F	120	25	35	60	63	70	3	50	50	5	4	7
	160				-	96	3.5			1	-	7.5
	200				-	119	3.5			1	-	7.5
MDRF47, MDR47F	140	30	35	72	64	82	3	60	60	4	1	6
	160				-	96	3.5			0.5	-	6.5
	200				-	116	3.5			0.5	-	6.5
MDRF57, MDR57F	160	35	40	76	75	96	3.5	70	70	4	2.5	5
	200				-	116	3.5			0	-	5
	250				-	160	4			0.5	-	5.5
MDRF67, MDR67F	200	35	50	90	90	118	3.5	70	70	2	4	7
	250				-	160	4			1	-	7.5
MDRF77, MDR77F	250	40	52	112	100	160	4	80	80	0.5	2.5	7
	300				-	210	4			0.5	-	7
MDRF87, MDR87F	300	50	62	123	122	210	4	100	100	0	1.5	8
	350				-	226	5			1	-	9
MDRF97	350	60	72	136		236	5	120	120	0		9
	450					320						
MDRF107	350	70	82	157		232	5	140	140	0		11
	450			186		316						
MDRF137	450	90	108	180		316	5	170	170	0		10
	550					416						
MDRF147	450	110	125	210		316	5	210	210	0		10
	550					416						
MDRF167	550	120	145	290		416	5	210	210	1		10
	660					517	6			2		11

9.8. Mocowanie przekładni
9.8. Gear unit mounting

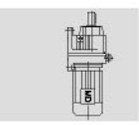

Do mocowania motoreduktorów należy w każdym przypadku używać śrub klasy 8.8.
Always use 8.8-quality bolts for mounting gear units and geared motors.

Wyjątek
Exception

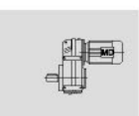

W przypadku poniższych przekładni i motoreduktorów z podanymi kołnierzami, należy użyć śrub co najmniej klasy 10.9:

- MDRF37, MDR37F z kołnierzem Φ120mm
- MDRF47, MDR47F z kołnierzem Φ140mm
- MDRF57, MDR57F z kołnierzem Φ160mm

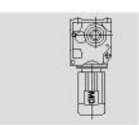

Bolts of quality 10.9 must be used for fastening a flange to the customer-supplied unit in order to transmit the rated torque specified in this catalog. These bolts must be used in case of the following flange - mounted helical geared motors (MDRF..) and foot/flange-mounted helical geared motors (MDR..F):

- *MDRF37, MDR37F with flange Φ120mm*
- *MDRF47, MDR47F with flange Φ140mm*
- *MDRF57, MDR57F with flange Φ160mm*

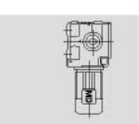

Ramię reakcyjne dla MDKH167..~187..
Torque arm for MDKH167..~187..

Do motoreduktorów o wielkościach MDKH167.. i MDKH187.. nie są standardowo dostępne ramiona reakcyjne. Prosimy o kontakt z naszą firmą, jeśli potrzebne są ramiona reakcyjne do wymienionych motoreduktorów. Nasz dział techniczny przygotuje propozycje dotyczące konfiguracji.

As a standard, there are no torque arms available for gear units of size MDKH167.. and MDKH187.. Please contact our company if you require torque arms for these gear units. You will recieve configuration suggestions.

9.9. Środki smarne
9.9. Lubricants

Uwagi ogólne
General information

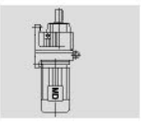
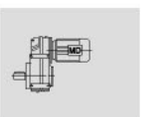
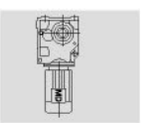
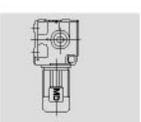

Jeżeli nie uzgodniono inaczej przy zamówieniu, MegaDrive dostarcza przekładnie napełnione środkiem smarnym w ilości odpowiedniej dla danej pozycji pracy podanej podczas składania zamówienia. W przypadku późniejszej zmiany pozycji pracy, należy dostosować ilość oleju po uprzedniej konsultacji z MegaDrive, w przeciwnym razie wygasa odpowiedzialność za wady.

Unless there is a special requirement, MegaDrive. supplies the drives with a lubricant fill adapted for the specific gear mounting position. This is based on the specification of the mounting position in the drive order. If the mounting position is changed, the lubricant fill quantity must be adapted accordingly. Consequently, a change to the mounting position can only occur following consultation with MegaDrive, otherwise your right to claim under warranty no longer applies.

Klasy lepkości olejów
Lubricants standards and viscosity

Standardowo stosowane oleje wraz z ich odpowiednikami zostały podane w tabeli na następnej stronie. Używane są oleje o następujących klasach lepkości:
The table on the next page contains standard used lubricants in gear units. Lubricants with the following quality and viscosity are used as standard:

Standardowy olej *Standard lubricant*	Klasa lepkości *ISO viscosity class*	Temp. otoczenia [°C] *Ambient temperature [°C]*	Rodzaj przekładni *Gear unit type*
Olej mineralny CLP *Mineral oil CLP*	ISO VG 220	-15 ~ +40	Serie *(series):* MDR/MDF/MDK
Olej syntetyczny CLP *Synthetic oil CLP*	ISO VG 320	-20 ~ +40	Seria *(serie):* MDS

W szczególnych przypadkach (długotrwałe przechowywanie, szczególne warunki pracy etc.), należy koniecznie użyć innych olejów. Dostępne na życzenie są również oleje biodegradowalne oraz dopuszczone do kontaktu z żywnością.

In special situations (long-term storage, special working conditions etc.), the special lubricate oil must be used. Biology decompose oil and oil for food industry are available for request.

Specjalny olej *Special lubricant*	Klasa lepkości *ISO viscosity class*	Temp. otoczenia [°C] *Ambient temperature [°C]*	Rodzaj przekładni *Gear unit type*
Olej syntetyczny CLP *Synthetic oil CLP*	ISO VG 150	-40 ~ +40	Serie *(series):* MDR/MDF/MDK
Olej syntetyczny CLP *Synthetic oil CLP*	ISO VG 220	-10 ~ +40	Serie *(series):* MDR/MDF/MDK
Olej syntetyczny CLP *Synthetic oil CLP*	ISO VG 460	0 ~ +80	Seria *(serie):* MDS

Smary do łożysk tocznych
Anti-friction bearing greases

Smary do łożysk tocznych *Greases to roller bearings*	Temp. otoczenia [°C] *Ambient temperature [°C]*	Rodzaj przekładni *Gear unit type*
Mineralny smar do łożysk tocznych K3N/K2K *Mineral rolling bearing grease K3N/K2K*	-30 ~ +60	Wersja standardowa: przekładnie i silniki *Standard type: gear units and motors*
Syntetyczny smar do łożysk tocznych K HC 2R-40 *Synthetic rolling bearing grease K HC 2R-40*	-40 ~ +80	Przekładnie z syntetycznym środkiem smarnym *Gear units with synthetic lubricant*
Mineralny smar do łożysk tocznych K3N-30 *Mineral rolling bearing grease K3N-30*	-25 ~ +80	Wersja specjalna: silniki w zależności od zastosowania *Special type: motors depending on application*
Syntetyczny smar do łożysk tocznych K2S-50 *Synthetic rolling bearing grease K2S-50*	-45 ~ -25	Wersja specjalna: silniki w zależności od zastosowania *Special type: motors depending on application*

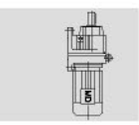
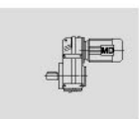
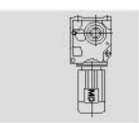
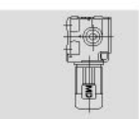

Tabela zalecanych olejów
Lubricant table

Typ przekładni *(Gear unit type)*	Zakres temperatury otoczenia *(Ambient temperature range)* -40 -20 0°C +20 +40 +60 +80 +100	Rodzaj oleju *Oil type* / Klasa lepkości *ISO viscosity class*	Shell	LOTOS
MDR MDF MDK	-15 … +40	mineralny *mineral* / VG220	SHELL OMALA 220 S2 GX	TRANSMIL SP 200
MDR MDF MDK	-20 … +60	syntetyczny PAO *synthetic PAO* / VG220	SHELL OMALA 220 S4 GXV	TRANSMIL Synthetic 220
MDR MDF MDK	-40 … +40	syntetyczny PAO *synthetic PAO* / VG150	SHELL OMALA 150 S4 GXV	TRANSMIL Synthetic 150
MDR MDF MDK	-10 … +80	syntetyczny PAG *synthetic PAG* / VG320	SHELL OMALA 320 S4 WE	TRANSMIL Synthetic 320
MDS	-20 … +40	syntetyczny PAG *synthetic PAG* / VG320	SHELL OMALA 320 S4 WE	-
MDS	0 … +80	syntetyczny PAG *synthetic PAG* / VG460	SHELL OMALA 460 S4 WE	-

Dopuszcza się zastosowanie olejów odpowiedników innych producentów, niż podane w tabeli powyżej, przy zachowaniu porównywalnych własności.

The use of alternative oil from another manufacturer is allowed on condition that comparable properties are the same.

Ilości środków smarnych
Lubricant fill quantities

Tabele środków smarnych mają charakter orientacyjny i są uzależnione od ilości stopni oraz przełożenia. Podczas napełniania przekładni należy koniecznie zwracać uwagę na korek poziomu oleju (wziernik) jako wskaźnik dokładnej ilości oleju. Poniższe tabele przedstawiają wartości ilości oleju zależne od pozycji pracy M1~M6.

The specified fill quantities are only given as a guideline. The precise values vary depeding on the number of stages and gear ratio. When filling, it is essential to check the oil level plug since it indicates the precise oil volume. The following tables show referenced values for lubricant fill quantities in relation to the mounting position M1~M6.

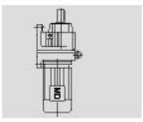

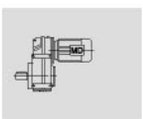

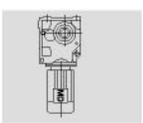

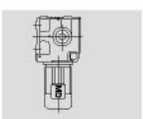

Przekładnie zębate walcowe (MDR)
Helical gear units (MDR)

MDR.., MDRF..

Typ przekładni *(Gear unit type)*	Ilość oleju w litrach *(fill quantity in liters)*					
	M1[1)]	M2[1)]	M3	M4	M5	M6
MDR17/R17F	0.25	0.6	0.35	0.6	0.35	0.35
MDR27/R27F	0.25/0.4	0.7	0.4	0.7	0.4	0.4
MDR37/R37F	0.3/1	0.9	1	1.1	0.8	1
MDR47/R47F	0.7/1.5	1.6	1.5	1.7	1.5	1.5
MDR57/R57F	0.8/1.7	1.9	1.7	2.1	1.7	1.7
MDR67/R67F	1.1/2.3	2.6/3.5	2.8	3.2	1.8	2
MDR77/R77F	1.2/3	3.8/4.3	3.6	4.3	2.5	3.4
MDR87/R87F	2.3/6	6.7/8.4	7.2	7.7	6.3	6.5
MDR97	4.6/9.8	11.7/14	11.7	13.4	11.3	11.7
MDR107	6/13.7	16.3	16.9	19.2	13.2	15.9
MDR137	10/25	28	29.5	31.5	25	25
MDR147	15.4/40	46.5	48	52	39.5	41
MDR167	27/70	82	78	88	66	69

1) W przypadku przekładni podwójnych, większa z podanych wartości odnosi się do dużej przekładni.
In the case of double gear units, larger gear unit must be filled with greater oil volume.

MDRF..

Typ przekładni *(Gear unit type)*	Ilość oleju w litrach *(fill quantity in liters)*					
	M1[1)]	M2[1)]	M3	M4	M5	M6
MDRF17	0.25	0.6	0.35	0.6	0.35	0.35
MDRF27	0.25/0.4	0.7	0.4	0.7	0.4	0.4
MDRF37	0.4/1	0.9	1	1.1	0.8	1
MDRF47	0.7/1.5	1.6	1.5	1.7	1.5	1.5
MDRF57	0.8/1.7	1.8	1.7	2.0	1.7	1.7
MDRF67	1.2/2.5	2.7/3.6	2.7	3.1	1.9	2.1
MDRF77	1.2/2.6	3.8/4.1	3.3	4.1	2.4	3
MDRF87	2.4/6	6.8/7.9	7.1	7.7	6.3	6.4
MDRF97	5.1/10.2	11.9/14	11.2	14	11.2	11.8
MDRF107	6.3/14.9	15.9	17	19.2	13.1	15.9
MDRF137	9.5/25	27	29	32.5	25	25
MDRF147	16.4/42	47	48	52	42	42
MDRF167	26/70	82	78	88	65	71

1) W przypadku przekładni podwójnych, większa z podanych wartości odnosi się do dużej przekładni.
In the case of double gear units, larger gear unit must be filled with greater oil volume.

MDRX..

Typ przekładni *(Gear unit type)*	Ilość oleju w litrach *(fill quantity in liters)*					
	M1	M2	M3	M4	M5	M6
MDRX57	0.6	0.8	1.3	1.3	0.9	0.9
MDRX67	0.8	0.8	1.7	1.9	1.1	1.1
MDRX77	1.1	1.5	2.6	2.7	1.6	1.6
MDRX87	1.7	2.5	4.8	4.8	2.9	2.9
MDRX97	2.1	3.4	7.4	7	4.8	4.8
MDRX107	3.9	5.6	11.6	11.9	7.7	7.7

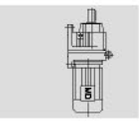

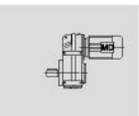

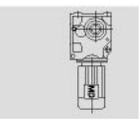

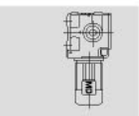

MDRXF..

Typ przekładni *(Gear unit type)*	Ilość oleju w litrach *(fill quantity in liters)*					
	M1	M2	M3	M4	M5	M6
MDRXF57	0.5	0.8	1.1	1.1	0.7	0.7
MDRXF67	0.7	0.8	1.5	1.7	1	1
MDRXF77	0.9	1.5	2.4	2.5	1.6	1.6
MDRXF87	1.6	2.5	4.9	4.7	2.9	2.9
MDRXF97	2.1	3.6	7.1	7	4.8	4.8
MDRXF107	3.1	5.9	11.2	10.5	7.2	7.2

Przekładnie płaskie (MDF)
Parallel shaft helical gear units (MDF)

MDF.., MDFA..B, MDFH..B, MDFV..B

Typ przekładni *(Gear unit type)*	Ilość oleju w litrach *(fill quantity in liters)*					
	M1	M2	M3	M4	M5	M6
MDF37	1	1.2	0.7	1.2	1	1.1
MDF47	1.5	1.8	1.1	1.9	1.5	1.7
MDF57	2.6	3.7	2.1	3.5	2.8	2.9
MDF67	2.7	3.8	1.9	3.8	2.9	3.2
MDF77	5	7.3	4.3	8	6	6.3
MDF87	10	13.0	7.7	13.8	10.8	11
MDF97	18.5	22.5	12.6	25.2	18.5	20
MDF107	24.5	32	19.5	37.5	27	27
MDF127	40.5	55	34	61	46.5	47
MDF157	69	104	63	105	86	78

MDFF..

Typ przekładni *(Gear unit type)*	Ilość oleju w litrach *(fill quantity in liters)*					
	M1	M2	M3	M4	M5	M6
MDFF37	1	1.2	0.7	1.3	1	1.1
MDFF47	1.6	1.9	1.1	1.9	1.5	1.7
MDFF57	2.8	3.8	2.1	3.7	2.9	3
MDFF67	2.7	3.8	1.9	3.8	2.9	3.2
MDFF77	5.1	7.3	4.3	8.1	6	6.3
MDFF87	10.3	13.2	7.8	14.1	11	11.2
MDFF97	19	22.5	12.6	25.5	18.9	20.5
MDFF107	25.5	32	19.5	38.5	27.5	28
MDFF127	41.5	56	34	63	46.5	49
MDFF157	72	105	64	106	87	79

MDFA.., MDFH.., MDFV.., MDFAF.., MDFHF.., MDFVF.., MDFAZ.., MDFHZ.., MDFVZ..

Typ przekładni *(Gear unit type)*	Ilość oleju w litrach *(fill quantity in liters)*					
	M1	M2	M3	M4	M5	M6
MDF..37	1	1.2	0.7	1.2	1	1.1
MDF..47	1.5	1.8	1.1	1.9	1.5	1.7
MDF..57	2.7	3.8	2.1	3.6	2.9	3
MDF..67	2.7	3.8	1.9	3.8	2.9	3.2
MDF..77	5	7.3	4.3	8	6	6.3
MDF..87	11	13.0	7.7	13.8	10.8	11
MDF..97	18.5	22.5	12.6	25.0	18.5	20
MDF..107	24.5	32	19.5	37.5	27	27
MDF..127	39	55	34	61	45	46.5
MDF..157	68	103	62	104	85	77

Przekładnie walcowo-stożkowe (MDK)
Helical-bevel gear units (MDK)

MDK.., MDKA..B, MDKH..B, MDKV..B

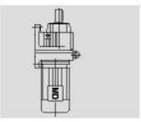
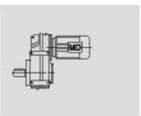
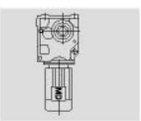
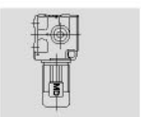

Typ przekładni *(Gear unit type)*	Ilość oleju w litrach *(fill quantity in liters)*					
	M1	M2	M3	M4	M5	M6
MDK37	0.5	1	1	1.3	1	1
MDK47	0.8	1.3	1.5	2	1.6	1.6
MDK57	1.2	2.3	2.5	3	2.6	2.4
MDK67	1.1	2.4	2.6	3.4	2.6	2.6
MDK77	2.2	4.1	4.4	5.2	4.2	4.4
MDK87	3.7	8	8.7	10.4	7.8	8
MDK97	7	14	15.7	20	15.7	15.5
MDK107	10	21	25.5	33.5	24	24
MDK127	21	41.5	44	51	40	41
MDK157	31	62	65	90	58	62
MDK167	35	100	100	125	85	85
MDK187	60	170	170	205	130	130

MDKF..

Typ przekładni *(Gear unit type)*	Ilość oleju w litrach *(fill quantity in liters)*					
	M1	M2	M3	M4	M5	M6
MDKF37	0.5	1.1	1.1	1.5	1	1
MDKF47	0.8	1.3	1.7	2.2	1.6	1.6
MDKF57	1.3	2.3	2.7	3	2.9	2.7
MDKF67	1.1	2.4	2.8	3.6	2.7	2.7
MDKF77	2.1	4.1	4.4	6	4.5	4.5
MDKF87	3.7	8.2	9	11.9	8.4	8.4
MDKF97	7	14.7	17.3	21.5	15.7	16.5
MDKF107	10	22	26	35	25	25
MDKF127	21	41.5	46	55	41	41
MDKF157	31	66	69	92	62	62

MDKA.., MDKH.., MDKV.., MDKAF.., MDKHF.., MDKVF.., MDKAZ.., MDKHZ.., MDKVZ..

Typ przekładni *(Gear unit type)*	Ilość oleju w litrach *(fill quantity in liters)*					
	M1	M2	M3	M4	M5	M6
MDK..37	0.5	1	1	1.4	1	1
MDK..47	0.8	1.3	1.6	2.1	1.6	1.6
MDK..57	1.3	2.3	2.7	3	2.9	2.7
MDK..67	1.1	2.4	2.7	3.6	2.6	2.6
MDK..77	2.1	4.1	4.6	6	4.4	4.4
MDK..87	3.7	8.2	8.8	11.1	8	8
MDK..97	7	14.7	15.7	20	15.7	15.7
MDK..107	10	20.5	24	32	24	24
MDK..127	21	41.5	43	51	40	40
MDK..157	31	66	67	87	62	62
MDK..167	35	100	100	125	85	85
MDK..187	60	170	170	205	130	130

Przekładnie walcowo-ślimakowe (MDS)
Helical-worm gear units (MDS)

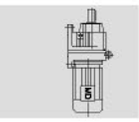

MDS..

Typ przekładni *(Gear unit type)*	Ilość oleju w litrach *(fill quantity in liters)*					
	M1	M2	M3[1)]	M4	M5	M6
MDS37	0.25	0.4	0.5	0.6	0.4	0.4
MDS47	0.35	0.8	0.7	1.1	0.8	0.8
MDS57	0.5	1.2	1	1.5	1.3	1.3
MDS67	1	2.0	2.2/3.1	3.2	2.6	2.6
MDS77	1.9	4.2	3.7/5.4	6	4.4	4.4
MDS87	3.3	8.1	6.9/10.4	12	8.4	8.4
MDS97	6.8	15	13.4/18	22.5	17	17

1) W przypadku przekładni podwójnych, większa z podanych wartości odnosi się do dużej przekładni.
In the case of double gear units, larger gear unit must be filled with greater oil volume.

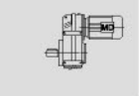

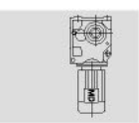

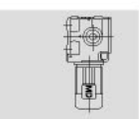

MDSF..

Typ przekładni *(Gear unit type)*	Ilość oleju w litrach *(fill quantity in liters)*					
	M1	M2	M3[1)]	M4	M5	M6
MDS37	0.25	0.4	0.5	0.6	0.4	0.4
MDS47	0.4	0.9	0.9	1.2	1.0	1
MDS57	0.5	1.2	1	1.6	1.4	1.4
MDS67	1	2.2	2.3/3	3.2	2.7	2.7
MDS77	1.9	4.1	3.9/5.8	6.5	4.9	4.9
MDS87	3.8	8	7.1/10.1	12	9.1	9.1
MDS97	7.4	15	13.8/18.8	23.6	18	18

1) W przypadku przekładni podwójnych, większa z podanych wartości odnosi się do dużej przekładni.
In the case of double gear units, larger gear unit must be filled with greater oil volume.

MDSA.., MDSH.., MDSAF.., MDSHF.., MDSAZ.., MDSHZ..

Typ przekładni *(Gear unit type)*	Ilość oleju w litrach *(fill quantity in liters)*					
	M1	M2	M3[1)]	M4	M5	M6
MDS..37	0.25	0.4	0.5	0.6	0.4	0.4
MDS..47	0.4	0.8	0.7	1.1	0.8	0.8
MDS..57	0.5	1.1	1	1.6	1.2	1.2
MDS..67	1	2	1.8/2.6	2.9	2.5	2.5
MDS..77	1.8	3.9	3.6/5	5.9	4.5	4.5
MDS..87	3.8	7.4	6/8.7	11.2	8	8
MDS..97	7	14	11.4/16	21	15.7	15.7

1) W przypadku przekładni podwójnych, większa z podanych wartości odnosi się do dużej przekładni.
In the case of double gear units, larger gear unit must be filled with greater oil volume.

10. Pozycje pracy
10. Mounting position

10.1. Oznaczenia pozycji pracy
10.1. Mounting position designations

MegaDrive rozróżnia sześć pozycji pracy (M1-M6). Poniższe rysunki przedstawiają możliwe pozycje pracy przekładni.

MegaDrive distinguishes six mounting position (M1-M6) for geared motors. The following illustrations show the possible mounting positions of the gear units.

Seria MDR
MDR series

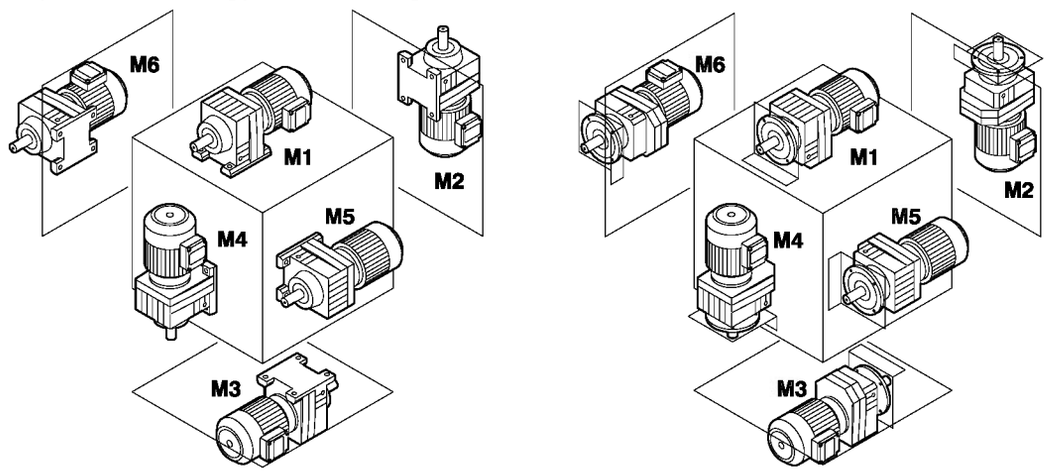

Seria MDF
MDF series

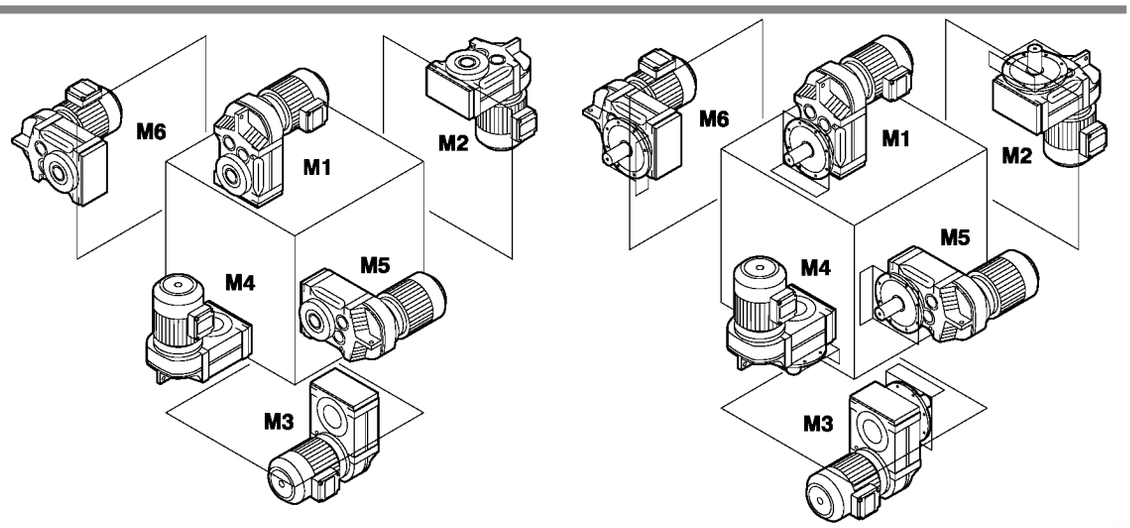

Serie MDK i MDS
MDK and MDS series

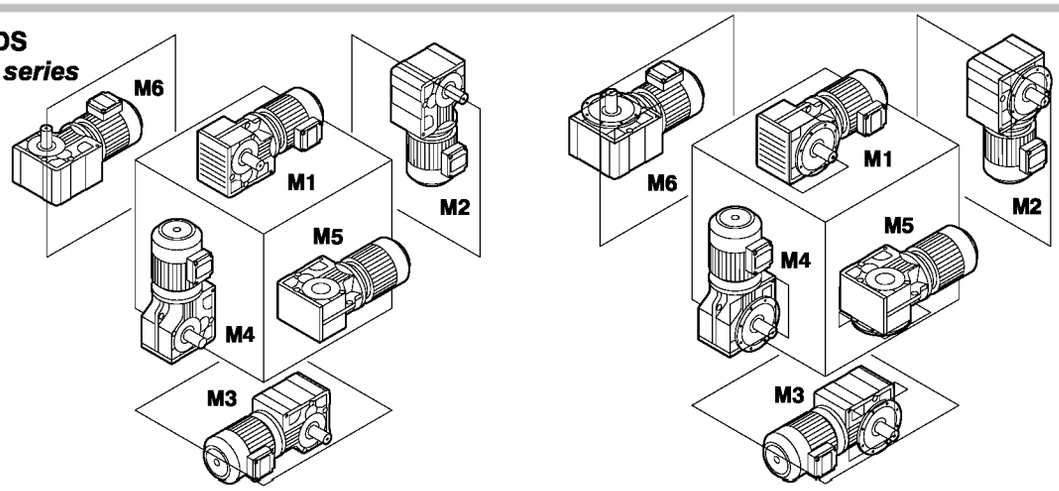

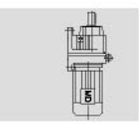
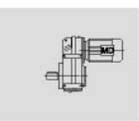
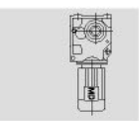
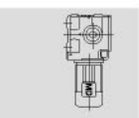

Istotne dane w zamówieniu
Important data in the order

W celu dokładnego i jednoznacznego ustalenia wersji napędu, zamówienie, oprócz pozycji pracy, powinno zawierać następujące dane:

- **Położenie skrzynki zaciskowej silnika**
- **Położenie dławnic kablowych w skrzynce zaciskowej silnika**
- W przypadku przekładni kątowych: **położenie wału wyjściowego (A/B/A+B)**
- W przypadku przekładni kątowych nasadzanych z pierścieniem zaciskowym: **strona montażowa z kołnierzem lub bez**
- W przypadku przekładni ze sprzęgłem jednokierunkowym RS: **kierunek obrotu na wyjściu**

The following order information is required for MDR/F/K/S gear units in addition to the mounting position, to precisely determine the drive design:

- ***Position of the motor terminal box***
- ***Cable entry position***
- *In right-angle gear units:* ***position of the output shaft and the output flange (A/B/A+B)***
- *In shaft mounted right-angle gear units with a shrink disk:* ***indicate whether the A or B-side is the output end***
- *In drives with a backstop RS:* ***direction of rotation of the output for the drive***

Położenie skrzynki zaciskowej silnika i dławnic kablowych
Position of the motor terminal box and cable entry

Zgodnie z normą EN60034, skrzynka zaciskowa silnika może znajdować się w położeniach:

- **"R"** (prawe) - alternatywne oznaczenie: **0°**,
- **"B"** (dół) - alternatywne oznaczenie: **90°**,
- **"L"** (lewe) - alternatywne oznaczenie: **180°**,
- **"T"** (góra) - alternatywne oznaczenie: **270°**,

patrząc od strony wału silnika (strona A). Dodatkowo możliwe jest wybranie położenia dławnic kablowych. Możliwe położenia oznaczono jako **"X"** (Normal), **"1"**, **"2"** i **"3"**.

According to the product standard EN60034, the position of the motor terminal box is specified as:

- ***"R"*** *(right) - alternative designation:* ***0°,***
- ***"B"*** *(bottom) - alternative designation:* ***90°,***
- ***"L"*** *(left) - alternative designation:* ***180°,***
- ***"T"*** *(top) - alternative designation:* ***270°,***

as viewed onto the motor shaft (A-side). The position of the cable entry can be selected as well. "X" (normal position), ***"1"***, ***"2"*** *or* ***"3"****. are possible, as shown in the following figures:*

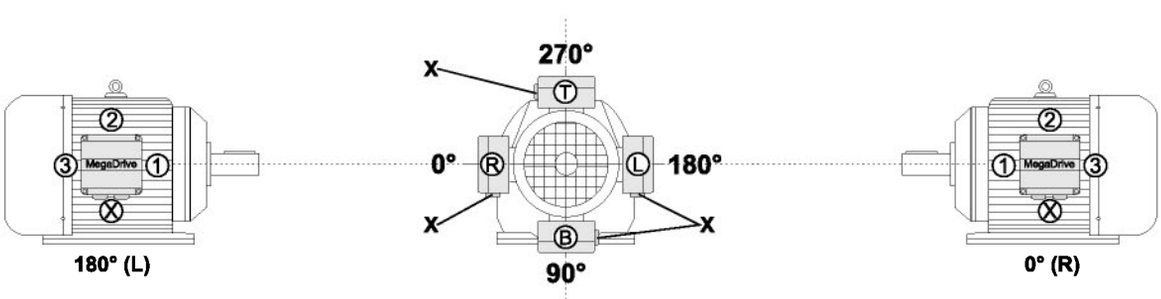

Jeżeli w zamówieniu nie zostaną sprecyzowane żadne informacje dotyczące skrzynki zaciskowej, silnik motoreduktora zostanie dostarczony w wersji "0°"/"R" z doprowadzeniem kabli "X" (Normal). W przypadku pozycji pracy M3 rekomendujemy wybór doprowadzenia kabli "2".

UWAGA:

- W przypadku motoreduktora MDR17D71 położenie skrzynki zaciskowej w poz. 90°/"B" jest niemożliwe
- W przypadku silnika DT71..BE możliwe są jedynie położenia doprowadzenia kabli "X" i "2".

Unless other information is given regarding to the terminal box, the "0°"/"R" with "X" (Normal) cable entry will be supplied. We recommend selecing entry "2" with mounting position M3.

PLEASE NOTE:

- *The terminal box cannot be positioned at 90°/"B" on MDR17D71 gearmotor*
- *Cable entry "X" and "2" are only possible with DT71..BE motor*

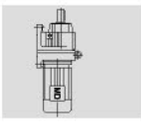
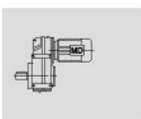
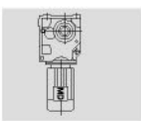
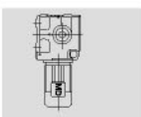

Kierunek obrotu na wyjściu - napęd z backstopem
Output direction of rotation with backstop

Jeżeli napęd posiada sprzęgło jednokierunkowe RS (Backstop), należy dodatkowo zaznaczyć żądany kierunek obrotu na wyjściu przekładni. Definiuje go sposób patrzenia na wał wyjściowy:

- CW - kierunek obrotu zgodny z ruchem wskazówek zegara
- CCW - kierunek obrotu przeciwny ruchowi wskazówek zegara

If the drive has a backstop RS, it is necessary to indicate the direction of rotation of the output for the drive. As viewed at the output shaft, the following definition applies:

- *CW - rotating clockwise*
- *CCW - rotating counterclockwise*

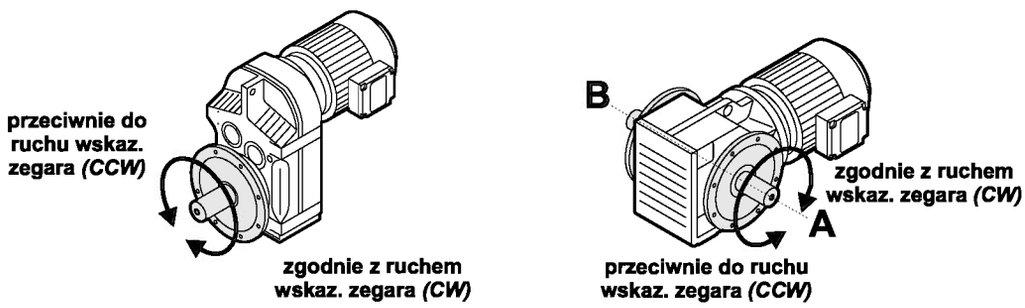

W przypadku przekładni kątowych należy zaznaczyć, czy kierunek obrotu został podany patrząc od strony A, czy B.

In the right-angle gear units, it is necessary to indicate whether the direction of rotation is given looking onto the A or B side.

Położenie wału wyjściowego i kołnierza
Position of the output shaft and the output flange

W przypadku przekładni kątowych należy podać położenie wału wyjściowego oraz kołnierza: **A lub B albo A+B**

In the right-angle gear units, it is necessary to indicate the position of the output shaft and the output flange: ***A or B or A+B***

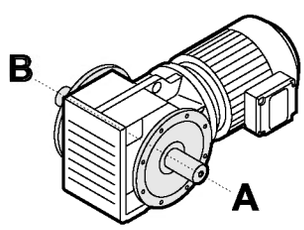

Położenie strony montażowej w przekładniach kątowych z pierścieniem zaciskowym
Position of the output end in right angle gear units with shrink disk

W przypadku przekładni kątowych nasadzanych z pierścieniem zaciskowym, należy również zaznaczyć, która strona (A czy B) jest stroną montażową oraz czy ma być ona wyposażona w kołnierz. Na poniższym rysunku pierścień zaciskowy znajduje się po przeciwnej strone (B), niż strona montażowa (A).

In shaft-mounted right-angle gear units with shrink disk, it is necessary to indicate whether the A or B end is the connection end. In the figure below, the A-side is the output end and the shrink disk is located on the opposite side (B).

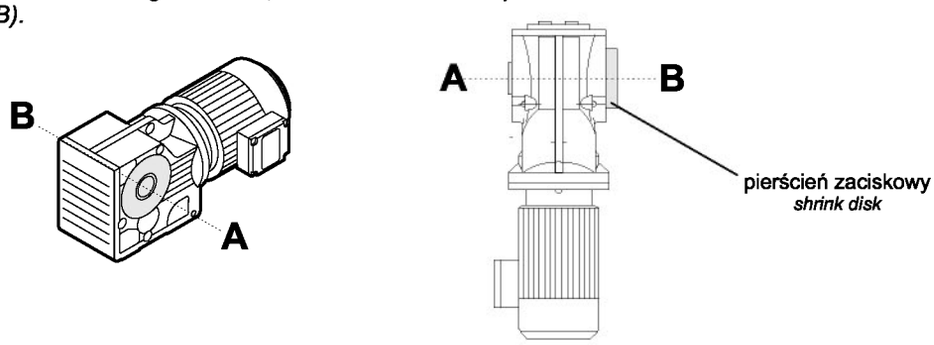

Przykład oznaczenia do zamówienia
Sample orders

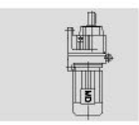
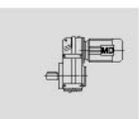
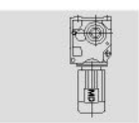
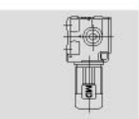

Typ przekładni (przykład) *Gearbox type (example)*	Pozycja pracy *Mounting position*	Położenie strony montażowej *Shaft position*	Położ. pierścienia zaciskowego *Shrink disk position*	Położ. kołnierza *Flange position*	Położenie skrzynki zaciskowej *Terminal box position*	Położenie dławnic kablowych *Cable entry position*	Kierunek obrotów na wyjściu *Direction of rotation of output*
MDKF47D71S4/RS	M5	A	-	B	0°	"Normal"	CW
MDSF97D180M4	M2	A+B	-	A+B	180°	"2"	-
MDKH107DS180S4	M1	-	B	-	270°	"3"	-

Używane symbole
Symbols used

Poniższa tabela przedstawia symbole używane w opisach pozycji pracy wraz z ich znaczeniem:
The following table shows the symbols used in the mounting position sheets and what they mean:

Symbol	Znaczenie	*Meaning*
	Zawór odpowietrzający	*Breather valve*
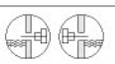	Korek poziomu oleju	*Oil level plug*
	Korek spustowy oleju	*Oil drain plug*

Straty wynikające z zanurzenia w środku smarnym
Churning loses

W przypadku niektórych pozycji pracy mogą nastąpić większe straty cieplne, wynikające z zanurzenia przekładni w środku smarnym. Prosimy o kontakt, jeśli wymagane jest zastosowanie poniższych kombinacji:

Churning loses may occur in some mounting positions. Please contact our company in case of the following combinations:

Pozycja pracy *Mounting position*	Typ przekładni *Gear unit type*	Wielk. przekładni *Gear unit size*	Prędkość obrotowa na wejściu przekładni *Input speed* [1/min]
M2,M4	MDR	97-107	>2500
		>107	>1500
M2,M3,M4,M5,M6	MDF	97-107	>2500
		>107	>1500
	MDK	77-107	>2500
		>107	>1500
	MDS	77-97	>2500

10.2. Oznaczenia pozycji skrzynki zaciskowej silnika oraz umiejscowienia korków (poziomu spustu odpowietrzenia) w serii MDR

10.2. Mounting position of terminal box and plugs in MDR series

MDR17~MDR187

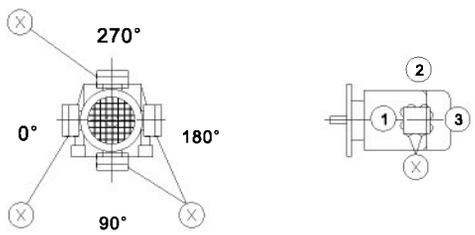

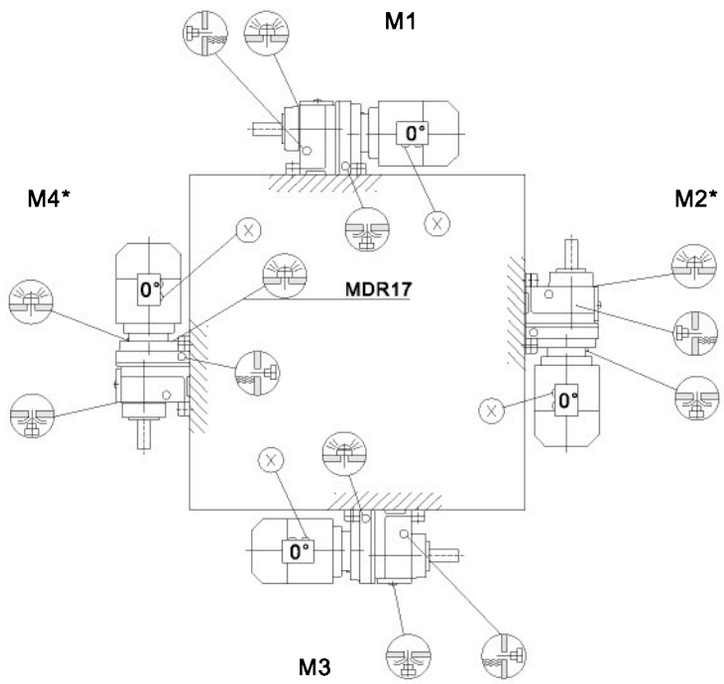

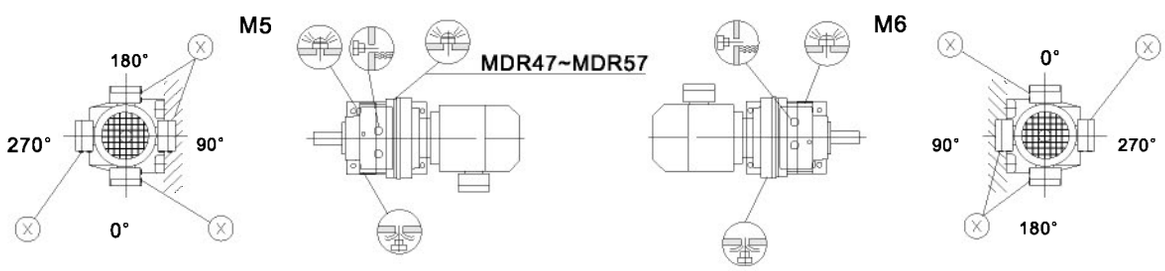

MDR17, MDR27  M1, M3, M5, M6

MDR47, MDR57  M5

MDR17, MDR27 

*Prosimy o zweryfikowanie informacji w rozdziale "Procedura doboru" odnośnie sił zewnętrznych działających na wał przekładni (s. 25).
**Please refer to the information in the "Project planning for drives" chapter, overhung and axial loads on gearbox shaft (page 25).*

MDRF17~MDRF187

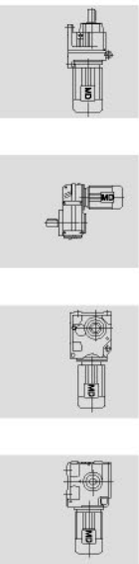

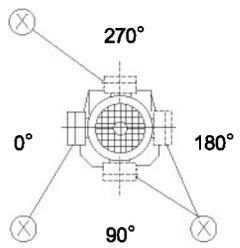

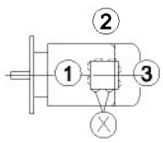

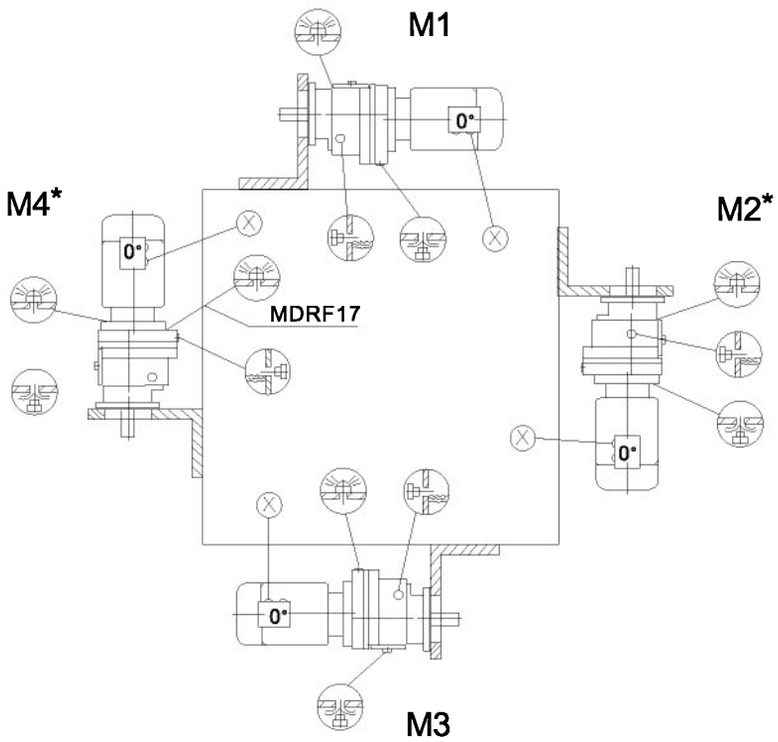

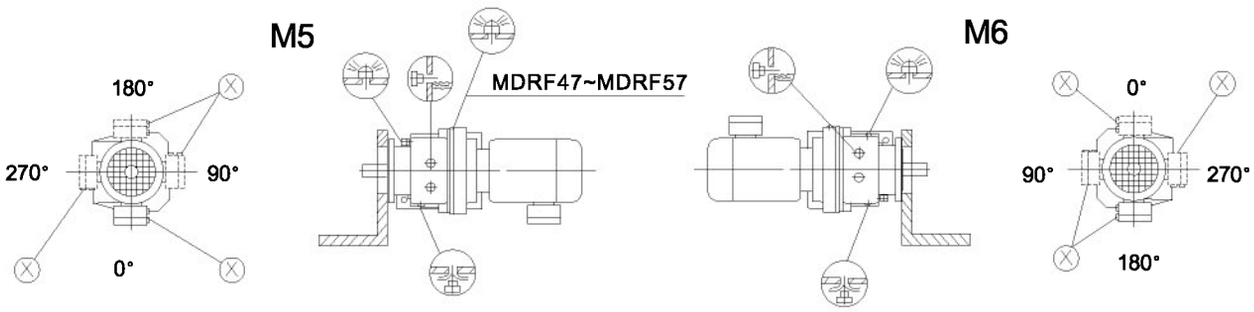

MDRF17, MDRF27  M1, M3, M5, M6

MDRF47, MDRF57  M5

MDRF17, MDRF27 

*Prosimy o zweryfikowanie informacji w rozdziale "Procedura doboru" odnośnie sił zewnętrznych działających na wał przekładni (s. 25).
Please refer to the information in the "Project planning for drives" chapter, overhung and axial loads on gearbox shaft (page 25).

MDR17F~MDR87F

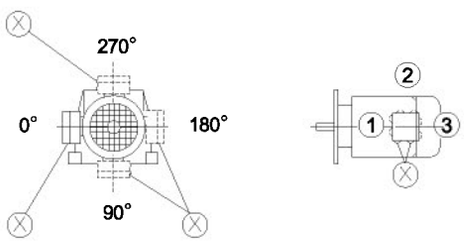

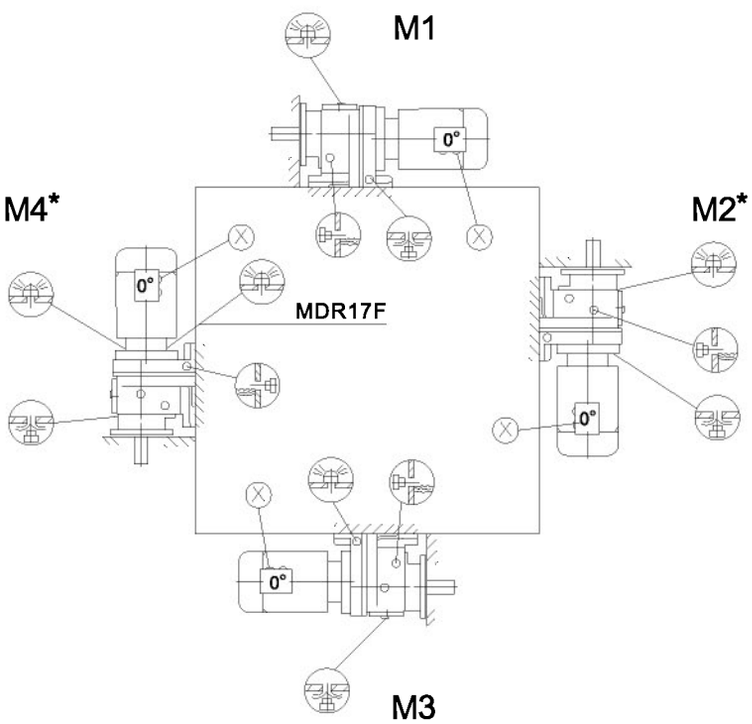

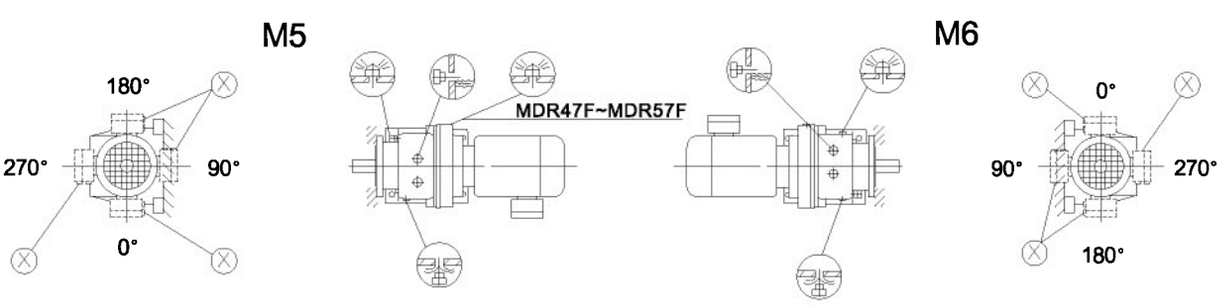

MDR17F, MDR27F		M1, M3, M5, M6
MDR47F, MDR57F		M5
MDR17F, MDR27F		

*Prosimy o zweryfikowanie informacji w rozdziale "Procedura doboru" odnośnie sił zewnętrznych działających na wał przekładni (s. 25).
**Please refer to the information in the "Project planning for drives" chapter, overhung and axial loads on gearbox shaft (page 25).*

MDRX57~MDRX107

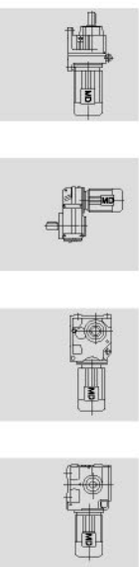

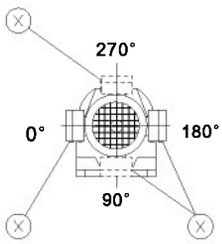

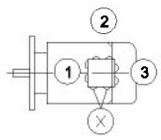

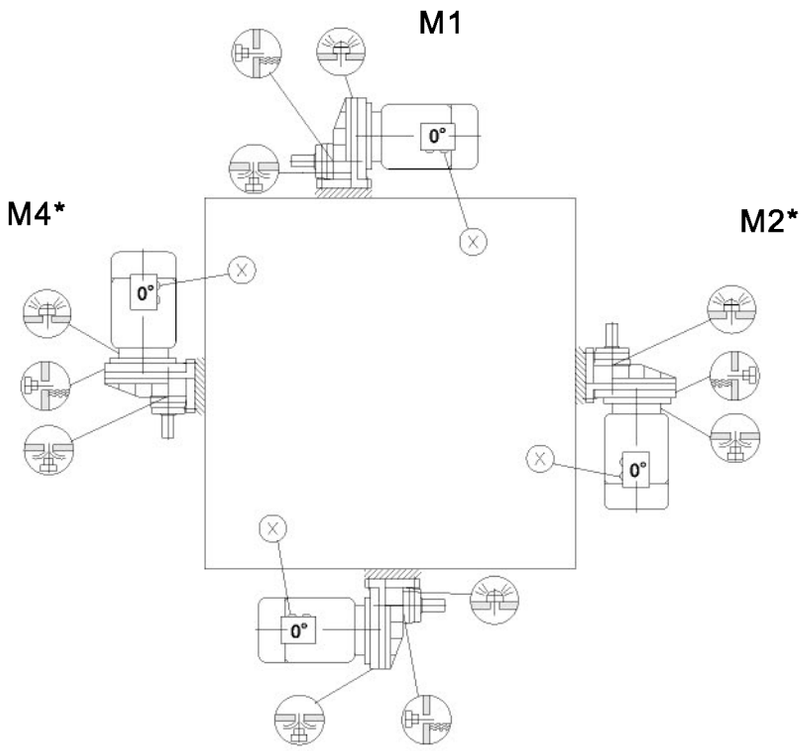

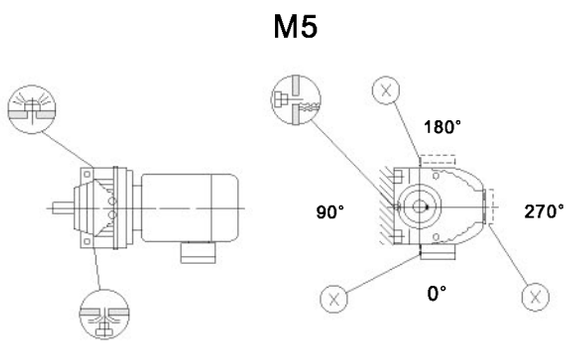

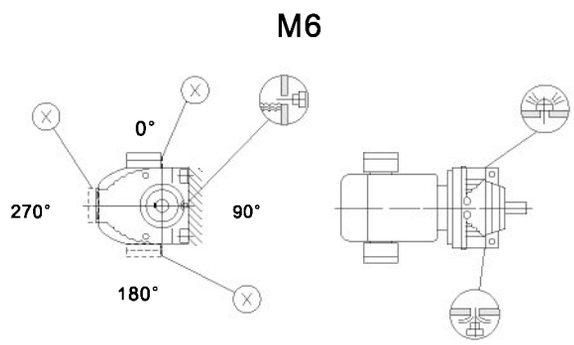

*Prosimy o zweryfikowanie informacji w rozdziale "Procedura doboru" odnośnie sił zewnętrznych działających na wał przekładni (s. 25).
Please refer to the information in the "Project planning for drives" chapter, overhung and axial loads on gearbox shaft (page 25).

MDRXF57~MDRXF107

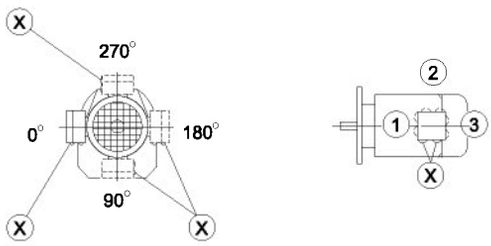

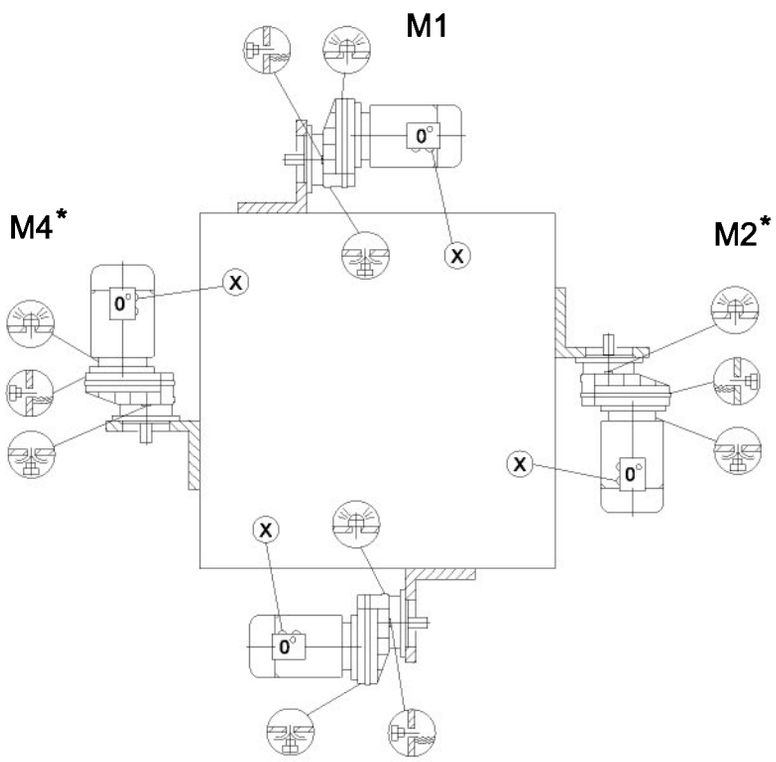

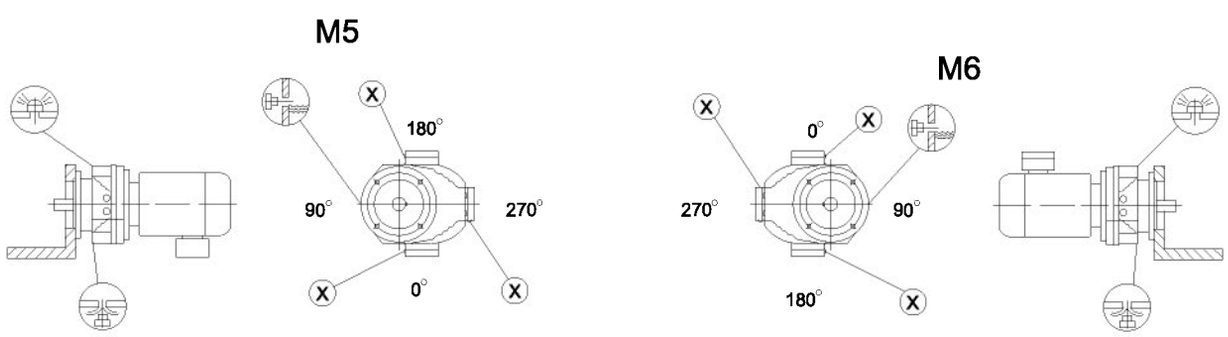

*Prosimy o zweryfikowanie informacji w rozdziale "Procedura doboru" odnośnie sił zewnętrznych działających na wał przekładni (s. 25).
Please refer to the information in the "Project planning for drives" chapter, overhung and axial loads on gearbox shaft (page 25).

10.3. Oznaczenia pozycji skrzynki zaciskowej silnika oraz umiejscowienia korków (poziomu spustu odpowietrzenia) w serii MDF

10.3. Mounting position of terminal box and plugs in MDF series

MDF/FA..B/FH27B~177B, MDFV27B~107B

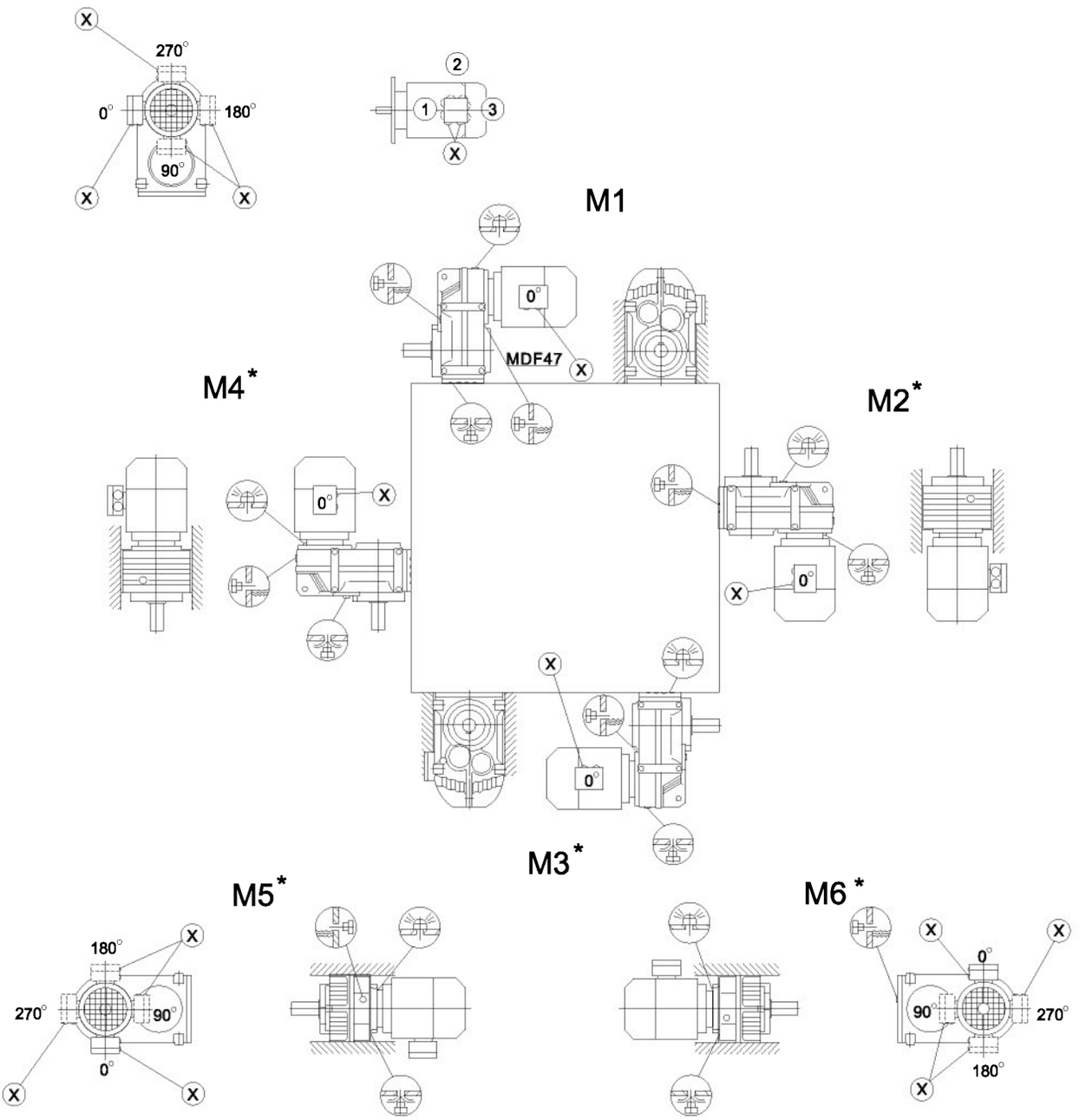

MDF..27		M1, M3, M5, M6
MDF..27		M1~ M6
MDF..27		M1, M3, M5, M6

*Prosimy o zweryfikowanie informacji w rozdziale "Procedura doboru" odnośnie sił zewnętrznych działających na wał przekładni (s. 25).

**Please refer to the information in the "Project planning for drives" chapter, overhung and axial loads on gearbox shaft (page 25).*

MDFF/FAF/FHF/FAZ/FHZ27-177, MDFVF/FVZ27-107

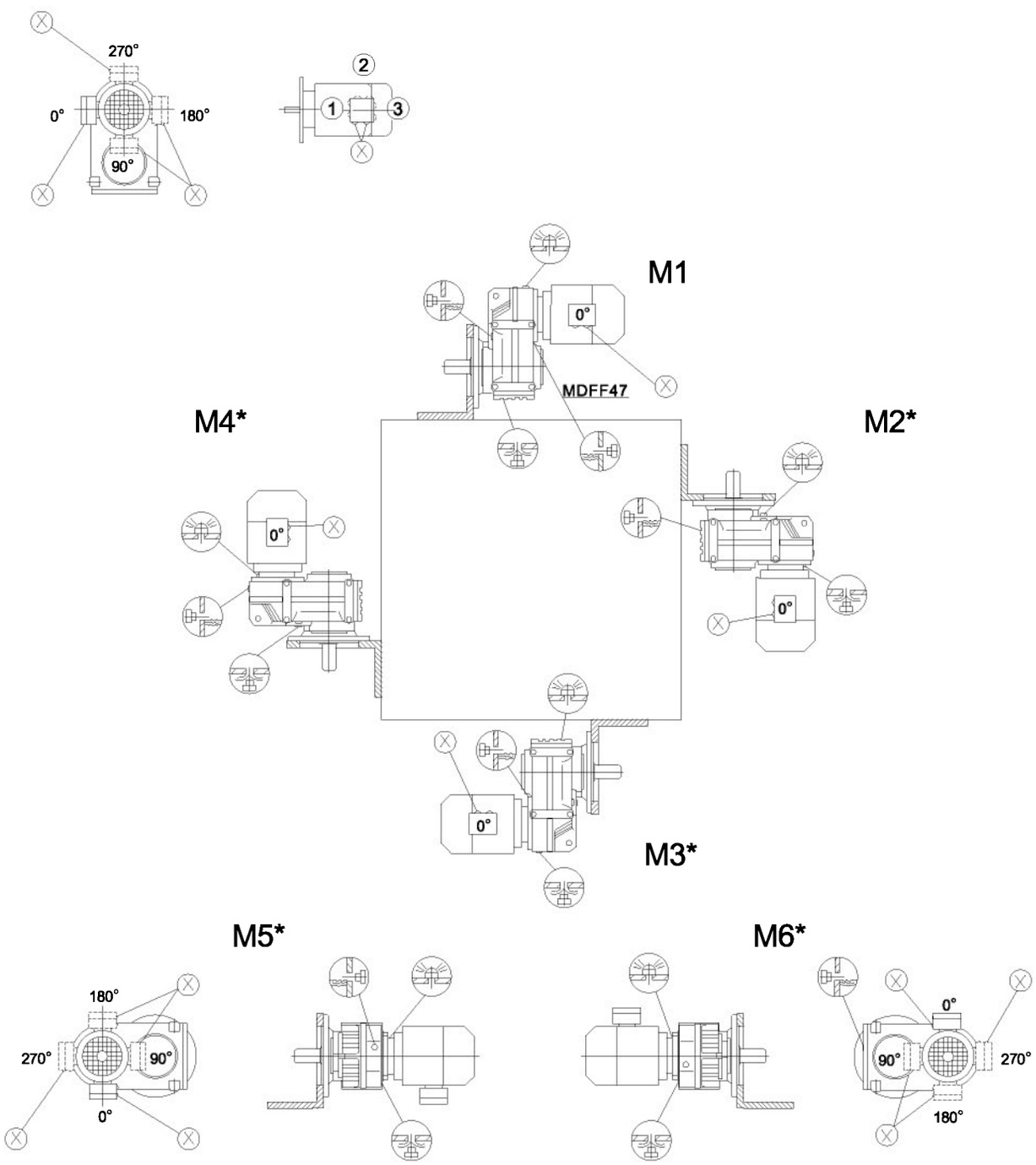

MDF..27		M1, M3, M5, M6
MDF..27		M1~M6
MDF..27		M1, M3, M5, M6

*Prosimy o zweryfikowanie informacji w rozdziale "Procedura doboru" odnośnie sił zewnętrznych działających na wał przekładni (s. 25).
*Please refer to the information in the "Project planning for drives" chapter, overhung and axial loads on gearbox shaft (page 25).

MDFA/FH27-177, MDFV27-107

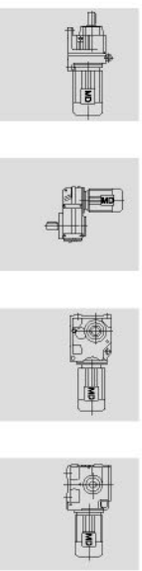

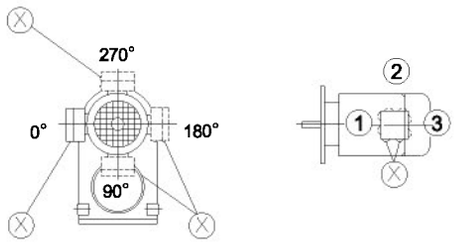

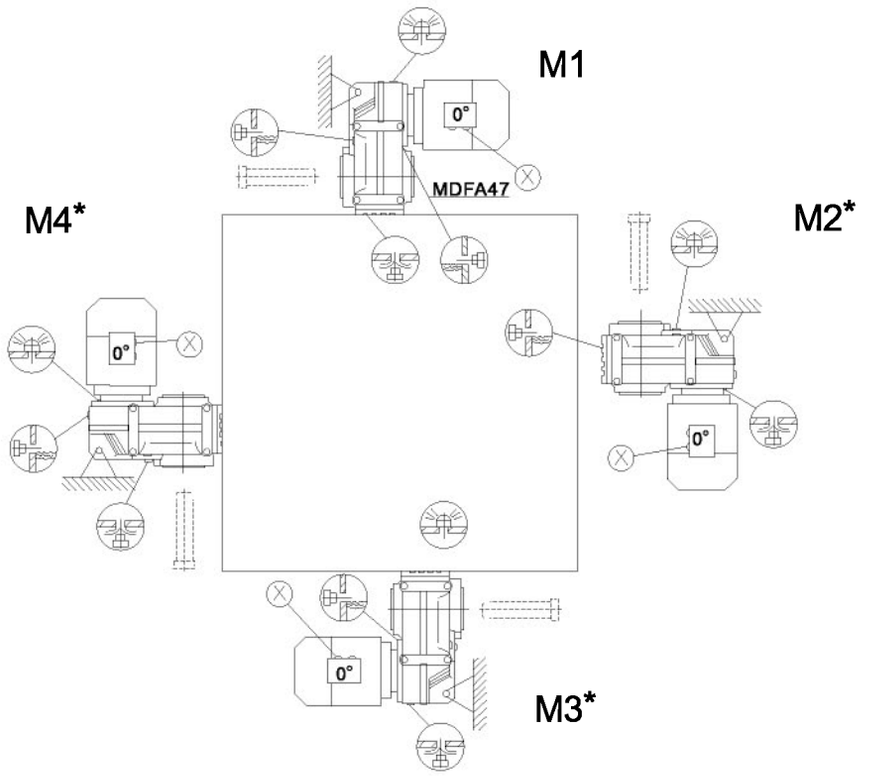

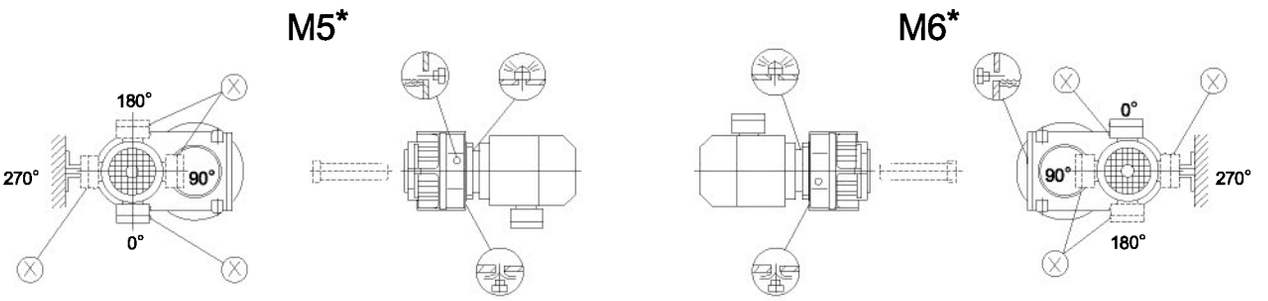

MDF..27		M1, M3, M5, M6
MDF..27		M1~M6
MDF..27		M1, M3, M5, M6

*Prosimy o zweryfikowanie informacji w rozdziale "Procedura doboru" odnośnie sił zewnętrznych działających na wał przekładni (s. 25).
Please refer to the information in the "Project planning for drives" chapter, overhung and axial loads on gearbox shaft (page 25).

10.4. Oznaczenia pozycji skrzynki zaciskowej silnika oraz umiejscowienia korków (poziomu spustu odpowietrzenia) w serii MDK

10.4. Mounting position of terminal box and plugs in MDK series

MDK/KA..B/KH47B~157B, MDKV47B~107B

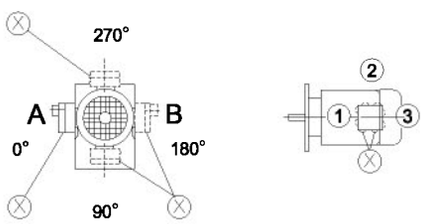

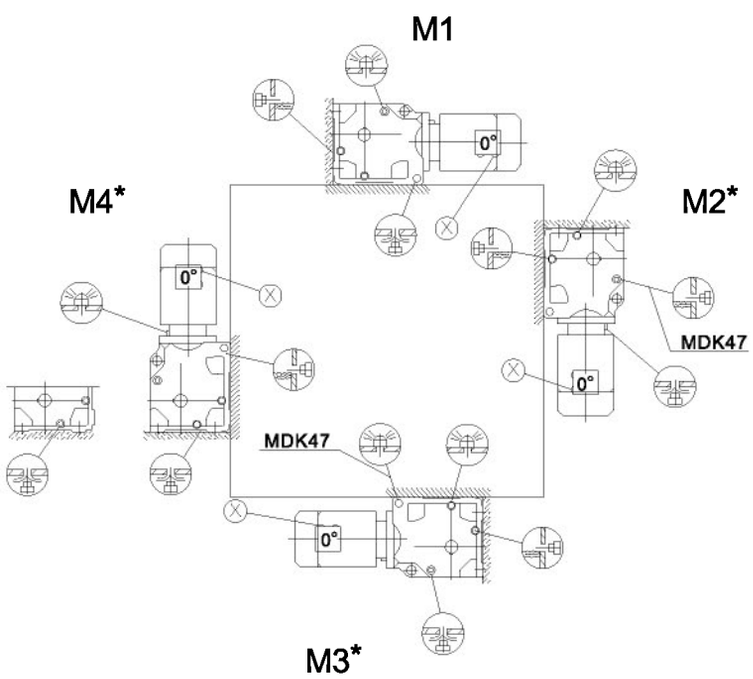

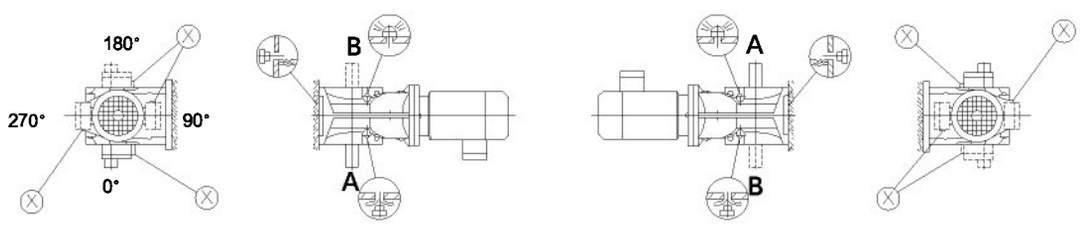

*Prosimy o zweryfikowanie informacji w rozdziale "Procedura doboru" odnośnie sił zewnętrznych działających na wał przekładni (s. 25).
**Please refer to the information in the "Project planning for drives" chapter, overhung and axial loads on gearbox shaft (page 25).*

MDK167~187, MDKH167B~187B

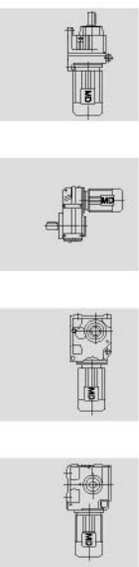

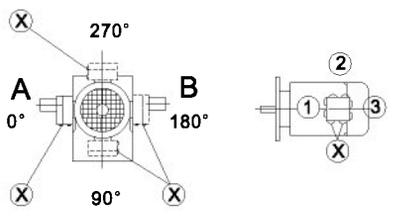

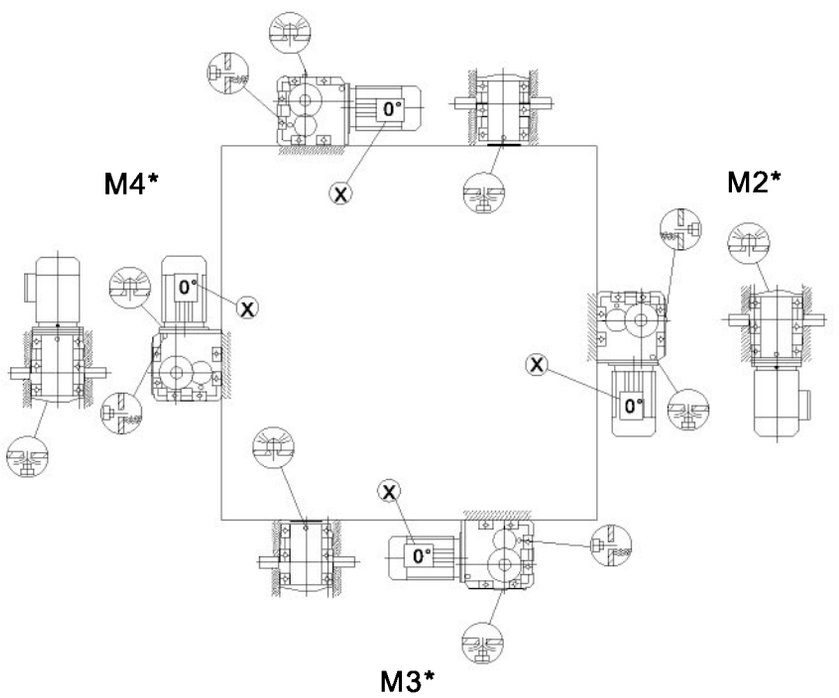

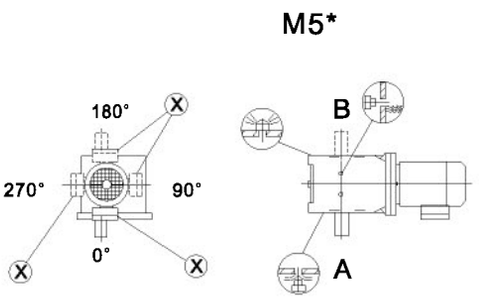

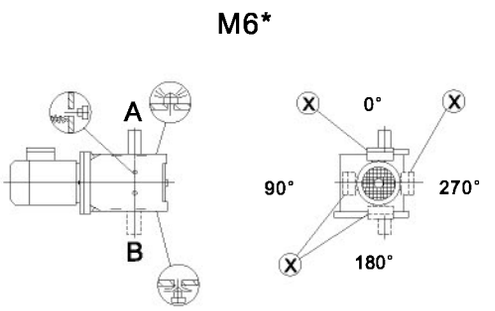

*Prosimy o zweryfikowanie informacji w rozdziale "Procedura doboru" odnośnie sił zewnętrznych działających na wał przekładni (s. 25).
Please refer to the information in the "Project planning for drives" chapter, overhung and axial loads on gearbox shaft (page 25).

MDKF/KAF/KAZ/KHZ37~157, MDKVF/KVZ37~107

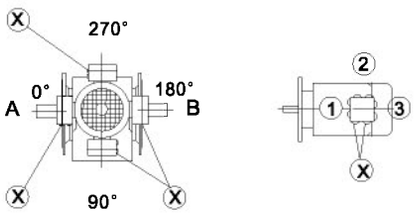

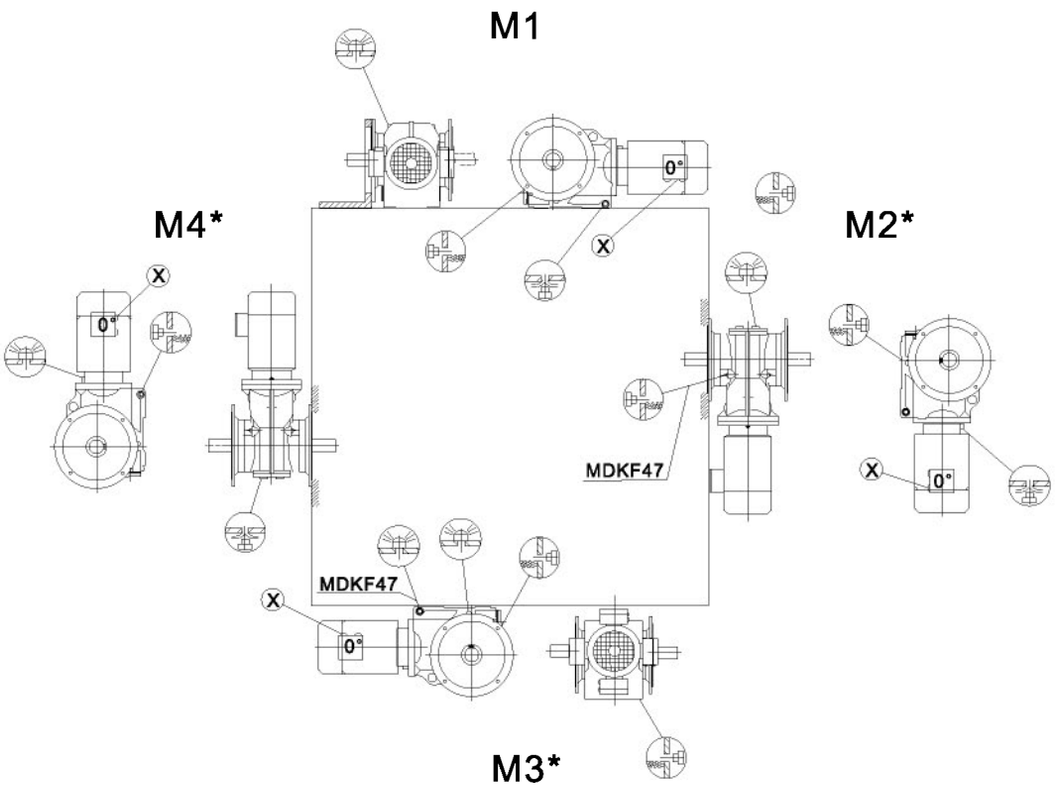

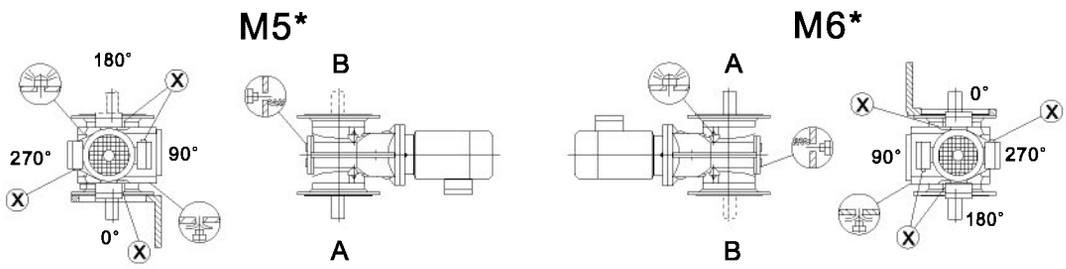

*Prosimy o zweryfikowanie informacji w rozdziale "Procedura doboru" odnośnie sił zewnętrznych działających na wał przekładni (s. 25).
Please refer to the information in the "Project planning for drives" chapter, overhung and axial loads on gearbox shaft (page 25).

MDKA/KH37~157, MDKV37~107

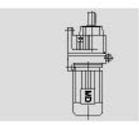

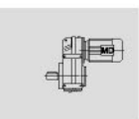

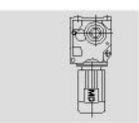

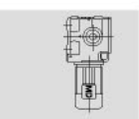

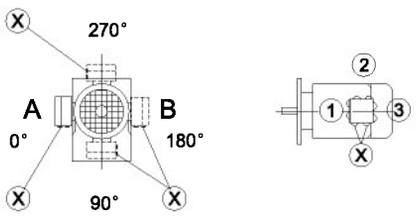

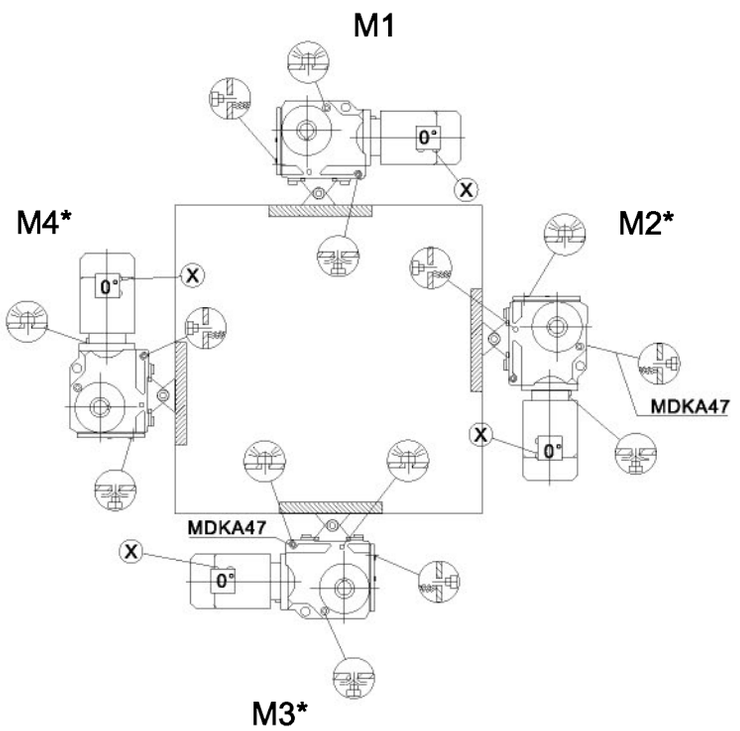

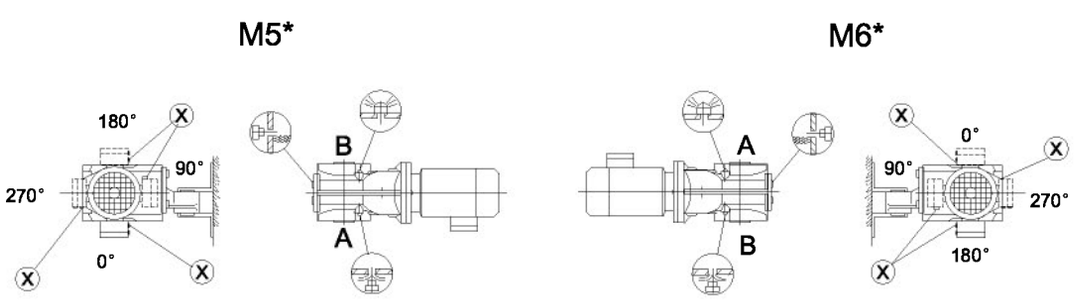

*Prosimy o zweryfikowanie informacji w rozdziale "Procedura doboru" odnośnie sił zewnętrznych działających na wał przekładni (s. 25).
**Please refer to the information in the "Project planning for drives" chapter, overhung and axial loads on gearbox shaft (page 25).*

MDKH167~MDKH187

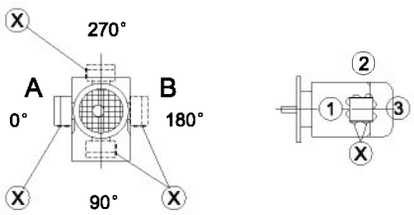

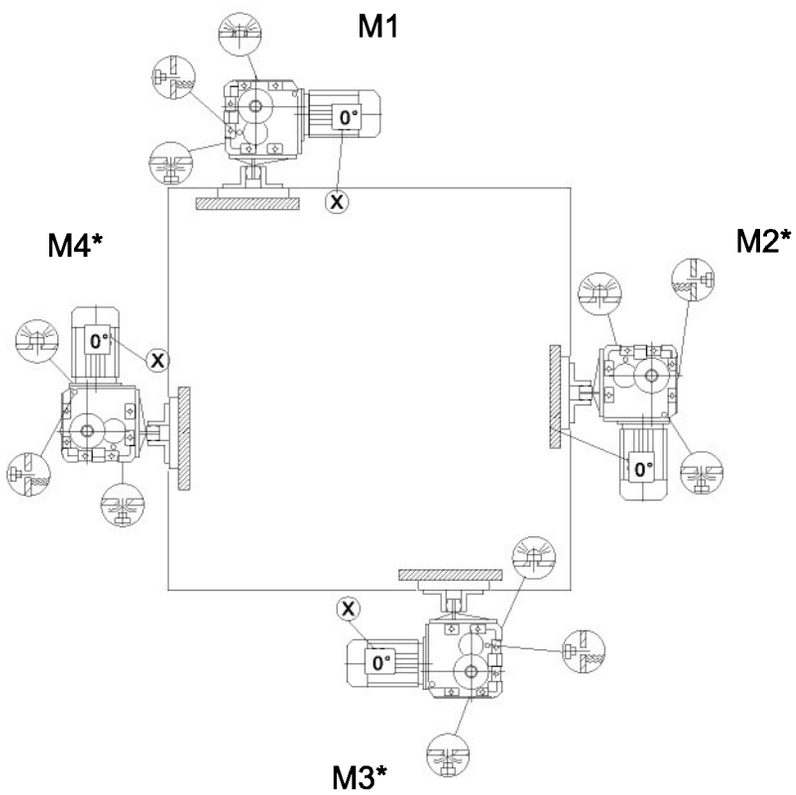

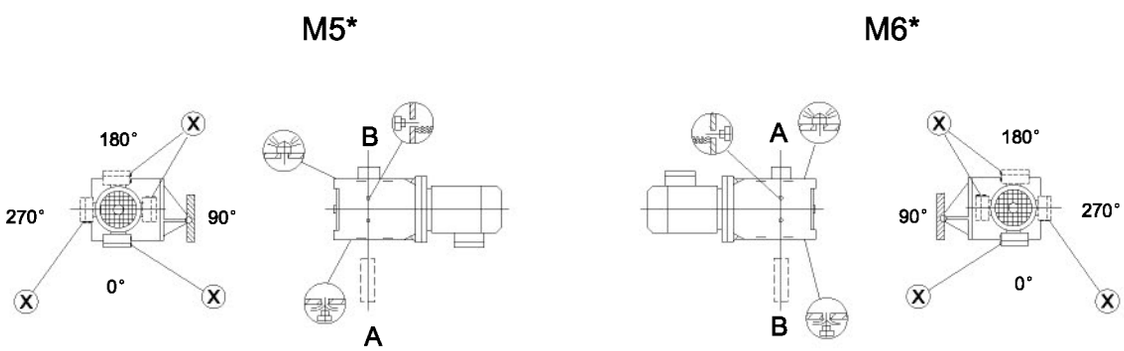

*Prosimy o zweryfikowanie informacji w rozdziale "Procedura doboru" odnośnie sił zewnętrznych działających na wał przekładni (s. 25).
**Please refer to the information in the "Project planning for drives" chapter, overhung and axial loads on gearbox shaft (page 25).*

10.5. Oznaczenia pozycji skrzynki zaciskowej silnika oraz umiejscowienia korków (poziomu spustu odpowietrzenia) w serii MDS

10.5. Mounting position of terminal box and plugs in MDS series

MDS37

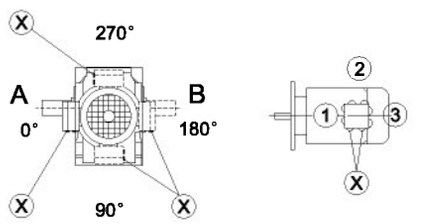

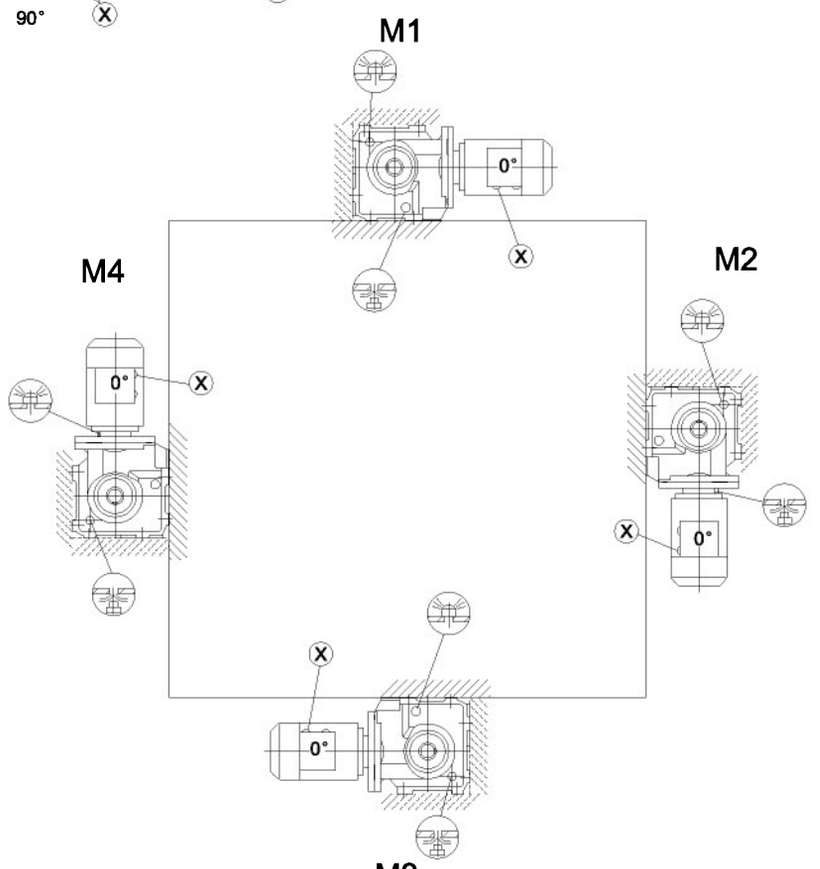

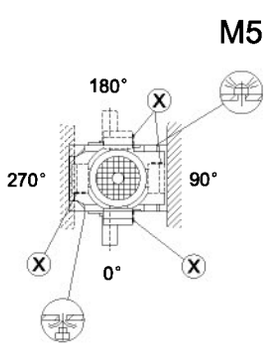

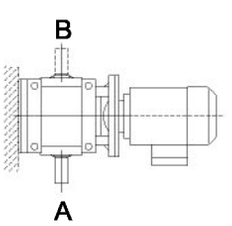

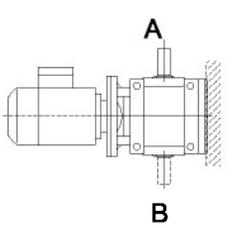

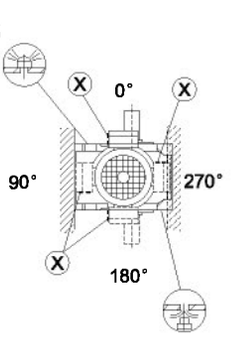

MDS47~MDS97

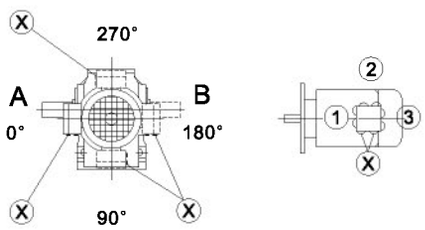

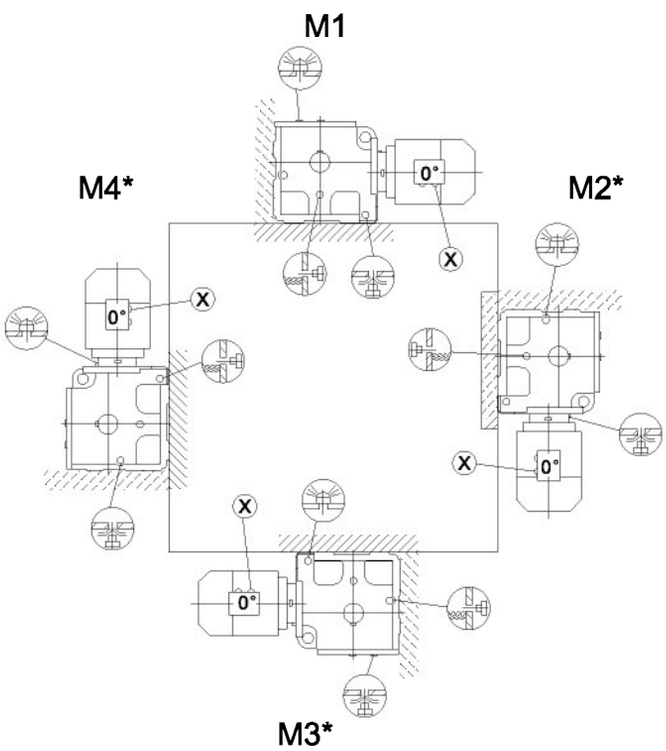

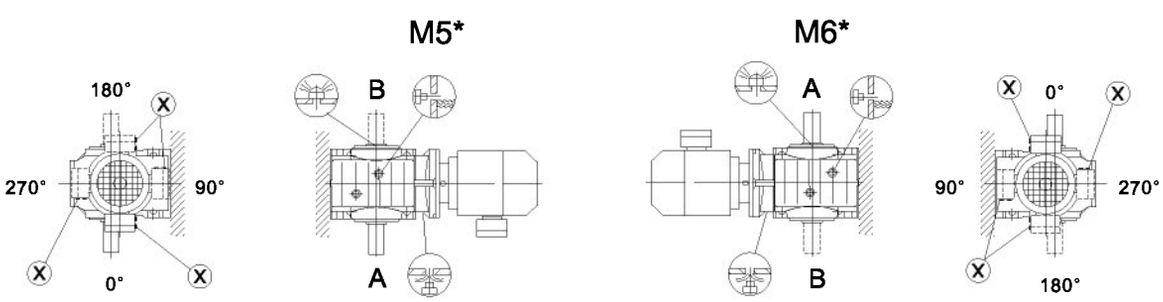

*Prosimy o zweryfikowanie informacji w rozdziale "Procedura doboru" odnośnie sił zewnętrznych działających na wał przekładni (s. 25).
**Please refer to the information in the "Project planning for drives" chapter, overhung and axial loads on gearbox shaft (page 25).*

MDSF/SAF/SHF37

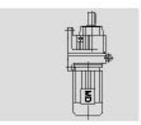

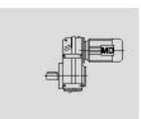

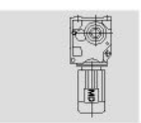

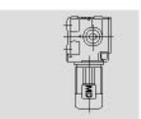

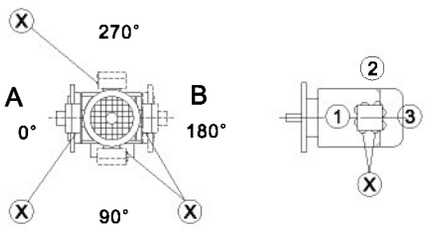

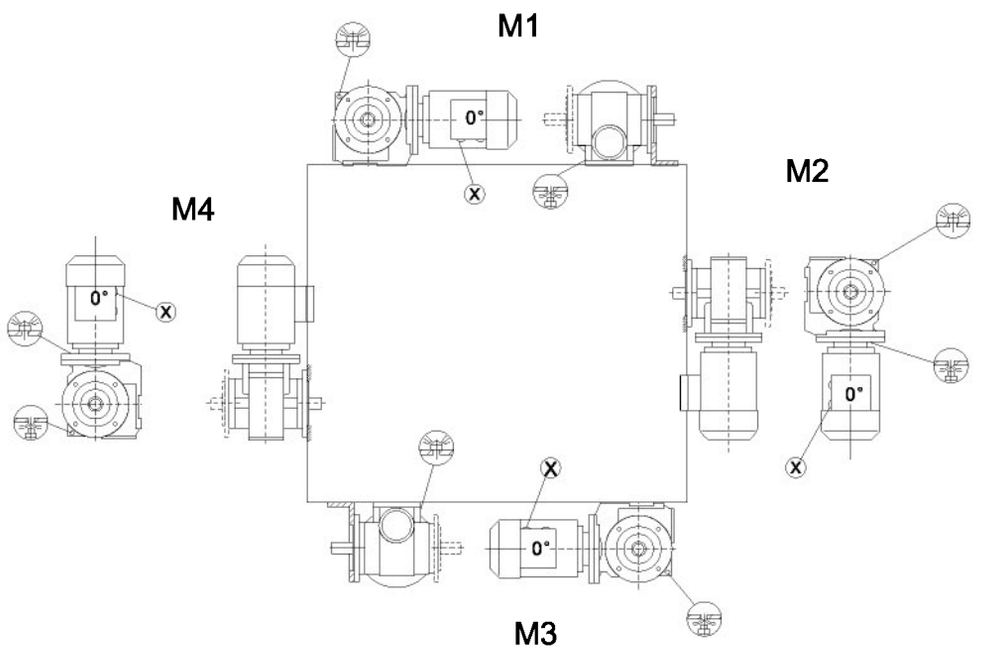

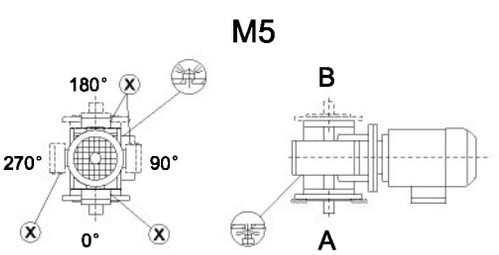

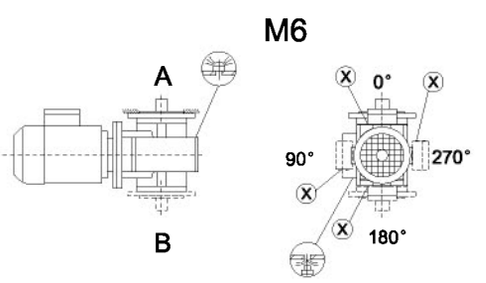

MDSF/SAF/SHF/SAZ/SHZ47..~MDSF/SAF/SHF/SAZ/SHZ97..

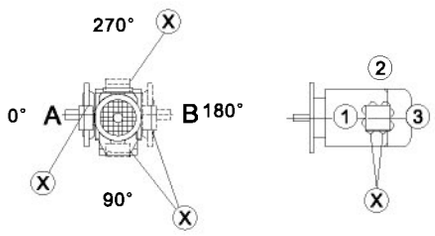

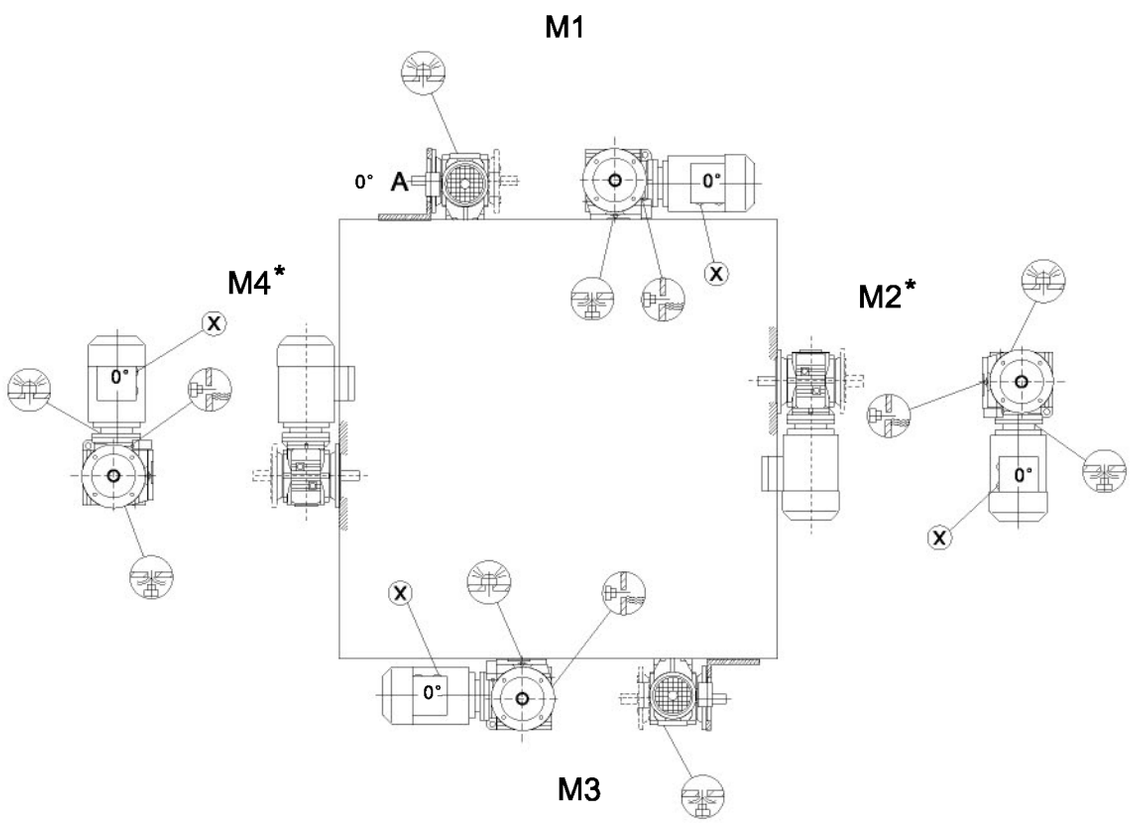

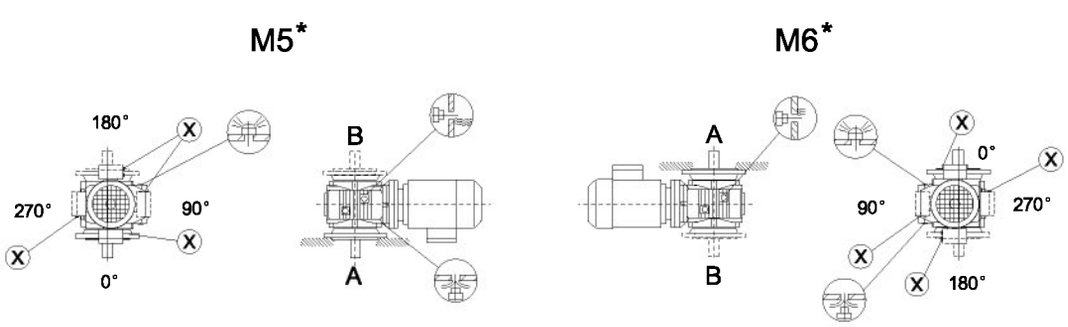

*Prosimy o zweryfikowanie informacji w rozdziale "Procedura doboru" odnośnie sił zewnętrznych działających na wał przekładni (s. 25).
*Please refer to the information in the "Project planning for drives" chapter, overhung and axial loads on gearbox shaft (page 25).

MDSA/SH37

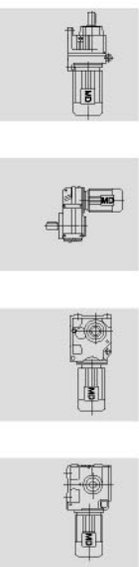

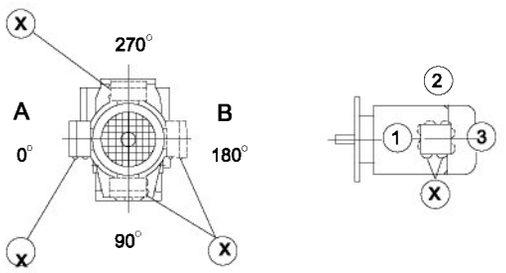

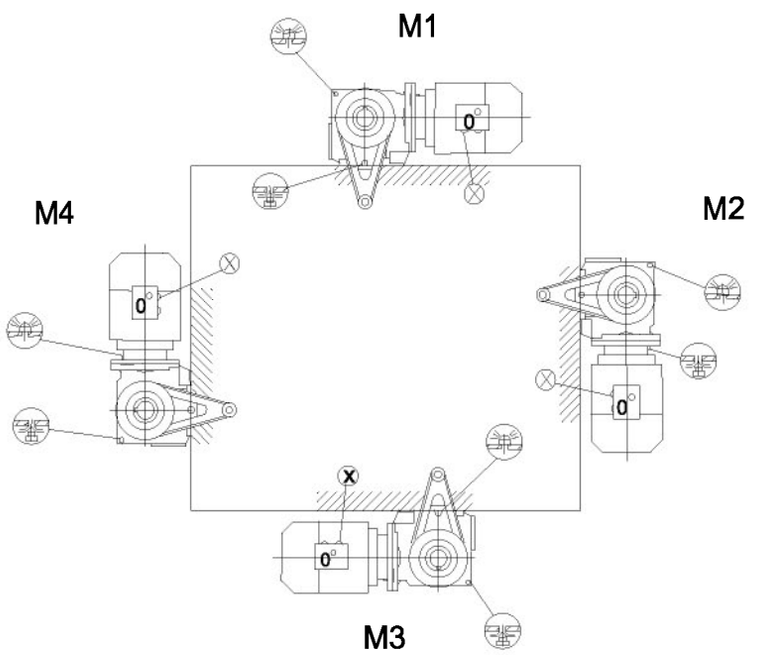

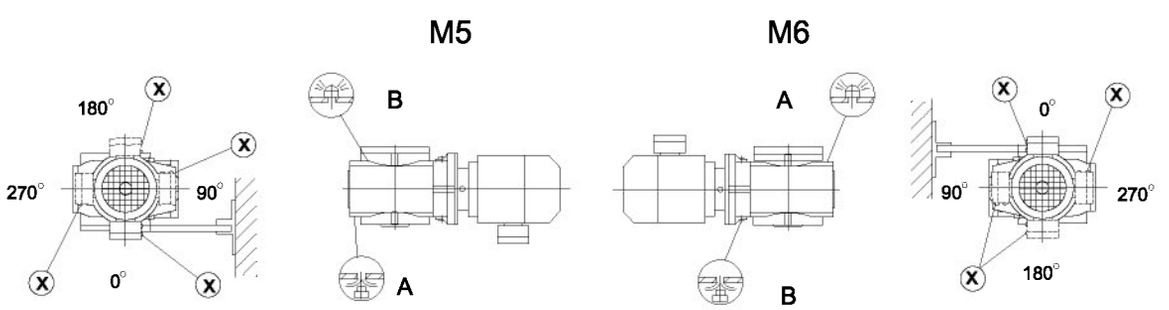

MDSA/SH47..~MDSA/SH97..

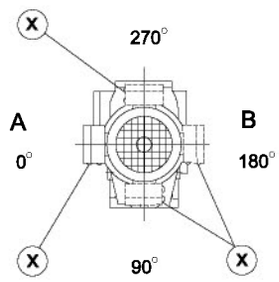

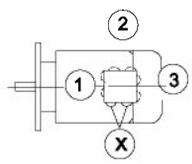

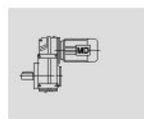

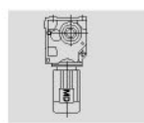

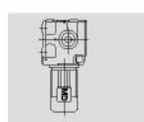

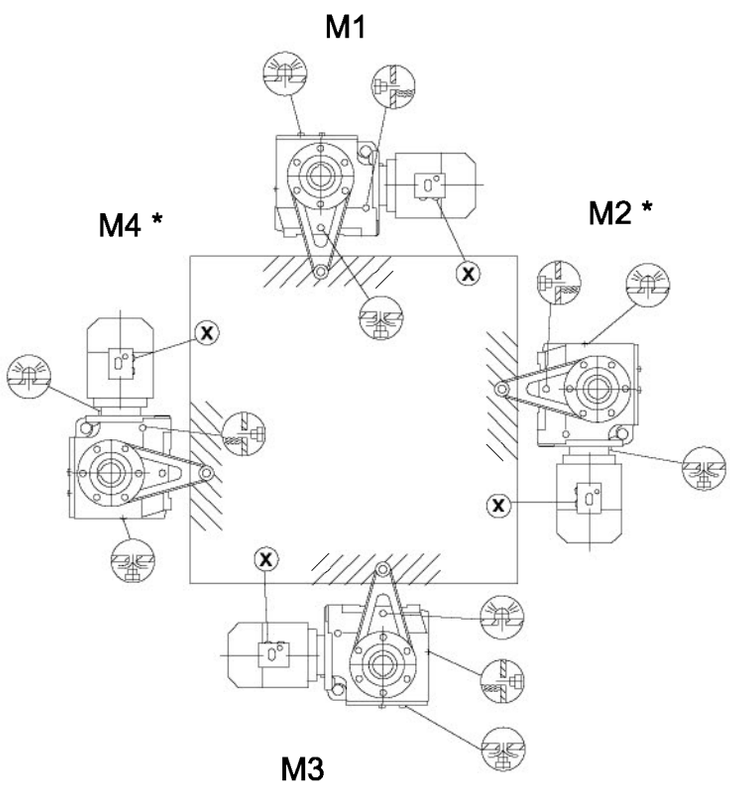

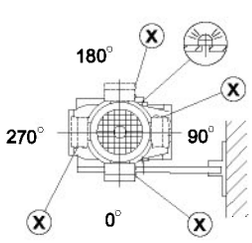

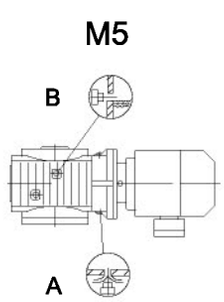

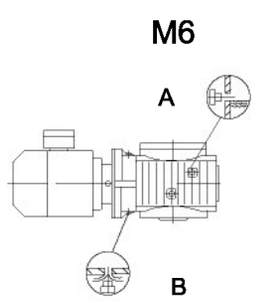

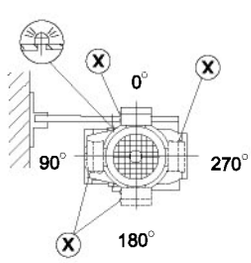

*Prosimy o zweryfikowanie informacji w rozdziale "Procedura doboru" odnośnie sił zewnętrznych działających na wał przekładni (s. 25).
Please refer to the information in the "Project planning for drives" chapter, overhung and axial loads on gearbox shaft (page 25).

11. Informacje do tabel wymiarowania
11. Information on dimension sheets

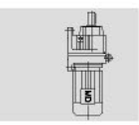

Zakres dostawy
Scope of classification

= Części standardowe dostarczane przez MegaDrive
Standard parts supplied by MegaDrive

= Części standardowe niedostarczane przez MegaDrive
Standard parts unsupplied by MegaDrive

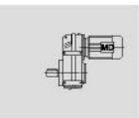

Tolerancja wysokości wału
Shaft heights tolerances

h ≤ 250 mm ~ -0.5mm
h > 250 mm ~ -1.0mm

Przekładnie z łapami: należy zwrócić uwagę, czy obrys silnika nie wystaje poza obrys powierzchni mocującej.
Foot-mounted gear units: the motor may project below the mounting surface when fitted, please check.

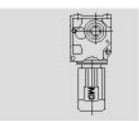

Czopy końcowe wału
Shaft ends

Tolerancja średnicy
Diameter tolerance
Φ ≤ 50 mm ~ ISO k6
Φ > 50 mm ~ ISO m6

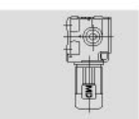

Otwory centryczne w nakiełkach zgodnie z DIN332, forma DR:
Center holes in accordance with DIN332, shape DR:

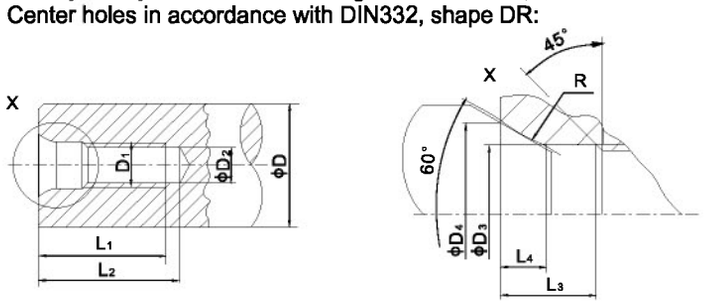

Średnica wału wyjściowego *Diameter of output shaft*	D_1	D_2	D_3	D_4	R	L_1 +2	L_2 min	L_3	L_4 ≈
Φ D = 7 - 10 mm	M3	2.5	3.2	5.3	4.0	9.0	12.0	2.6	1.8
Φ D > 10 - 13 mm	M4	3.3	4.3	6.7	5.0	10.0	14.0	3.2	2.1
Φ D > 13 - 16 mm	M5	4.2	5.3	8.1	6.3	12.5	17.0	4.0	2.4
Φ D > 16 - 21 mm	M6	5.0	6.4	9.6	8.0	16.0	21.0	5.0	2.8
Φ D > 21 - 24 mm	M8	6.8	8.4	12.2	10.0	19.0	25.0	6.0	3.3
Φ D > 24 - 30 mm	M10	8.5	10.5	14.9	16.0	22.0	30.0	7.5	3.8
Φ D > 30 - 38 mm	M12	10.2	13.0	18.1	20.0	28.0	37.0	9.5	4.4
Φ D > 38 - 50 mm	M16	14.0	17.0	23.0	25.0	36.0	45.0	12.0	5.2
Φ D > 50 - 85 mm	M20	17.5	21.0	28.4	31.5	42.0	53.0	15.0	6.4
Φ D > 85 - 130 mm	M24	21.0	25.0	34.2	40.0	50.0	63.0	18.0	8.0
Φ D > 130 mm	M30	26.5	31.0	42.6	50.0	63.0	85.0	20.0	10.0

Na życzenie wykonanie w GB lub ISO.
If you need GB or ISO standard, please contact us.

Wały drążone
Hollow shafts

Tolerancja średnicy
Diameter tolerance
Φ ~ ISO H7 mierzona za pomocą sprawdzianu trzpieniowego *(measured with plug gauge)*

Wpusty: wykonanie zgodnie z normą DIN 6885 (wysoka forma)
Keys: in accordance to DIN 6885 (domed type)

Wały drążone z wielowypustem
Multiple-spline shafts

D_m Średnica krążków mierniczych *(Measuring roller diameter)*
M_e Przymiar kontrolny *(Inspection size)*

Kołnierze
Flanges

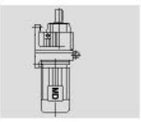

Tolerancja centrowania
Centering shoulder tolerance
Φ ≤ 230 mm (wielkość kołnierza *(flange size)* A120 - A300) ~ ISO j6
Φ > 230 mm (wielkość kołnierza *(flange size)* A350 - A660) ~ ISO h6

W przypadku przekładni zębatych walcowych oraz indukcyjnych silników trójfazowych (również z hamulcem i przeciwwybuchowych) wystepują trzy rozmiary kołnierza dla każdej pozycji pracy. Dostępne kołnierze dla każdej wielkości zaprezentowane są w tabeli poniżej.

Up to three different flange dimensions are available for each size of helical gear units, AC (brake) motors and explosion-proof AC (brake) motor. The possible flanges for each size are shown in the relevant dimension sheet.

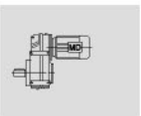

Śruby pierścieniowe, uchwyty nośne
Lifting eyes, eyebolts

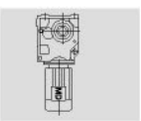

Małe przekładnie walcowe i silniki do wielkości D100 są dostarczane bez specjalnych uchwytów transportowych. W pozostałych przypadkach przekładnie i silniki są wyposażone w odlane uchwyty nośne, przykręcane ucha śrubowe lub przykręcane śruby z uchem.

MDR17~MDR27 helical gear units and motors up to size D100 are delivered without special transportation fixtures. All other gear unitsand motors are equipped with cast-on lifting eyes, screw-on lifting eyes or screw-on eyeballs.

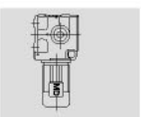

Typ przekładni/silnika *Gear unit/gear motor type*	Przykręcane (screw-on)		Odlane uchwyty nośne *(cast-on eyebolts)*
	Ucho śrubowe *(eyebolts)*	Śruba z uchem *(lifting eyes)*	
MDR/MDRF37~57, MDRX/MDRXF57~67	–	●	–
MDR67~167	●	–	–
MDF37~157	–	–	●
MDK37~157	–	–	●
MDK167~187	●	–	–
MDS37~47	–	●	–
MDS57~97	–	–	●
≥D112	●	–	–

Odpowietrzniki
Breather valves

Uproszczone rysunki z wymiarami przekładni zawsze zawierają korki zaślepiające. Zależnie od zamówionej pozycji pracy (M1-M6) dany korek zostaje faktycznie zastąpiony przez odpowietrznik. Z tego powodu może dojść do niewielkich zmian wymiarów obrysu przekładni.

The gear unit dimension drawings always show screw plugs. The corresponding screw plug is replaced by an activated breather valve at the factory depending on which mounting position M1-M6 is ordered. This means the contour dimensions may be slightly different.

Połączenie pierścienia zaciskowego
Shrink disk connection

W przypadku przekładni z wałem drążonym i pierścieniem zaciskowym, na życzenie można uzyskać szczegółowe dane techniczne pierścienia.

Hollow shaft gear unit with shrink disk connection: if required, please request a detailed data sheet on shrink disks.

Wał drążony wielowypustowy
Splined hollow shaft

Przekładnie z wałem drążonym wielowypustowym serii MDFV i MDKV o wielkościach 37-107 dostarczane są z wielowypustem zgodnie ze standardem DIN.

Hollow shaft gear units MDFV and MDKV series in sizes 37-107 are supplied with a splined hollow shaft according to standard DIN.

Odbojnik gumowy dla MDFA/FH/FV
Rubber buffer for MDFA/FH/FV

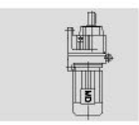

Wartość naprężenia gumowego odbojnika przez wskazanie wartości ugięcia ΔL, możliwe do uzyskania na życzenie.

Preload rubber buffer by the indicated value ΔL. The characteristic curve of the rubber buffers is available on request.

Silniki z hamulcem
Brake motors

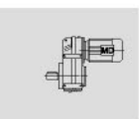

W silnikach elektrycznych z hamulcem, wymiar długości KM przyjmuje wartość L1, z obcym chłodzeniem przyjmuje wartość L2, a z hamulcem i obcym chłodzeniem przyjmuje wartość L3.

In brake motors, length dimension KM takes the L1 value, with forced cooling fan takes L2 value and with brake and forced cooling fan takes L3 value.

Opcje silnika
Motor accessory

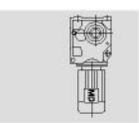

Wymiary silnika mogą się różnić po zastosowaniu dodatkowych opcji. Należy sprawdzić wymiary konstrukcyjne opcji do silnika.

The motor dimensions may change after installing motor accesories. Please refer to the dimension drawings of the motor accessory.

Wersje specjalne
Special versions

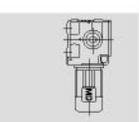

Wymiary skrzynki zaciskowej w wersjach specjalnych (np. KS lub CSA) mogą się różnić w stosunku do standardowych wymiarów.

The dimensions of the terminal box on special versions (such as KS or CSA) may be very different from the standard dimensions

Notatki / *notes*

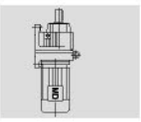

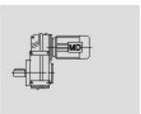

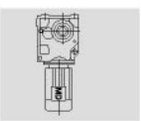

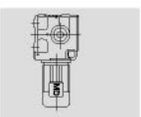

Notatki / *notes*

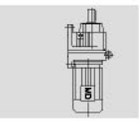

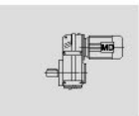

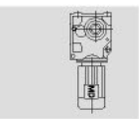

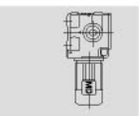

Wersja PL/EN 1.2

MegaDrive
Intelligent Drive Solutions

MegaDrive Sp. z o.o.

Biuro i magazyn
***(Office and warehouse)*:**
98-300 Wieluń, ul. Sieradzka 62
Polska *(Poland)*
Telefon *(Telephone)*:
+48 885 884 854 +48 43 821 89 85
E-mail:
biuro@megadrive.com.pl

www.megadrive.com.pl